國立交通大學

資訊科學與工程研究所

博士論文

IEEE802.16 WiMAX 網路下無接縫移動機制之研究與設計

Study and Design of Seamless Mobility Scheme for IEEE 802.16 WiMAX Network

研 究 生：施振華

指導教授：陳耀宗 教授

中華民國 一百零一年六月

IEEE802.16 WiMAX 網路下無接縫移動機制之研究與設計

Study and Design of Seamless Mobility Scheme for IEEE 802.16 WiMAX Network

研究生：施振華　　Student：Chen-Hua Shih

指導教授：陳耀宗　　Advisor：Yaw-Chung Chen

國立交通大學
資訊科學與工程研究所
博士論文

A Dissertation
Submitted to Institute of Computer Science and Engineering
College of Computer Science
National Chiao Tung University
in partial Fulfillment of the Requirements
for the Degree of
Doctor of Philosophy
in
Computer Science

June 2012

Hsinchu, Taiwan, Republic of China

中華民國一百零一年六月

Study and Design of Seamless Mobility Scheme for IEEE 802.16 WiMAX Network

Student：Chen-Hua Shih

Advisor：Yaw-Chung Chen

A Dissertation Submitted to
Institute of Computer Science and Engineering
College of Computer Science
National Chiao Tung University
In partial Fulfillment of the Requirements
for the Degree of
Doctor of Philosophy
in
Computer Science

Hsinchu, Taiwan, Republic of China

June 2012

IEEE802.16 WiMAX 網路下無接縫移動機制之研究與設計

學生；施振華　　　　　　　　　　指導教授：陳耀宗 博士

國立交通大學資訊科學與工程研究所

摘要

隨著高品質多媒體應用與 4G WiMAX 網路技術的盛行，使用者能隨時隨地的透過 WiMAX 無線網路存取多媒體服務。然而，對於那些在 WiMAX 無線網路移動的使用者而言，換手程序導致的服務中斷時間與封包掉落造成令人無法接受的服務品質。尤其在 IEEE 802.16j 行動中繼站模式下，此情況更為嚴重。因此，在 WiMAX 網路中，減少服務中斷時間與封包掉落對於提供無接縫的移動與令人滿意之服務品質是非常重要的議題。

為了提供無接縫的移動，數個著名的移動機制被提出來。Mobile IPv6 (MIPv6)對於 IP 層的行動性提出一個基本的換手機制；Fast MIPv6 (FMIPv6)則在 link 層與 IP 層之間提供了一套平行的換手機制以減少服務中斷時間；Hierarchical MIP (HMIP)利用階層式的方式來執行區域性的行動管理；Proxy MIPv6 (PMIPv6)則提供一套網路為基礎的移動機制。在此機制下，行動節點的 IP 層換手程序行動節點改交由網路端的路由器代為執行，行動節點本身不需要參與 IP 層換手程序。這些方法各自提出有效減少服務中斷時間與封包掉落的方法。然而，這些方法並沒有針對 WiMAX 網路做最佳化之處理，且上述之移動機制在 IEEE 802.16j 行動中繼站模式下，仍然有高服務中斷時間與封包掉落的缺點，這些問題或問題的起因包含了循序的換手、耗時的重覆位址偵測程序、第二層網路重新進入的延遲時間、以及 link 層的換手是由行動中繼站執行而不是行動節點執行等。在此論文中，我們對於 WiMAX 網路中包含的 IEEE802.16e 模式與 IEEE802.16j 行動中繼站模式各自提出改進服務中斷時間與封包掉落的機制以達到無接縫的移動。

第一個提出的方案主要是針對 IEEE802.16e 網路。此行動機制整合了第二與第三層的控制訊息，並且提出一個快速第二層網路重新進入機制以減少換手所需的控制訊息與

服務中斷時間。在此機制下，行動節點將與基地台溝通協調以預先的完成某些第二層網路重新進入程序。我們所提出的預先第二層網路重新進入程序包含了專屬測距時槽的取得、暫時認證機制、以及預先服務流的配置。因此，在行動節點完成測距程序之後，即可恢復收送封包，有效的減少了服務中斷時間。

第二個提出的方案則針對 IEEE802.16j 行動中繼站模式。此方案為一個主機為基礎的行動機制。此行動機制利用行動中繼站 link 層與行動節點 IP 層的相互合作以達成平行的換手程序。當行動中繼站在執行 link 層換手程序時，它會通知行動節點的 IP 層開始執行 IP 層的換手。透過提出的平行換手程序，服務中斷時間可以顯著的減少。此外為了減少換手期間的封包掉落，我們也提出一套封包暫存的機制。最後我們將第一個方案提出的方法整合套用至第二個方案，以進一步的減少服務中斷時間。

第三個方案同樣針對 IEEE802.16j 行動中繼站模式，我們提出一個網路為基礎的行動機制。透過行動中繼站的 link 層與路由器的 IP 層合作，同樣可達到平行的換手機制，且行動節點無需參與 IP 層的換手程序。這個網路為基礎的行動機制減少了主機為基礎的行動機制中耗時的重複位址偵測時間。為了進一步的減少服務中斷時間，我們同樣將第一個所提出的方法中之快速第二層網路重新進入機制導入此方法內。

根據分析與模擬顯示我們提出的機制有效地減少服務中斷時間與封包掉落。因此，對於在 WiMAX 網路下之移動使用者而言，其能獲得無接縫的換手與令人滿意的服務品質。

Study and Design of Seamless Mobility Scheme for IEEE 802.16 WiMAX Network

Student: Chen-Hua Shih Advisor: Dr. Yaw-Chung Chen

Institute of Computer Science and Engineering
National Chiao Tung University

Abstract

As technologies for the high quality multimedia application and 4G WiMAX network prevail, one can easily be under services everywhere through WiMAX wireless network. However, the service disruption time (SDT) and packet loss caused by handover procedure leads to an unacceptable quality of Service (QoS) for mobile users in WiMAX wireless network, especially in IEEE 802.16j mobile relay station (MRS) mode. Therefore, minimizing SDT and packet loss are necessary in supporting seamless mobility and satisfactory QoS for mobile users in WiMAX network.

For supporting seamless mobility, several notable mobility schemes were proposed. Mobile IPv6 (MIPv6) provides the fundamental handover methods for mobility management at IP layer. Fast MIPv6 (FMIPv6) provides a parallel handover mechanism between link-layer and IP layer to reduce the SDT. Hierarchical MIP (HMIP) employs hierarchical architecture to perform local mobility management. Proxy MIPv6 (PMIPv6) provides a network-based mobility scheme in which mobile station (MS) needs not participate in the IP layer handover procedure. However, the above schemes are general solutions and do not aim at WiMAX network. They still suffer high SDT and packet loss problem in IEEE 802.16j MRS mode in which the link-layer handover is performed by the MRS instead of MS. In this dissertation, for supporting seamless mobility, we proposed three enhanced mechanisms to reduce the SDT and packet loss in the IEEE 802.16e and IEEE 802.16j MRS mode.

The first proposed scheme aims at IEEE 802.16e. The proposed cross-layer IPv6 fast handover scheme which features integrated layer 2/layer 3 messages and pre-layer 2 network re-entry procedure (Pre-L2NR). It can reduce the SDT and the numbers of control messages during handover. In the proposed scheme, the MS will negotiate with the base station (BS) to perform the layer 2 network re-entry procedure in advance. The Pre-L2NR includes acquirement of dedicated ranging time slot, temporary authentication mechanism, and pre-service flow construction. Therefore, the MS can resume receiving/sending packets after it completes the ranging procedure, leading to the reduced SDT.

The second proposed scheme is for IEEE 802.16j MRS mode. It is a host-based mobility approach. It utilizes the cooperation between the MRS's link-layer and MS's IP layer to achieve the parallel handover. The MRS's link-layer will notify the MS's IP layer to perform IP layer handover procedure when the MRS performs link-layer handover. The parallel handover reduces the SDT efficiently. On the other hand, the proposed buffering mechanism can avoid packet loss during handover. We also integrated the first mechanism into the second mechanism to further reduce the SDT.

The third proposed scheme also aims at IEEE 802.16j MRS mode. A network-based mobility approach is presented to improve the SDT and packet loss in the MRS mode. Through the cooperation between the MRS's link-layer and access router's (AR's) IP layer, the parallel handover can be achieved, and the MS needs not participate in the IP layer handover procedure. The proposed network-based mobility approach can reduce the time for considerably longer duplicate address detection (DAD) process in the host-based mobility approach. The third proposed scheme further reduces SDT by Pre-L2NR.

According to the results of analyses and simulations, the proposed schemes can reduce the SDT and packet loss efficient. As a result, the seamless mobility and satisfactory QoS can be achieved for mobile users in WiMAX network.

Keywords: QoS, mobility, Mobile IP, Proxy Mobile IP, relay station, WiMAX

Acknowledgement

First of all, I would like to express my sincere thanks to my advisor, Prof. Yaw-Chung Chen, for his guidance throughout the years. He has given me valuable advice on both the research and life, and encouraged me when I encountered great difficulties in doing research. I also deeply appreciate all the committee members, Prof. Shie-Yuan Wang, Prof. Tsern-Huei Lee, Prof. Yao-Nan Lien, Prof. Chung-Shyan Liu, Prof. Chun-Liang Lee, and Prof. Pi-Chung Wang, for their insightful comments and effort in reviewing the dissertation.

In addition, I thank the Jun-Li Kuo and Cheng-Yuan Ho for their helpful suggestions in my research, and all the members in Multimedia Communications Laboratory for their cheers and encouragement when I discourage. My best friend, Ying-Chieh Yen, always help me when I need.

Finally, I would most like to thank my family members, my parents and brothers, for their continual encouragement and support. Also, I would like to express my thanks to my girl friend, Jr-Wei Lin and her family. She always stands by my side to bring me happiness. Without their love, I cannot finish my Ph.D degree.

Table of Contents

List of Figures

List of Tables

Chapter 1

Introduction

Recent advances in wireless technologies (e.g., WiMAX wireless network) enable users to be under variety of services with any device, anytime, and anywhere. Therefore, providing a satisfactory quality of Service (QoS) for mobile users is a critical issue. In the WiMAX network, the mobile users can move freely; however, the handover[1] procedure causes a long service disruption time (SDT) and packet loss, leading to service termination and an unacceptable QoS. Therefore, minimizing SDT is necessary in supporting seamless mobility and satisfactory QoS for mobile users, and it can be achieved by an efficient mobility management technology. The main purpose of mobility management is to provide continuous service to a mobile station (MS) without breaking the connection when an MS changes its point of attachment (PoA) [1].

Mobile IPv4 (MIPv4) [2] and mobile IPv6 (MIPv6) [3] are defined by the IETF as the mobility management protocol in IPv4 and IPv6 networks, respectively. They provide the fundamental handover methods for mobility management at IP layer (i.e., layer 3, L3). Fast MIPv6 (FMIPv6) [4, 5] provides a parallel handover mechanism between link-layer and IP layer to reduce the SDT. MIPv4, MIPv6, and FMIPv6 belong to the host-based mobility approaches that require modification to the protocol stack of the MS to support IP mobility. In contrast, Proxy MIPv6 (PMIPv6) [6] provides a network-based mobility scheme in which MS

---

[1] Handover is the process of maintaining the active sessions of a mobile station (MS) as it migrates from the network served by one base station (BS) to the network served by another BS. There are two categories of handover: the link layer handover and the IP layer handover, also known as layer 2 and layer 3 handover, respectively.

needs not participate in the IP layer handover procedure and the serving network manages IP mobility on behalf of the MS. For the latest few years, several fast handover mechanisms [7, 8, 9] based on PMIPv6 were proposed to reduce the SDT and packet loss with PMIPv6. Unlike above mobility schemes that deal with the mobility in IP layer, Session Initiation Protocol (SIP) [10, 11] is adopted for application layer mobility. It utilizes an SIP Redirect Server to keep tracking the MS's location. On the other hand, Host Identity Protocol (HIP) [12, 13] is a new protocol layer between network and transport layer to support secure mobility management in IP networks. The roles of locator and identifier of an IP address are decoupled in HIP, and therefore, IP address is only used for packet forwarding and host identifier (HI) is a public key used to represent the host identity. Cellular IP [14] provides the mobility management of cellular systems into an IP paradigm.

Hierarchical MIP (HMIP) [15] employs hierarchical architecture to perform local IP mobility management. It is a tunnel-based protocol that employs hierarchical mobility architecture or requires a mobility gateway to tunnel packets to and from MSs. On the other hand, the host-specific-routing based protocols, such as Handoff-Aware Wireless Access Internet Infrastructure (HAWAII) [16] and fast intra-network and cross-layer handover (FINCH) [17], adopt new routing schemes to support intra-domain mobility. That is, standard IP routing is not used for intra-domain mobility management.

In HAWAII protocol, the inter-domain mobility management still uses the MIP, and it deals with the intra-domain mobility management. HAWAII divides a network into several small domains, and network nodes in HAWAII maintain mobile-specific routing entries on the legacy routing tables. In addition, the authors in [17] proposed an FINCH for the mobile WiMAX and other IEEE 802-series standards, it also uses the MIP to handle the inter-domain mobility management.

1.1 Motivation

The above IP layer mobility schemes are general solutions and do not aim at WiMAX network. They still suffer high SDT and packet loss problem, especially in IEEE 802.16j MRS mode in which the link-layer handover is performed by the MRS instead of MS.

In this dissertation, for supporting seamless mobility, we proposed three enhanced mechanisms to reduce the SDT and packet loss in the IEEE 802.16e and IEEE 802.16j MRS mode.

1.2 Contributions

In this dissertation, we proposed three enhanced mechanisms to reduce the SDT and packet loss in the IEEE 802.16e and the IEEE 802.16j (Mobile Relay Station) MRS mode.

The first proposed scheme aims at IEEE 802.16e. The proposed cross-layer IPv6 fast handover scheme which features integrated layer 2/layer 3 messages and pre-layer 2 network re-entry procedure (Pre-L2NR). It can reduce the SDT and the numbers of control messages during handover. In the proposed scheme, the MS will negotiate with the base station (BS) to perform the layer 2 network re-entry procedure in advance. The Pre-L2NR includes acquirement of dedicated ranging time slot, temporary authentication mechanism, and pre-service flow construction. Therefore, the MS can resume receiving/sending packets after it completes the ranging procedure, leading to the reduced SDT.

The second proposed scheme is for IEEE 802.16j MRS mode. It is a host-based mobility approach called host-based fast mobility scheme (HFMS). It utilizes the cooperation between the MRS's link-layer and MS's IP layer to achieve the parallel handover. The MRS's link-layer will notify the MS's IP layer to perform IP layer handover procedure when the MRS performs link-layer handover. The parallel handover reduces the SDT efficiently. On the other hand, the proposed buffering mechanism can avoid packet loss during handover. We also integrated the first mechanism into the HFMS to further reduce the SDT.

The third proposed scheme also aims at IEEE 802.16j MRS mode. A network-based mobility approach called network-based fast mobility scheme (NFMS) is presented to improve the SDT and packet loss in the MRS mode. Through the cooperation between the MRS's link-layer and access router's (AR's) IP layer, the parallel handover can be achieved, and the MS needs not participate in the IP layer handover procedure. The proposed network-based mobility approach can reduce the time for considerably longer duplicate address detection (DAD) process in the host-based mobility approach. The NFMS further reduces SDT by Pre-L2NR.

1.3 Dissertation Outline

The rest of this dissertation is organized as follows. In Chapter 2, We review the background about IEEE 802.16e and IEEE 802.16j MRS mode. Some mobility schemes are also discussed in this Chapter. The proposed schemes for IEEE 802.16e and IEEE 802.16j MRS mode are described and evaluated in Chapters 3, 4, and 5, respectively. Finally, We conclude the main work of this dissertation and point out some future work in Chapter 6.

Chapter 2

Background

In this chapter, we briefly introduce the IEEE 802.16e and IEEE 802.16j standards in the first two sections. The notable solutions for seamless mobility including MIPv6, FMIPv6, HMIPv6, and PMIPv6 are presented in the third section. In the last section, the main characteristics of notable mobility schemes are summarize.

2.1 Overview of IEEE 802.16e

The IEEE 802.16-2004 standard [18] defines the air interface specification for wireless metropolitan area network (WMAN) to support high speed data transmission. As the enhancement to the IEEE 802.16-2004, the IEEE 802.16e [19] provides a series of handover procedures to support mobility service in the worldwide interoperability for microwave access (WiMAX).

The link layer handover, also known as layer 2 handover, defined in IEEE 802.16e includes three modes, a mandatory hard handover, also known as break-before-make; a macro diversity handover (MDHO) and a fast BS switching (FBSS). The last two are optional make-before-break soft handovers, in which an mobile station (MS) may register with several base stations (BSs) simultaneously so it can achieve less handover latency. However, there are quite a bit of restrictions on the BS under these two modes, such as synchronization in a common timing source, same carrier frequency, and sharing of all information. Hence, the IEEE 802.16e uses the hard handover basically. The IEEE 802.16e link layer handover process consists of cell reselection, handover decision and initiation, synchronization to the target BS, ranging and network re-entry, and termination of context with previous BS.

2.2 Overview of IEEE 802.16j

IEEE 802.16j multi-hop relay standard [20] aims at gaining coverage extension and throughput enhancement to WiMAX networks by introducing relay station (RS) to relay the data and management information between MS and BS. Table 2.1 shows the main differences between the IEEE802.16e and IEEE 802.16j [21].

Figure 2.1 shows the examples of the most important usage scenarios for RSs [22]. Fixed RSs (FRS) can be deployed for providing coverage extension at cell edge, providing coverage for indoor users, providing coverage for users in coverage holes that in shadow or valleys between buildings, or providing access for clusters of users outside the coverage area of the BS, in the fixed infrastructure usage model.

Table 2.1: Comparison for IEEE 802.16e and IEEE 802.16j.

	IEEE 802.16e	**IEEE802.16j**
Topology	PMP only	Tree structure
Hops	Single hop	Multi-hop
Traffic aggregation	No	Yes over multi-hop path
Coverage	Lower	Higher
Cost	Higher	Lower
System	Lower	Higher within BS coverage area
Legacy 802.16e stations	—	Backward compatible
Mobility support	Yes	Yes
PHY support	OFDMA	OFDMA extension

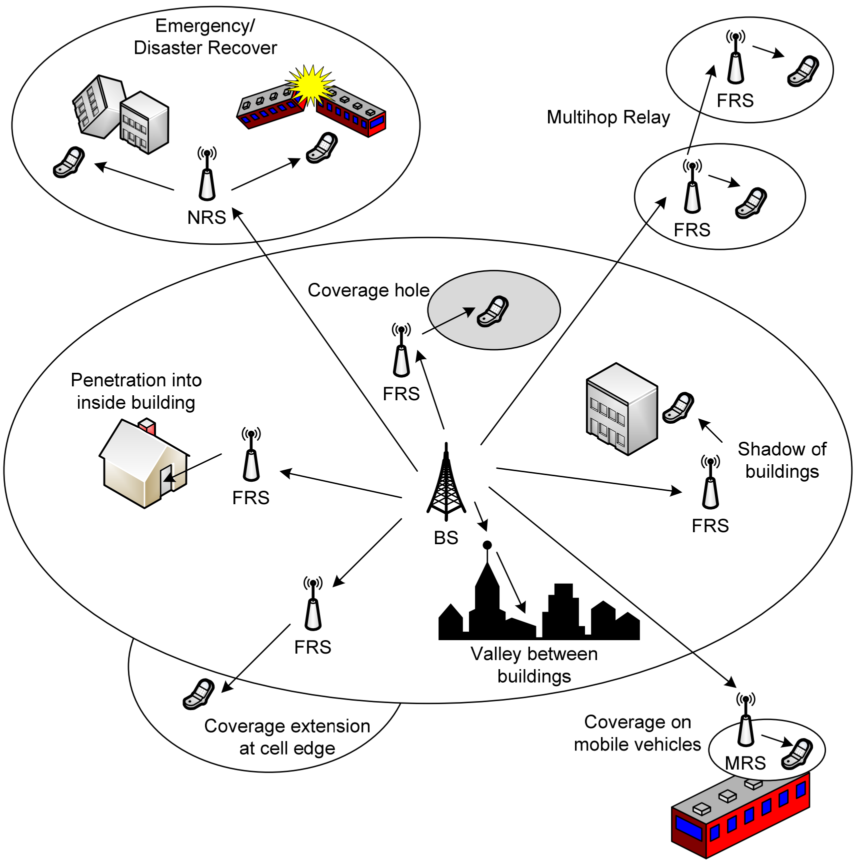

Figure 2.1: Examples of usage scenarios for relay stations.

On the other hand, nomadic RSs (NRS) are deployed temporarily to provide additional coverage or capacity in some areas where BSs and/or FRSs do not provide sufficient coverage or capacity. Examples of temporary coverage are for emergency, disaster recovery situations, or sporting event. An Mobile RS (MRS) can be mounted on a vehicle, such as a bus or train, connected to a BS via a wireless link. In this case, the MRS provides a fixed access link to end terminals (i.e., MSs) on the vehicle.

2.3 Mobile IP

The Mobile IP protocols (i.e., mobile IPv4 (MIPv4) [2] and mobile IPv6 (MIPv6) [3] are defined by the IETF as the mobility management protocol in IPv4/IPv6 networks. They provide the fundamental handover methods for mobility management at IP layer. MIPv4 and

MIPv6 allow mobile devices (i.e., MS) to maintain a fixed IP address when they roam between different network domains. The components in MIPv6 include home agent (HA), access router (AR), correspondent node (CN), and mobile station (MS). The HA serves the MS when the MS is within home network. The AR will advertise the network information and serve the MS when the MS moves into visited or foreign network. The CN is the node that communicates with the MS.

In MIPv6, when the MS roams to a foreign network, subsequent to a link-layer handover, the MS will perform the IP layer handover procedure including movement detection, new care of address (CoA) configuration and duplicate address detection (DAD), and binding update (BU). The movement detection relays on the advertisement from the AR, and the MS will configure a new CoA according to the information advertised by the AR. After finishing the DAD procedure, the MS will register its new CoA to the HA by binding update. The HA will intercept those packets coming from the CN and heading for the MS's home address (HoA), encapsulate these packets, and then tunnel them to the MS's registered CoA after address registration. The MS has to report any change in the current CoA by sending a BU to its HA. The overview of MIPv6 are shown in Figure 2.2.

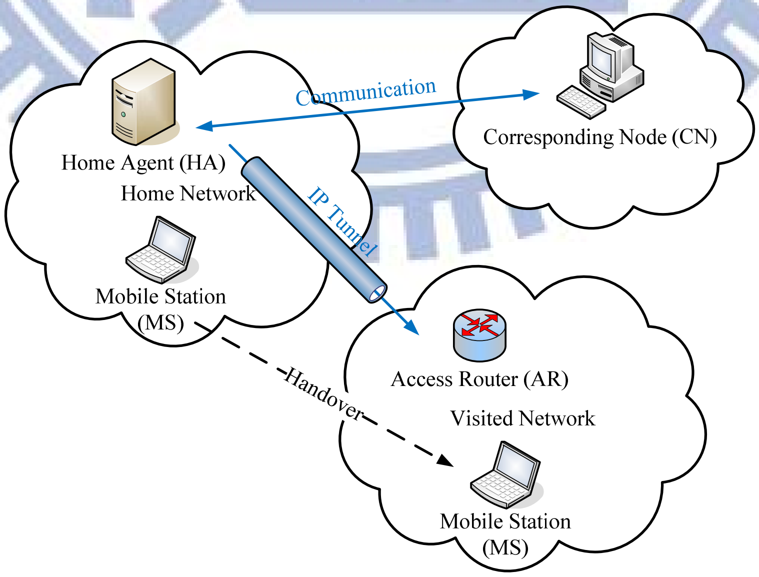

Figure 2.2: The overview of MIPv6.

Although MIPv6 is a mature protocol in mobility management, it still remains some problems, such as long handover latency, SDT, and packet loss. The long SDT is caused by the longer DAD procedure and the sequential handover procedures. Moreover, for real-time application such as VoIP, IPTV, and video conference, handover latency and SDT will directly affect the QoS for these real-time services. For improve the handover latency and SDT in MIPv6, a cross-layer mobility scheme (i.e., FMIPv6) is proposed.

2.4 Fast Mobile IP

FMIPv6 [4] is a cross-layering mechanism in which the link-layer and IP layer handover procedures are performed simultaneously to reduce the SDT. On the other hand, the FMIPv6 allows an MS to obtain the newly associated subnet prefix information when it is still connecting to the current AR. Therefore, the MS can configure the new CoA and perform the DAD procedure before connecting to new AR. The control messages in FMIPv6 include router solicitation for proxy (RtSolPr), proxy router advertisement (PrRtAdv), handover initiation (HI), handover acknowledgement (HAck), fast binding Update (FBU), fast binding acknowledgement (FBAck), and fast neighbor advertisement (FNA).

The FMIPv6 handover procedures are as follow. The previous AR (PAR) is the router to which the MS is currently attached and the new AR (NAR) is the router to which the MS is about to move. An MS may discover available access points using link-layer specific mechanisms (e.g. scan process in wireless LAN) and then request subnet information corresponding to one or more of those discovered access points by exchanging RrSolPr and PrRtAdv messages with the PAR. After this process, the MS can produce a list of [APID, AR-Info] tuple(s). The AR Information (AR-Info), containing the associated AR's prefix information, IP address, and link layer address, can be used to configure a new CoA.

Subsequently, the MS sends FBU message, including the new CoA configured by MS, to the PAR for performing IP layer handover. Upon receiving an FBU message, the PAR exchanges the HI and HAck messages with the NAR to confirm the new CoA through DAD procedure and set up a tunnel between the previous CoA and new CoA. Next, the PAR will forward the packets destined to the previous CoA to the new one as well as send back an FBAck message to the MS. The NAR will buffer these packets until receiving an FNA message from the MS. When the MS moves into the NAR's domain, it sends the FNA message to initiate the flow of packets at the NAR. When the NAR receives an FNA message, it will deliver the buffered packets to the MS.

In case the MS receives an FBAck message before starting the link layer handover, the MS will operate in the predictive mode, which enables the MS to quickly receive packets from the NAR after it has moved to the NAR. On the contrary, if the MS finished the link layer handover before it acquires an FBAck message on the current link, it should operate in the reactive mode. In this situation, the MS must issue an FNA message that encapsulates the FBU message to the NAR, which will then verify the availability of the new CoA and forward the inner FBU message to the PAR to establish a tunnel. Figure 2.3 and Figure 2.4 show the basic operations of the predictive mode and reactive mode in FMIPv6, respectively. In reactive mode, the MS must wait for packet rerouting to be executed, and then it can receive packets from the NAR. The detailed explanations are described in [4].

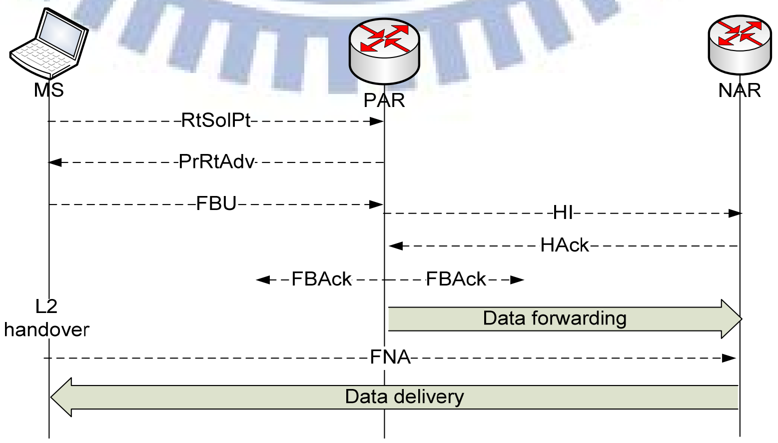

Figure 2.3: Predictive mode in FMIPv6.

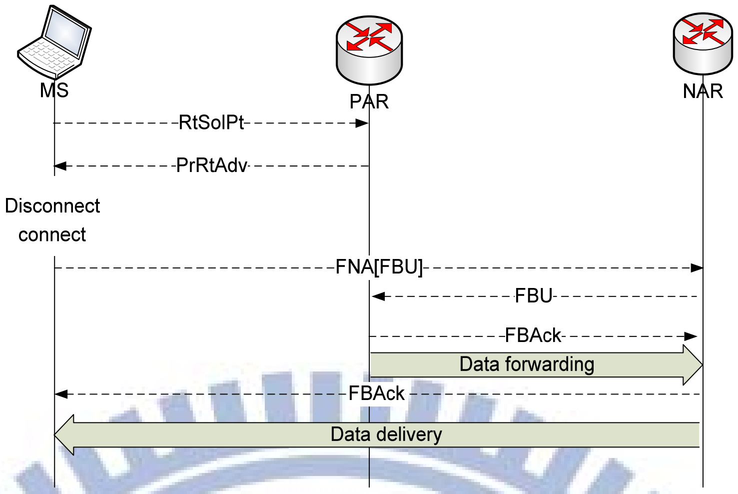

Figure 2.4: Reactive mode in FMIPv6.

2.5 Hierarchical Mobile IP

HMIPv6 [15] separates mobility management into two parts. The first one is micro mobility or intra-domain mobility and the second one is macro mobility or inter-domain mobility. The central entity of HMIPv6 is the inclusion of a special conceptual element called mobile anchor point (MAP). In HMIPv6, the MAP acts as a router or a set of routers that maintains a binding cache mapping between itself and the visiting MSs in the local domain currently. It is usually placed into the edges of a network, above the access routers, receives packets on behalf of the MSs attached to that network. Whenever an MS attaches itself to a new network, it registers with the MAP serving that network domain (MAP domain).

The characteristic of MAP acts as the local home agent for the MS. It intercepts all the packets addressed to the MS and forwards them to the corresponding on link CoA of the MS. When the MS changes its current point of attachment within the same MAP domain, it only needs to register a new on-link care of address (LCoA) from the foreign agent serving it, and the MS just needs to register the LCoA to the MAP. Therefore it does not need to change the global CoA or regional care-of address (RCoA), all packets heading for MS are intercepted by

MAP, which encapsulate the packet and send it to MS's current LCoA. By using this approach, the signaling cost is limited within a smaller area between MAP and AR. The handover signaling without requiring propagation through the whole network and location update time is reduced.

However, if an MS moved into a new MAP domain, the MS needs not only to get a RCoA but also to acquire an LCoA, as its current location. Then, the MS uses the new MAP's address as the RCoA, while the LCoA address can be formed as stated in [23]. The procedure is as follows: After these addresses are formed, the MS sends a regular MIPv6 BU message to the MAP, which will create a binding cache mapping and bind the MS's RCoA to its LCoA. After creating BCE successfully, the MAP will return a binding acknowledgement (BAck) message to the MS indicating a successful registration. After registering with the MAP, the MS also needs register its new RCoA with its HA by sending another BU message that specifies the binding (RCoA and MS's home address), as in MIPv6. Finally, it may send similar BU to its current communicating CN, specifying the binding between its home address and the RCoA.

2.6 Proxy Mobile IP

PMIPv6 [6] is a network-based IP mobility management to support an MS in a topologically localized domain. In a network-based approach, the serving network controls mobility management on behalf of MS. It does not require the participation of MS in any mobility-related signaling. The primary features of PMIPv6's goal are serving for unmodified MSs, supporting the IPv4 and IPv6, efficient use of wireless resources, and handover performance improvement.

Figure 2.5 illustrates an overview of how PMIPv6 works within a localized domain. The brief descriptions of the basic terminology are also shown in this figure. As shown in Figure

2.5, the new major functional entities of PMIPv6 are the mobile access gateway (MAG) and local mobility anchor (LMA). The main function of the MAG is to detect the MS's movements and initiate mobility-related signaling with the MS's LMA on behalf of the MS. In addition, the MAG establishes a tunnel with the LMA for allowing the MS to use an address (e.g. HoA) from its home network prefix (HNP) and imitates the MS's home network on the access network for each MS.

On the other hand, the LMA acts as MS's HA in PMIPv6. However, it has additional capabilities required to support PMIPv6. The main role of the LMA is to maintain reachability to the MS's address when it moves around within a PMIPv6 domain. The LMA maintains a binding cache entry (BCE) for each currently registered MS. The BCE maintained at the LMA is more extended than that of the HA in MIPv6 with some additional fields. These additional fields include the MS-Identifier, the MS's home network prefix, a flag indicating a proxy registration, and the interface identifier of the bidirectional tunnel between the LMA and MAG. This information associates the MS with its serving MAG, and enables the relationship between the MAG and LMA to be maintained.

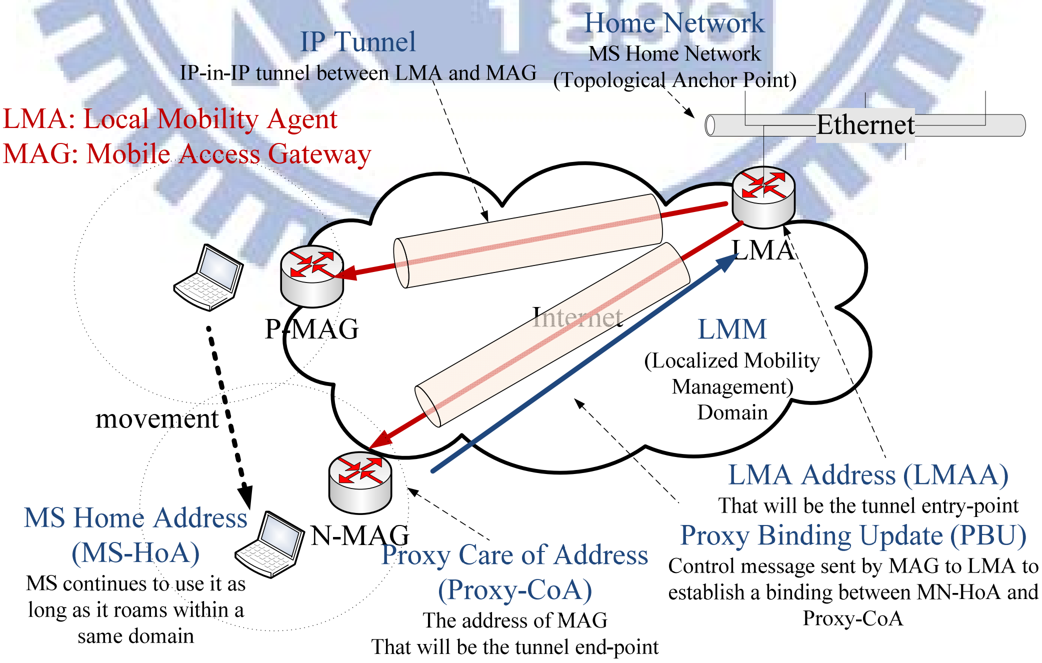

Figure 2.5: Overview of PMIPv6.

2.7 Chapter Summary

In this Chapter, we briefly introduce the IEEE 802.16e and IEEE 802.16j standards, and then describe the notable solutions for seamless mobility including MIPv6, FMIPv6, HMIPv6, and PMIPv6. Table 2.2 shows a summary of the main characteristics of host-based mobility protocol compared with network-based mobility protocol.

Table 2.2: Comparison of Mobility Schemes.

Protocol Characterize	**MIPv6**	**FMIPv6**	**HMIPv6**	**PMIPv6**
Required infrastructure	HA	HA, AR	HA, MAP	LMA, MAG
MS's address	HoA or CoA	CoA	LCoA	HoA(always)
Handover latency	Bad	Good	Moderate	Good
Cross-layer	No	Yes	No	No
Modification for MS	Required			Not Required
Mobility Management	Host-based			Network-based
DAD	Performed at every subnet movement			Performed only one time

Chapter 3

A FMIPv6 Based Handover Scheme for Real-Time Applications in Mobile WiMAX

The IEEE 802.16-2004 standard [18] defines the air interface specification for wireless metropolitan area network (WMAN) to support high speed data transmission. As the enhancement to the IEEE 802.16-2004, the IEEE 802.16e [19] provides a series of handover procedures to support mobility service in the worldwide interoperability for microwave access (WiMAX). Handover is the process of maintaining the active sessions of a mobile station (MS) as it migrates from the network served by one base station (BS) to the network served by another BS.

There are two categories of handover: the link layer handover and the IP layer handover, also known as layer 2 and layer 3 handover, respectively. The former is defined in IEEE 802.16e that includes three modes, a mandatory hard handover, also known as break-before-make; a macro diversity handover (MDHO) and a fast BS switching (FBSS). The last two are optional make-before-break soft handovers, in which an MS may register with several BSs simultaneously so it can achieve less handover latency. However, there are quite a bit of restrictions on the BS under these two modes, such as synchronization in a common timing source, same carrier frequency, and sharing of all information. Hence, the IEEE 802.16e uses the hard handover basically. The IP layer handover procedures comprising movement detection, new care of address (CoA) configuration, and binding update are handled by the Mobile IPv6 (MIPv6) [3].

If the serving BS and target BS involved in the handover locate in the same subnet, the MS only needs to perform link layer handover, which is regarded as an intra-domain handover. Otherwise, it is called an inter-domain handover, and the MS must re-configure a new IP address then execute both the link layer and IP layer handover.

Generally, in a handover procedure there are two types of time interval, the total handover delay and service disruption time (SDT). The former represents the time spent in both link layer and IP layer handover procedures. While the latter is the time interval during which the MS is unable to receive/send packets. SDT is caused by the hard handover and IP layer handover, and minimizing the SDT is a key issue in supporting seamless handover for real-time applications.

3.1 Problem Statements

Several handover schemes have been proposed to improve the handover latency in the IEEE 802.16e network. In [24], new schemes including target BS selection, fast synchronization and association, and optimized handover initiation timing were presented to reduce the layer 2 handover delay. In [25], a network assisted fast handover scheme using the fast association and fast network re-entry methods was proposed to improve the layer 2 handover. These two studies focus on reducing the link layer latency. For decreasing both link and IP layer handover delays, several researches use the cross-layer designs [5, 26, 27, 28, 29]. The authors defined several events for supporting the interaction between the IP layer and the link layer handover procedures [5, 26]. The scheme in [27] uses a layer 3 tunnel between the serving BS and the target BS to redirect and relay the link layer messages such as ranging, capability negotiation, and registration during handover. Therefore the direct message transfer between the MS and the neighboring BSs can be minimized. In [28], the integrated design of the layer 2 and layer 3 handovers reduces the overhead of handover procedures. In [29], a fast key exchange and fast authentication procedure based on cross-layering design decreases the authentication time during the network re-entry procedures.

The above studies focus on reducing either the link layer delay or total handover delay without concerning the SDT. For delay sensitive real-time applications, minimizing the SDT will effectively improve their QoS. In this study, we propose a cross-layer IPv6 fast handover scheme based on the integrated layer 2/layer 3 messages and pre-layer 2 network re-entry methods. Through performance analysis, we demonstrate that our proposed scheme features much lower SDT and total handover delay than the fast mobile IPv6 over 802.16e network scheme.

3.2 Related Work

3.2.1 IEEE 802.16e Handover Procedure

The IEEE 802.16e link layer handover process consists of cell reselection, handover decision and initiation, synchronization to the target BS, ranging and network re-entry, and termination of context with previous BS. The detailed procedures are depicted in Fig. 3.1.

To provide the network topology information and facilitate an MS to synchronize itself with the neighboring BSs, the serving BS periodically broadcasts a mobile neighbor advertisement (MOB_NBR-ADV) message containing the channel information about the neighboring BSs. An MS may exchange the mobile scanning request (MOB_SCN-REQ) and mobile scanning response (MOB_SCN-RSP) messages with the serving BS and perform a scanning process to monitor and measure the radio condition of these neighboring BSs.

During the scanning process, the serving BS may buffer the incoming data destined to the MS and transmit them after the scanning. After the scanning process, the MS will select suitable ones from the candidate neighboring BSs for a future handover.

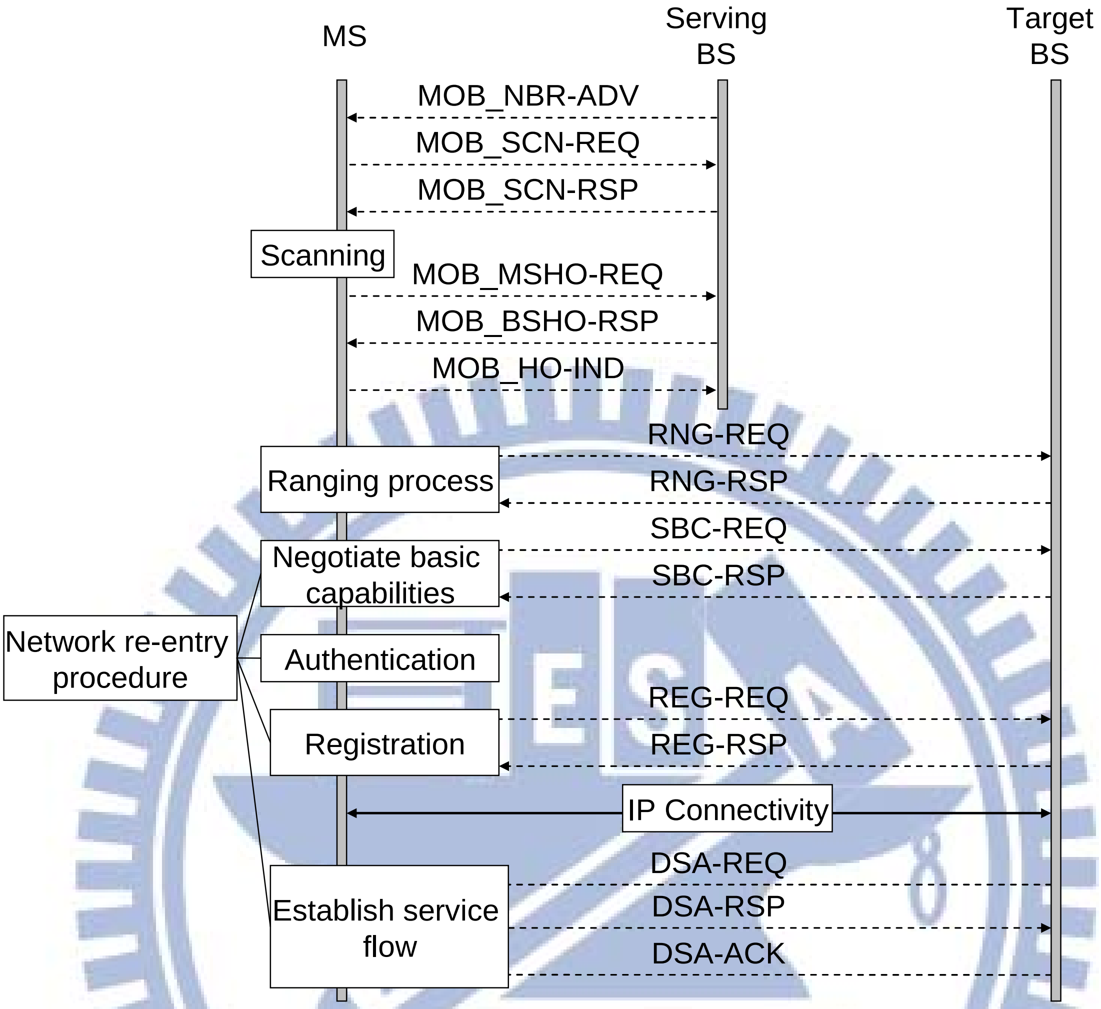

Figure 3.1: The IEEE 802.16e handover procedure.

An MS or serving BS may decide to perform handover based on the signal strength or QoS parameters, and use a handover request message (MOB_MSHO-REQ) or (MOB_BSHO-REQ), respectively to initiate a handover. Upon receiving a MOB_MSHO-REQ message, which contains the candidate neighboring BSs selected by the MS, the serving BS will reply with the MOB_BSHO-RSP message that contains the recommended BSs based on the information in the MOB_MSHO-REQ message. In this study, we assume that the handover procedure is initiated by an MS.

Once switched to the target BS, the MS has to perform the ranging and 802.16e network re-entry processes. There are four steps in the 802.16e network re-entry procedure including negotiation of basic capabilities, authentication, registration, and establishing service flows. Their detailed messages are displayed in Fig. 3.1. In order to accelerate the network re-entry procedure, the target BS may negotiate with the serving BS to obtain the information of the MS over the backbone network after receiving a RNG-REQ message which contains a base station identifier (BSID) of the serving BS. Following the registration of the MS with the target BS, the target BS will become a new serving BS. After the network re-entry process is completed, the connection between the MS and the target BS will be established. Moreover, the MS should obtain some connection identifiers (CIDs) and associated bandwidth allocations for transmission. However, when the MS moves to a different subnet, it should re-configure a new IP address and re-establish an IP connection. Additionally, the MS should perform an IP layer handover to resume the active session of the previous connection. To reduce the time latency of the IP layer handover, the fast mobile IPv6 handover procedure for executing in the MS has been developed.

■ Authentication procedure in IEEE 802.16e layer 2 network re-entry procedure

IEEE 802.16e provides EAP authentication mechanism, EAP-TLS defined in RFC 3748 [30], to create a shared secret (i.e., authentication key, AK) between MS and BS. The authentication process in layer 2 network re-entry procedure includes EAP-TLS authentication, SA-TEK 3way handshake procedure, and key exchange. Therefore, it costs a lot of time in the authentication procedure. After succeeded EAP authentication between MS and authentication, authorization, and accounting (AAA) server, the MS and AAA server will both generate a 512-bit master session key (MSK) by using pseudo random function. Next, the pairwise master key (PMK) and authentication key (AK) are derived by truncating 160 bit of the MSK and by putting PMK into key distribution function, respectively. Then, the MS and BS will both own the AK.

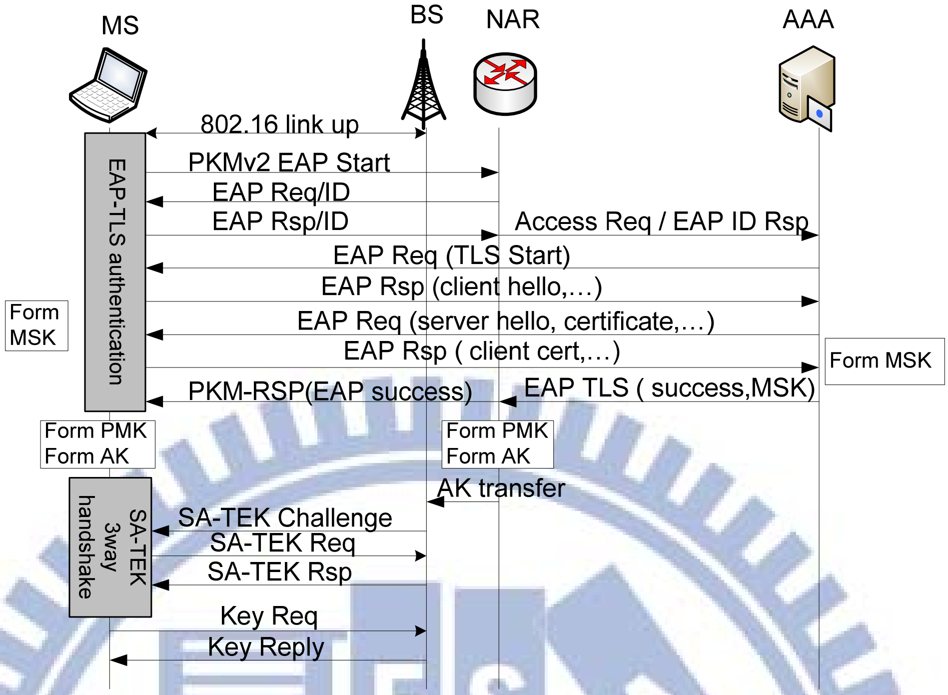

Figure 3.2: The authentication process of the MS.

After confirming the consistency of AK between the BS and MS through SA-TEK 3way handshake procedure, the MS and BS will produce the key encryption key (KEK) and the message authentication keys (HMAC, CMAC). Finally, the traffic encryption key (TEK) which is used to encrypt data will be produced through exchanging Key Req and Key Reply. Figure 3.2 shows the authentication process of MS in layer 2 network re-entry procedure.

3.2.2 Fast Mobile IPv6 Handover Procedure over IEEE 802.16e network

MIPv6 is able to handle the IP handover between subnets and thus provides the session continuity during handover. However, for streaming traffic such as Voice over IP (VoIP), the handover delay resulted from the MIPv6 process which comprises movement detection, new CoA configuration, and binding update is often unacceptable [31]. In order to reduce the handover delay, the fast mobile IPv6 handover protocol (FMIPv6) has been developed. For movement detection, the FMIPv6 enables an MS to quickly detect its entering to a new subnet through providing the new BSID. Regarding new IP address configuration, the FMIPv6 allows an MS to obtain the newly associated subnet prefix information when it is still connecting to the current subnet.

Figure 3.3 illustrates the FMIPv6 handover procedure over IEEE 802.16e network [5]. An MS learns the network topology and obtains the link information through listening to the periodic MOB_NBR-ADV message from its serving BS. Then it may perform the scanning process. Once an MS finds a new BS through the methods described above, a Link_Detected (LD) event will be triggered by the link layer to notify the IP layer to exchange the router solicitation for proxy (RrSolPr) and proxy router advertisement (PrRtAdv) messages with the previous access router (PAR) to obtain the associated access router (AR) information of the new BS and produce a list of [BSID, AR-Info] tuple(s). The AR Information (AR-Info) that contains the associated AR's prefix information, IP address, and link layer address can be used to configure a new CoA.

A Link_Handover_Imminent (LHI) event will be triggered after the MS sends a MOB_MSHO-REQ message to initiate the handover procedure and then receives a MOB_BSHO-RSP message containing the recommended BSs as a response. This event indicates that a link layer handover decision has been made and an impending handover is coming. It also forces the IP layer to send a fast binding update (FBU) message to the PAR. Upon receiving an FBU message, the PAR exchanges the handover initiation (HI) and handover ack (HAck) messages with the target AR to confirm the new CoA (i.e., duplicate address detection (DAD) procedure) and set up a tunnel between the previous CoA and new CoA. Next, the PAR will forward the packets destined to the previous CoA to the new one as well as send back a fast binding acknowledge (FBAck) message to the MS.

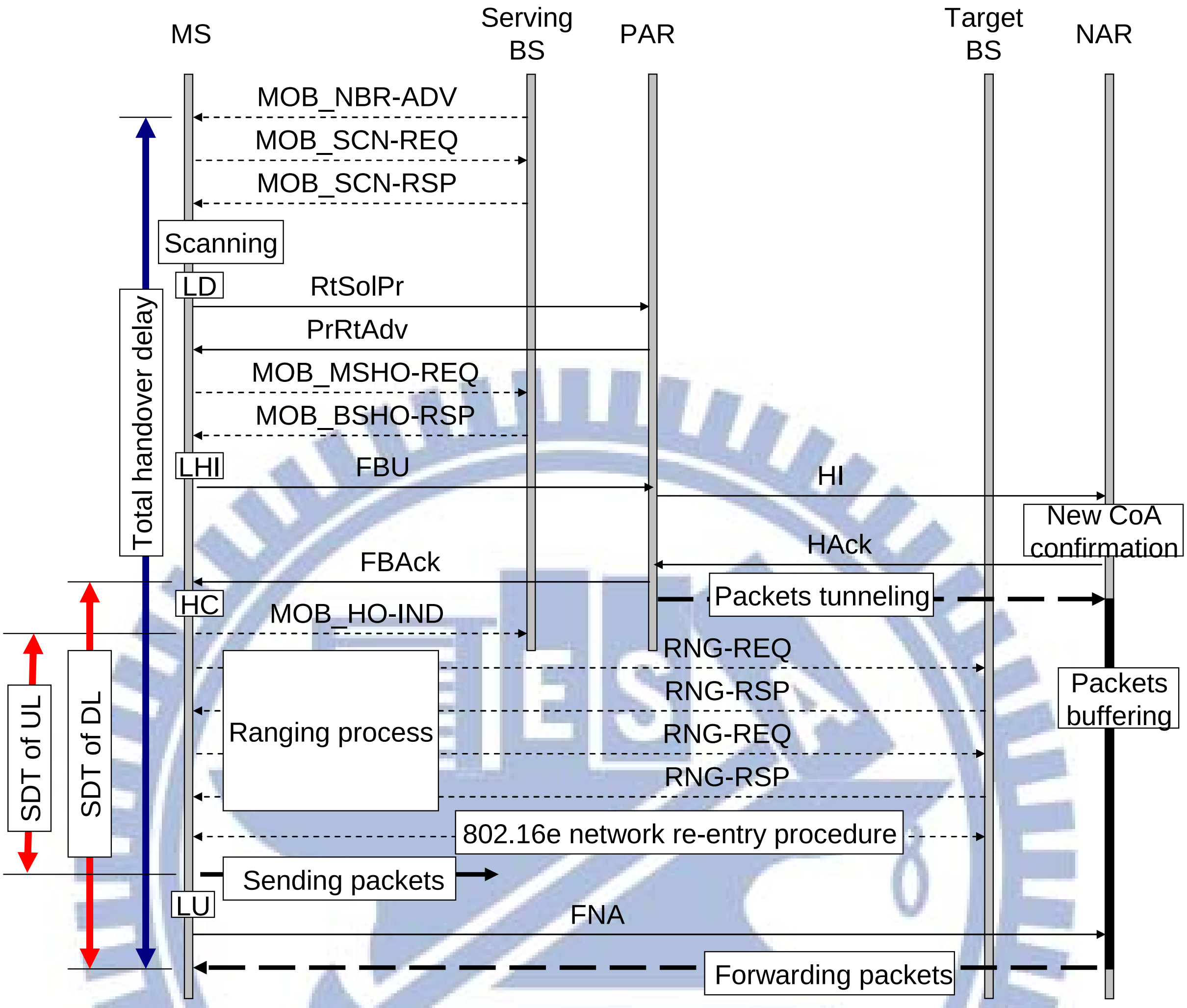

Figure 3.3: FMIPv6 handover procedure over IEEE 802.16e network.

The target AR will buffer these packets until receiving a fast notification (FNA) message from the MS. In order to force the MS to switch from the current BS to the target BS, a Handover_Commit (HC) event triggered by the receipt of the FBAck message will inform the link layer to issue an MOB_HO-IND message. As the MS performs the ranging process and completes the 802.16e network re-entry procedure after switching to the target BS, it will trigger a Link_Up (LU) event indicating that the MS has established the link layer connection with the target BS, the LU will force the IP layer to send an FNA message to the new AR (NAR). When the NAR receives an FNA message, it will deliver the buffered packets to the MS.

In case the MS receives an FBAck message before starting the link layer handover, i.e., receiving an FBAck message before the MS sends an MOB_HO-IND message, the MS will operate in the predictive mode, which enables the MS to quickly receive packets from the NAR after it has moved to the NAR. On the contrary, if the MS finished the link layer handover before it acquires an FBAck message on the current link, it should operate in the reactive mode. In this situation, the MS must issue an FNA message that encapsulates the FBU message to the NAR, which will then verify the availability of the new CoA and forward the inner FBU message to the PAR to establish a tunnel.

3.3 A Cross-Layer IPv6 Fast Handover Scheme for IEEE 802.16e Network

In this work, a cross-layer IPv6 fast handover network architecture for IEEE 802.16e was proposed to reduce the time latency caused by the 802.16e layer 2 and FMIPv6 layer 3 handover procedures. Before the ranging process, the serving BS can be forced to negotiate with the candidate target BSs to acquire new CIDs for the MS. The new serving BS will send the downlink packets after it receives an FNA-RNG-REQ message and finishes the SA-TEK 3-way handshake procedure with MS to confirm the consistency of AK. The uplink packets can be sent by an MS after it finishes the ranging process. Moreover, the redundant messages can be avoided by integrating the link layer and IP layer messages. Thus, the total handover latency and SDT can be reduced.

3.3.1 Integration of Layer 2 and Layer 3 Messages

According to the IEEE 802.16e and FMIPv6 handover processes, an MS must periodically listen to the MOB_NBR-ADV message from its serving BS to obtain the information of the neighboring BSs. Based on either the signal strength or QoS parameters of the neighboring

BSs obtained via scanning process, the MS may select some candidate BSs for potential handover. Next, the MS will request the corresponding ARs' information of the candidate BSs to re-configure new CoAs via exchanging the RtSolPr and PrRtADV messages. By integrating the MOB_NBR-ADV message with the PrRtADV message, the MS can simultaneously obtain the information of the BSs and corresponding ARs. The new integrated message is called *Pr-MOB_NBR-ADV*.

While moving to the target BS, the MS will perform initial ranging process with the target BS to obtain the relative timing and power-level adjustment required for maintaining the uplink connection through sending a RNG-REQ message first. This implies that the MS has moved to a new network, thus, the MS can notify the NAR via the FNA message to forward the buffered packets to it. In our proposed method the target BS will transmit the FNA message to the NAR upon receiving the *FNA-RNG-REQ* message with an encapsulated FNA, instead of sending an FNA message by the MS. By integrating these messages, certain messages become redundant and can be eliminated, thus the total handover latency can be reduced.

3.3.2 Pre-layer 2 Network Re-entry Scheme (Pre-L2NR)

Before an MS resumes receiving/sending packets, it must complete the layer 2 network re-entry procedure. In order to simplify the steps of the 802.16e layer 2 network re-entry procedure, the serving BS may coordinate with the target BS over the backbone [19]. However, the process only can be performed after the MS switches to the target BS. Therefore, the SDT is dramatically long.

The Pre-L2NR includes acquirement of dedicated ranging time slot, temporary authentication mechanism, and pre-service flow construction. As mentioned before, it costs the most time for the authentication procedures in the layer 2 network re-entry procedure. Therefore, in the proposed scheme, the AK, TEK, and KEK using between the serving BS and MS will be reused between the target BS and the MS temporarily after the MS connects to the target BS. However, the MS still needs to perform the full authentication procedure hereafter. As a result, the MS can send/receive data before finishing the full authentication.

Based on the Pre-L2NR scheme proposed here, after the serving BS receives an MOB_MSHO-REQ message which contains the candidate target BSs selected by the MS for future handover, it will issue a HO_notification-REQ message to negotiate with these candidate target BSs regarding the information of the MS. The HO_notification-REQ message contains the parameters of MS's MAC address, serving BSID, the initial ranging process, basic capabilities of MS, temporary authentication, registration, service flow construction, and QoS. The parameters for authentication include the AK, TEK, and KEK using in the current BS.

As a candidate target BS obtains these parameters, both an opportunity for unicast ranging and the new CIDs for traffics will be provided to the MS. Note that the candidate target BS only allocates the bandwidth for ranging process of the MS at the moment, while the bandwidth allocations for actual traffics will not be available until the MS sends an FNA-RNG-REQ message to indicate its arrival. Furthermore, the candidate target BS starts a timer for retaining the resources. The serving BS will get the results from these candidate target BSs through a HO_notification-RSP message. Then, the serving BS forwards the results to the MS through the MOB_BSHO-RSP message.

Upon receiving an MOB_HO-IND message, the serving BS will issue a HO_Decision message to notify these candidate target BSs (except the target BS) the final choice of the MS. The resources retained for the MS will be released upon the expiration of the timer or receipt of a HO_Decision message. For performing the temporary authentication mechanism in the proposed scheme, the target BS will reply an RNG-RSP with an encapsulated SA-TEK Challenge to the MS after it receives the FNA-RNG-REQ message. The SA-TEK Req and SA-TEK Rsp will be encapsulated and exchanged in the next RNG-REQ and RNG-RSP, respectively.

After finishing the SA-TEK 3way handshake, the MS and the target BS not only authenticate each other, but confirm the consistency of AK between them. Therefore, they can use the temporary TEK to encrypt data.

On the other hand, when the target BS receives the FNA-RNG-REQ message, it knows the MS's arrival, and it will sends packets to the MS after finishing the SA-TEK 3way handshake. In contrary, since the SA-TEK 3way handshake will be finished before the ranging process, the MS can send packets after completing the ranging process. Finally, the MS still needs to perform the full authentication procedure. Moreover, the MS can issue the FNA-RNG-REQ message without competition because it owns a dedicated time slot for ranging process. Thus, the SDT for downlink (DL) and uplink (UL) can be minimized.

3.3.3 Procedure of proposed scheme

There are two situations to be considered in the proposed scheme depending on the occasion of receipt of the FBAck message. Figure 3.4 and Figure 3.5 illustrate these two situations respectively and the detailed steps are described below.

- **[Predictive mode]**

1. The serving BS broadcasts a Pr-MOB_NBR-ADV message periodically.
2. The MS obtains the information of neighboring BSs with associated ARs, then it generates a list of [BSID, AR-Info] tuple(s), starts the configuration of CoA, and performs the scanning process to find suitable BSs for handover.
3. To initiate a handover, the MS sends an MOB_MSHO-REQ message which contains a list of the candidate BSs.
4. The serving BS negotiates with these candidate BSs through exchanging the HO_notification-REQ and HO_notification-RSP messages. After this step, these candidate

BSs begin to retain resources for the MS.

5. The serving BS informs the MS the negotiated result via an MOB_BSHO-RSP message.
6. The link layer triggers an LHI event to the IP layer after the MS receives an MOB_BSHO-RSP message.
7. Upon detecting the LHI event, the IP layer will transmit an FBU message to the PAR.
8. As the PAR receives an FBU message from the MS, it will exchange the HI and the HAck messages with the NAR to establish a tunnel and confirm the new CoA. Next, the PAR sends back an FBAck message to the MS. The packets destined to the previous CoA will be forwarded to the new CoA after the tunnel is established.
9. Upon receiving the FBAck message the IP layer will trigger an HC event to the MAC layer.
10. The HC event forces the MAC layer to send an MOB_HO-IND message to the serving BS to disconnect the link. While the serving BS receives this message, it will issue a HO_Decision message to notify these candidate target BSs (except the target BS) to cancel the resources retained for the MS.
11. The MS with a dedicated time slot for ranging process sends an FNA-RNG-REQ message to the target BS to inform its arrival. After receiving this message, the target BS begins to allocate bandwidth for the MS. Next, it sends an FNA message to inform the NAR to deliver buffed packets. The target BS will also reply an RNG-RSP with an encapsulated SA-TEK Challenge to the MS to perform the SA-TEK 3way handshake procedure. The MS can receive packets after completing the SA-TEK 3way handshake procedure.
12. After completing the ranging process for adjusting the UL transmission power, the MS can start sending the packets.
13. The MS perform the full authentication procedure.

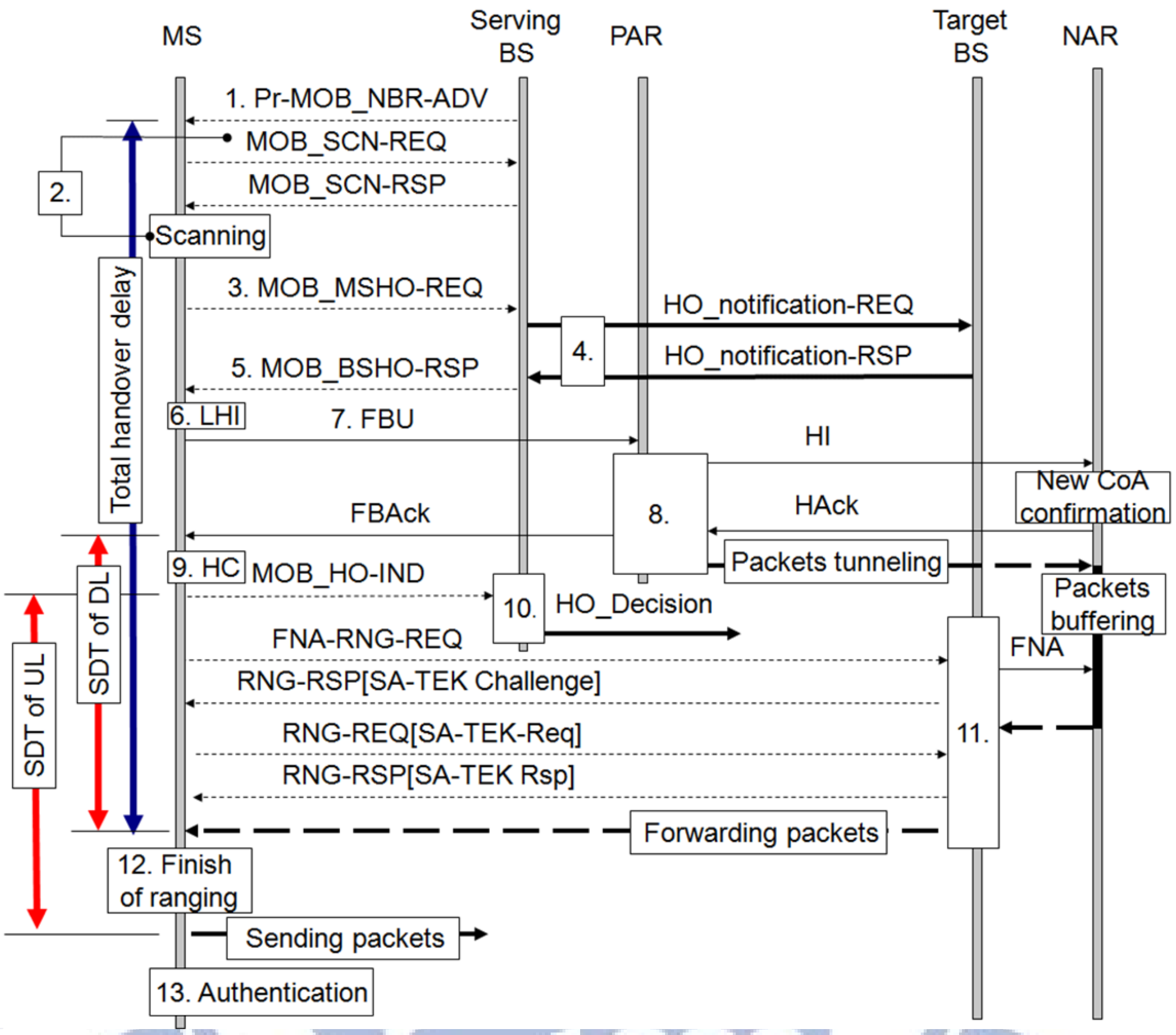

Figure 3.4: The predictive mode with the proposed scheme.

- **[Reactive mode]**

1-7. These are same as the predictive mode described above

8. The MS sends the FBU message to the PAR. However, due to the low signal strength of serving BS, the MS transmits an MOB_HO-IND message to the serving BS before it receives the FBAck message. The serving BS will issue the HO_Decision message to notify these candidate target BSs except the target BS to release the resources retained for the MS as it receives the MOB_HO-IND message.

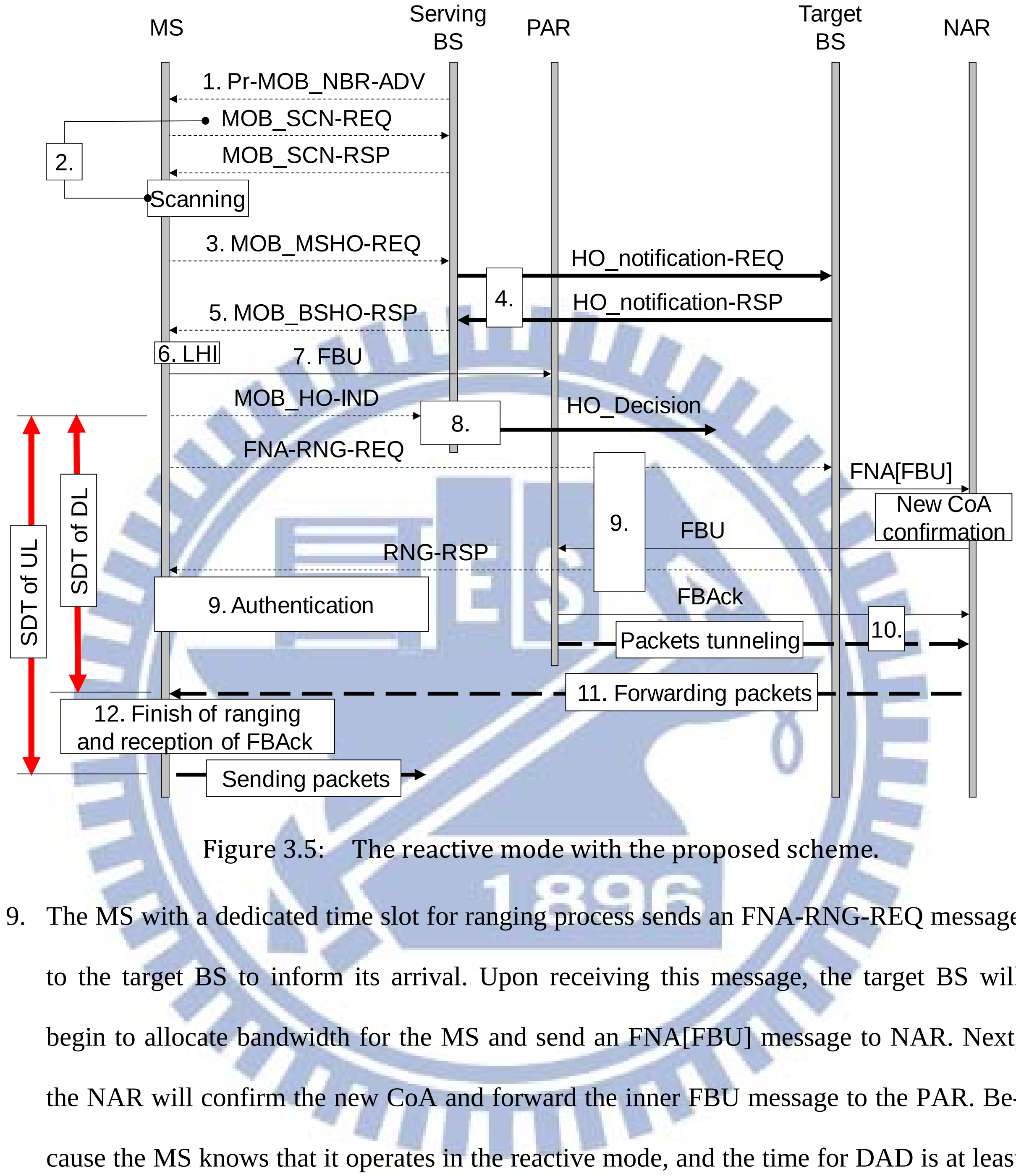

Figure 3.5: The reactive mode with the proposed scheme.

9. The MS with a dedicated time slot for ranging process sends an FNA-RNG-REQ message to the target BS to inform its arrival. Upon receiving this message, the target BS will begin to allocate bandwidth for the MS and send an FNA[FBU] message to NAR. Next, the NAR will confirm the new CoA and forward the inner FBU message to the PAR. Because the MS knows that it operates in the reactive mode, and the time for DAD is at least one second. Therefore, the MS will skip the SA-TEK 3way handshake procedure and perform the full authentication directly.
10. As the PAR receives an FBU message, it will establish a tunnel with the NAR and send back the FBAck message to the MS. After the tunnel is established, the packets destined to the previous CoA will be forwarded to the new CoA.

11. The NAR will deliver these packets to the MS once it receives the tunneled packets from the PAR, and the MS can receive packets thereafter.
12. The MS can send packets after finishing the ranging process and receiving the FBAck message which confirms a successful new CoA.

3.4 Performance Analysis

Before analyzing the delay performance, we define the time intervals during handover procedures. The total handover delay starts with the transmission of an MOB_NBR-ADV message, and ends with the receipt of a packet by the MS in the target BS. The SDT can be viewed from both DL and UL.

The SDT of DL is defined as the elapsed time experienced by an MS from its receiving the last packet through its PAR to its receiving the first packet through the NAR via a tunnel. As the PAR establishes a tunnel with the NAR, the packets destined to previous CoA will be forwarded to the new CoA. Hence, in the predictive mode, the MS can’t receive packets from the PAR after receiving an FBAck message. On the contrary, in the reactive mode, the MS can’t receive packets after sending an MOB_HO_IND message.

The SDT of UL is defined as the elapsed time experienced by an MS from its sending the last packet through its PAR to its sending the first packet through the NAR. In the predictive mode, SDT starts with the transmission of an MOB_HO-IND message, and ends with finishing the ranging process. While in the reactive mode, SDT starts with the transmission of an MOB_HO-IND message, and ends with the finish of ranging process and receipt of an FBAck message via tunnel.

The total handover delay and SDT of DL/UL for the FMIPv6 over 802.16e network mechanism (FM802.16e) and the proposed scheme are shown in Fig. 3.3, 3.4, and 3.5. We define and set the values of parameters based on the literature in [32]. Table 3.1 shows the parameters for the analysis, and the topology considered for performance analysis and simulation is presented in Fig. 3.6.

Table 3.1: Parameters for performance analysis.

Parameter	Description	Values
T_{frame}	Frame duration of IEEE 802.16.	5 ms
T_{cont_resol}	Latency of contention resolution procedure during contention based ranging process.	50 ms
T_{rng}	Latency of ranging process. It usually needs at least six frames.	30 ms
T_{auth}	Latency of full authentication procedure.	175 ms
T_{L2_entry}	Latency of IEEE 802.16 layer 2 network re-entry procedure.	210 ms
T_{hop}	Latency of every routing hop in wired backbone network.	0.5 ms
T_{dad}	Latency of DAD procedure.	1 s
T_{bs_ar}	Transmission delay between BS and AR.	1 ms
N_{par_nar}	Number of hop between PAR and NAR.	2 hops
D_{olap}	Overlap distance between Serving and Target BS.	35 m
v	Velocity of MS.	-

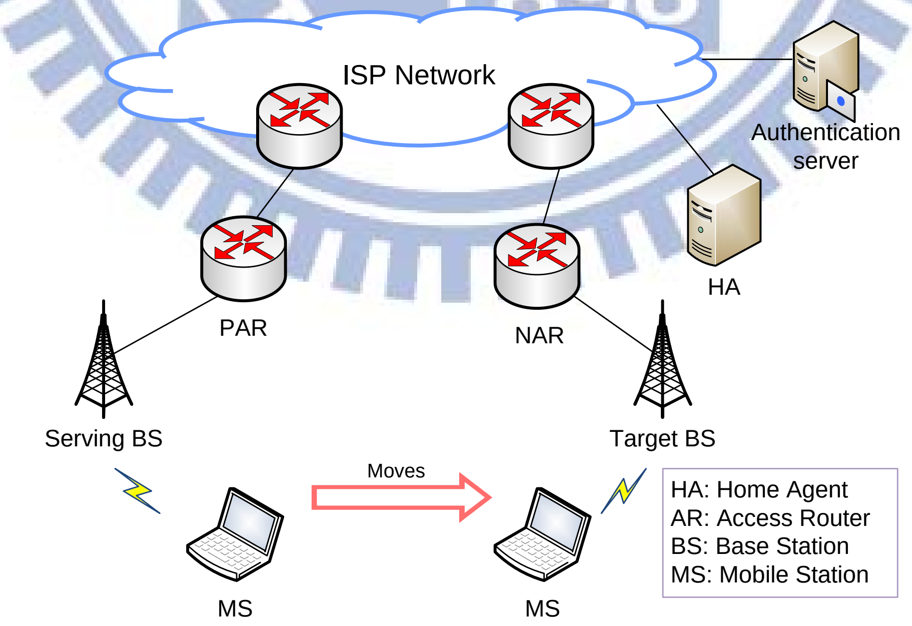

Figure 3.6: The network topology.

Message transmission delay between serving BS and MS is T_{frame}, and between PAR and MS is $T_{frame} + T_{bs\_ar}$. Therefore, in predictive mode, the total handover delay with both FM802.16e and proposed schemes can be expressed by (3.1) and (3.2) respectively.

$$12T_{frame} + 6T_{bs\_ar} + 2 \times (N_{par\_nar} + 1) \times T_{hop} + T_{dad} + T_{cont\_resol} + T_{rng} + T_{L2\_entry} \tag{3.1}$$

$$12T_{frame} + 6T_{bs\_ar} + 4 \times (N_{par\_nar} + 1) \times T_{hop} + T_{dad} \tag{3.2}$$

In predictive mode, the SDT of DL/UL with both schemes can be expressed as follows:

- SDT of DL with the FM802.16e:

$$3T_{frame} + 2T_{bs\_ar} + T_{cont\_resol} + T_{rng} + T_{L2\_entry} \tag{3.3}$$

- SDT of DL with the proposed scheme:

$$5T_{frame} \tag{3.4}$$

- SDT of UL with the FM802.16e:

$$T_{frame} + T_{cont\_resol} + T_{rng} + T_{L2\_entry} \tag{3.5}$$

- SDT of UL with the proposed scheme:

$$T_{frame} + T_{rng} \tag{3.6}$$

In the reactive mode, SDTs were expressed as follows:

- SDT of DL with the FM802.16e:

$$2T_{frame} + 2T_{bs\_ar} + 2 \times (N_{par\_nar} + 1) \times T_{hop} + T_{cont\_resol} + T_{rng} + T_{L2\_entry} + T_{dad} \tag{3.7}$$

- SDT of DL with the proposed scheme:

$$2T_{frame} + 2T_{bs\_ar} + 2 \times (N_{par\_nar} + 1) \times T_{hop} + T_{dad} \tag{3.8}$$

- SDT of UL with the FM802.16e:

$$2T_{frame} + 2T_{bs\_ar} + 2 \times (N_{par\_nar} + 1) \times T_{hop} + T_{cont\_resol} + T_{rng} + T_{L2\_entry} + T_{dad} \qquad (3.9)$$

- SDT of UL with the proposed scheme:

$$2T_{frame} + 2T_{bs\_ar} + 2 \times (N_{par\_nar} + 1) \times T_{hop} + T_{dad} \qquad (3.10)$$

SDT is affected by the velocity of MS. If the MS moves very fast, it will not receive FBAck message before it has to send MOB_HO-IND message as a final indication of handover. As a result, the handover process has to operate in reactive mode that may cause longer SDT. Therefore, the overlap distance between two BSs affects SDT. When MS is moving in the overlap area, it performs the handover preparation as well as handover decision and initiation procedures. At the edge of this area, MS must execute the handover process. So the relation among overlap distance, velocity of MS and handover preparation latency (T) can be expressed as (3.11).

$$D_{olap} \geqq v \times T \qquad (3.11)$$

Figure 3.7 shows the total handover delay and SDT in both modes of proposed scheme and FM802.16e scheme, and the effect of the MS's velocity on the SDT of the proposed scheme and FM802.16e scheme is shown in Fig. 3.8. We can clearly observe that the SDT and total handover delay of proposed scheme in both modes are smaller than that in FM802.16e scheme because the layer 2 network re-entry procedure was accomplished in advance and the contention-free ranging process.

On the other hand, the SDT of DL is lower than that of UL with proposed scheme in the predictive mode because packets can be forwarded to MS after it finishes the SA-TEK 3way handshake procedure without waiting for finish of ranging process. Besides, in reactive mode, the SDTs with both FM802.16e and proposed schemes are larger than 1000 ms due to the long DAD procedure.

In proposed/FM802.16e scheme, MS has enough time to initiate fast handover in predictive mode for velocity of MS up to 120/119 km/h, but it has to switch to the reactive mode over 120/119 km/h. Hence, MS almost can perform handover procedure in predictive mode even it moves with a vehicle speed.

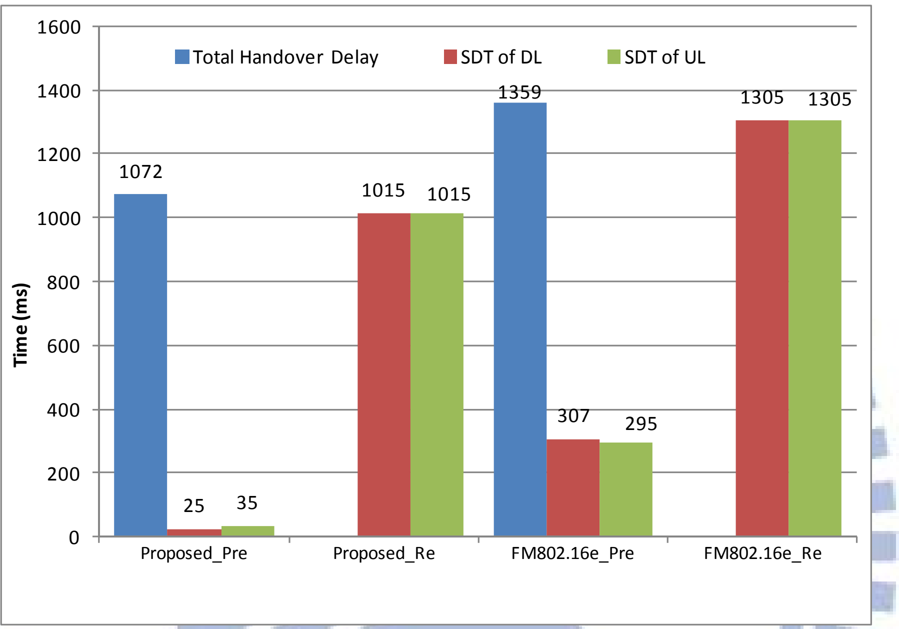

Figure 3.7: Total handover delay and SDT.

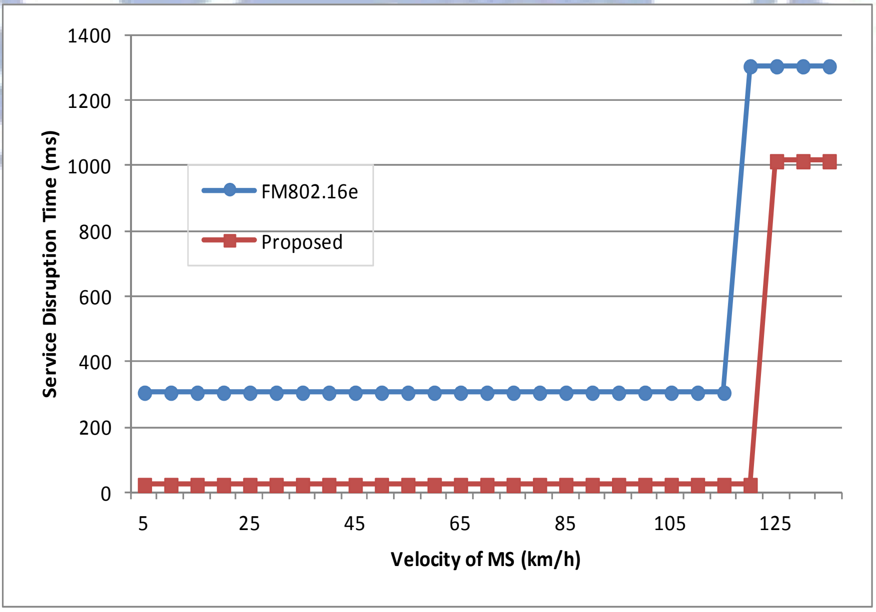

Figure 3.8: SDT in terms of velocity.

3.5 Simulation Results

We perform simulation using NS-2 (version 2.33) simulation tool [33] with Seamless and Secure Mobility Module which is designed and developed by the National Institute Standards and Technology (NIST) [34]. In this simulation, the MS moves from serving BS to target BS that belongs to different IP subnets in the same ISP network, and it receives and transmits a downlink and an uplink VoIP traffic respectively. The VoIP traffic rate is 64 Kbps and the packet size is 200 bytes. The uplink VoIP and downlink VoIP begins at 0 second and at 0.5 second, respectively. Both traffics end at 6 second. The MS starts to move at 1th second with speed of 100 km/hr (27.78 m/s) or 130 km/hr (36.11 m/s). The MOB_NBR-ADV or Pr-MOB_NBR-ADV will be sent at one second.

Figure 3.9 to Figure 3.12 show the simulation results. We can find higher downlink packet loss rate in reactive mode because of no buffering mechanism and long SDT which is larger than 1 second. However, in reactive mode the SDT of the proposed scheme is still less than that of FM802.16e. In the Fig. 3.9, we can observe that the SDT of proposed scheme is about 0.05 second in DL and 0.05 second in UL. On the other hand, In the Fig. 3.11, the SDT of FM802.16e is about 0.325 second in DL and 0.3 second in UL. And due to the buffering mechanism, there is no packet loss in predictive mode.

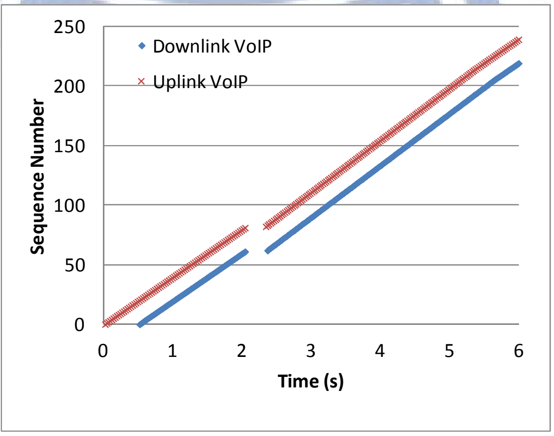

Figure 3.9: Packet sequence numbers in FM802.16e predictive mode.

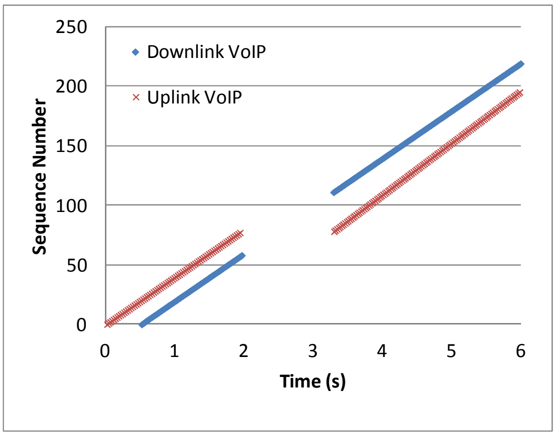

Figure 3.10: Packet sequence numbers in FM802.16e reactive mode.

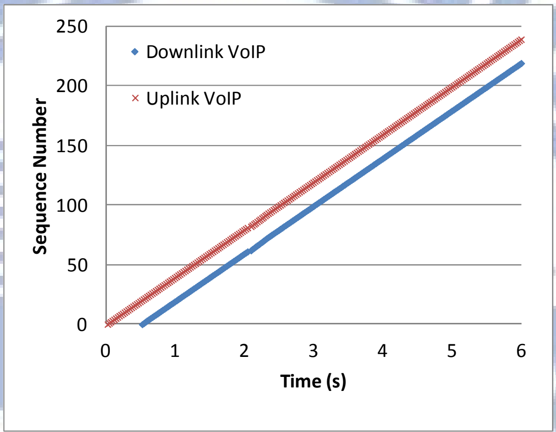

Figure 3.11: Packet sequence numbers in proposed predictive mode.

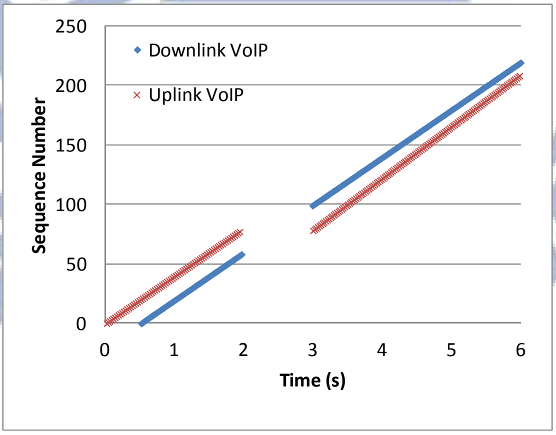

Figure 3.12: Packet sequence numbers in proposed reactive mode.

Table 3.2 shows the total handover delay and SDTs. The simulation results are almost the same as the performance analysis. In our proposed scheme, The SDT of DL and UL are both less than 50 ms. Compared with the FM802.16e, the SDT of DL can be reduced by 84.62%, and UL by 83.33% in the predictive mode. Regarding the reactive mode, our proposed scheme reduces the SDT of DL and UL by 22.64% and 22.14% respectively. On the other hand, our proposed scheme reduces total handover delay by about 20.07% in the predictive mode.

The results shows that our proposed scheme features much shorter total handover delay and SDT of DL/UL, therefore it can significantly improve the QoS for real-time applications during handover in IEEE 802.16e networks.

3.6 Chapter Summary

In this Chapter, we carefully examine the reasons which lead to long SDT and then propose a cross-layer IPv6 fast handover network architecture for IEEE 802.16e to accommodate the delay sensitive real-time applications. The total handover delay and SDT were reduced by integrating the link layer and IP layer messages and using a pre-layer2 network re-entry mechanism. The performance analysis result showed that our proposed scheme features much smaller SDT than the FMIPv6 over 802.16e scheme. As a result of a small SDT, the impact of handover on real-time services can be minimized.

Table 3.2: Total handover delay and SDTs in both schemes.

	Total handover delay	SDT			
	Predictive	Predictive		Reactive	
		DL	UL	DL	UL
FM802.16e	1370 ms	325 ms	300 ms	1325 ms	1355 ms
Proposed	1095 ms	50 ms	50 ms	1025 ms	1055 ms
Improvement	20.07%	84.62%	83.33%	22.64%	22.14%

Chapter 4

A Host-based Fast Mobility Scheme (HFMS) in 802.16j Mobile RS Mode

IEEE 802.16j multi-hop relay standard [20] introduces relay station (RS) to gain coverage extension and throughput enhancement in WiMAX networks. A mobile RS (MRS) can be mounted on a vehicle, such as a bus or train, connected to a BS via a wireless link. In this case, the MRS provides a fixed access link to end terminals (i.e., mobile stations) riding on the vehicle. However, the introduction of MRS also leads to new handover problem.

4.1 Problem Statements

In IEEE 802.16e WiMAX network, cross-layering handover procedure has been studied and it can reduce SDT and solve the packet loss problem. Most solutions focus on forcing the mobile station's (MS's) link-layer to cooperate with MS's IP layer, then the link-layer and IP layer handover procedures can be carried out simultaneously. However, these approaches only can be used in IEEE 802.16e WiMAX networks because these protocols assume that the link-layer and IP layer handover procedures are both performed by MS.

In IEEE 802.16j MRS mode [20], the MRS and MS perform the link-layer and IP layer handover procedures, respectively because the MSs will still be attached to its associated MRS when the MRS moves from one base station (BS) to the other. The MS's IP layer will not obtain any triggers from MRS's link-layer. Therefore, the previous cross-layer approaches [5, 26, 31, 35] for IEEE 802.16e cannot be applied and only the non-cross-layer schemes such as Mobile IPv6 (MIPv6) scheme or the Proxy Mobile IPv6 (PMIPv6) can be used in MRS mode. The considerably longer duplicate address detection (DAD) process and sequential handover procedures in MIPv6 scheme lead to packet loss and long SDT.

On the other hand, for supporting MS's mobility in the IEEE 802.16j fixed RS (FRS) mode, the work in [36] classifies the handover scenarios in the multi-hop relay networks, and then defines the MAC handover procedure and proposes the optimized message transmission route as well as the effective message delivery process for reducing the number and the size of MAC management messages on the relay link. The work in [37] proposes a greedy RS grouping algorithm to overcome the frequent handovers problem in multi-hop relay networks. The algorithm groups neighboring RSs together to form an RS group which can be regarded as a logical RS with larger coverage. In [38], an efficient adaptive contention-based approach is proposed for the initial ranging and bandwidth request to achieve low handover delay, low handover dropping, and low collision probability. In [39], a fast handover scheme to apply FMIPv6 to 802.16j networks is proposed. The work in [40] proposes extending existing IP mobility and encapsulation/tunneling technologies (particularly point-to-point) to provide a stable network access for mobile users in IEEE 802.16j multi-hop mobile WiMAX system.

Besides, the IEEE 802.16m [41] and Third Generation Partnership Project (3GPP) Long Term Evolution (LTE)-Advanced [42] also provide enhanced link layer handover mechanisms for providing short handover interruption time. However, they are optimized only for non-mobile relay, i.e., the RS is attached to a designated BS as a fixed RS. Therefore, the work in [43] proposes an improved handover scheme for mobile relays in IEEE 802.16m. However, it does not consider the inter-ASN handover, i.e., layer 3 handover.

In addition, the network mobility [44, 45] allows session continuity for every node in the mobile network as the network moves. It also allows every node in the mobile network to be reachable while moving around. An outstanding network mobility solution [46] has been proposed for reducing SDT, it is still a challenge to reduce SDT in MRS mode due to different characteristic between the MRS mode and network mobility. The former behaves like a mobile BS while the latter features mobile access router (AR) with IP layer functionality.

In this study, we proposed a host-based fast mobility scheme with cross-layering design to solve the packet loss problem as well as to reduce the SDT in MRS mode. The proposed scheme allows the link-layer handover in MRS to cooperate with the IP layer handover in MS to achieve the parallel handover. On the other hand, we also integrate our pre-layer 2 network re-entry procedure (Pre-L2NR) scheme into the host-based fast mobility scheme.

The analysis and simulation results show that our proposed scheme can reduce both SDT and packet loss significantly so as to achieve seamless mobility for the MS in IEEE 802.16j MRS mode. As a result, the mobile users can experience the satisfactory QoS.

4.2 Related Works

4.2.1 IEEE 802.16j MRS Handover Procedure

IEEE 802.16j defines a link-layer handover procedure for MRS when MRS moves and needs to change the BS. The MRS handover procedure can be decomposed into three phases: handover preparation, handover decision and initiation, and handover execution. Figure 4.1 illustrates the MRS handover procedure.

The handover preparation phase includes network topology advertisement, scanning process, and association procedure. During the network topology advertisement procedure, a BS broadcasts information about the network topology by mobile neighbor advertisement (MOB_NBR-ADV) message which provides an MRS with the current network identification and information about neighboring BSs. Then, the MRS may initiate a scanning process by exchanging mobile scanning interval allocation request (MOB_SCN-REQ) and mobile scanning interval allocation response (MOB_SCN-RSP) messages with serving BS (SBS) to find and monitor the suitable neighboring BSs as a target for a handover. Association procedure is an optional initial ranging procedure occurring during the scanning interval with respect to one of the neighbor BSs.

In the handover decision and initiation phase, an MRS decides to switch from SBS to target BS (TBS). The MRS initiates the handover by sending a mobile MS handover request (MOB_MSHO-REQ) message to SBS. After receiving the MOB_MSHO-REQ, the SBS will reply a mobile BS handover response (MOB_BSHO-RSP) message with recommended TBSs to the MRS as well as send the MAC addresses and connection identifications (CIDs) of the MSs under MRS to TBS over the backbone.

In the handover execution phase, the MRS sends a mobile handover indication (MOB_HO-IND) message to the SBS as a final indication of handover. After that, packet transfer between the MRS and SBS is disallowed. Then, the MRS performs downlink synchronization, raging, and layer 2 network re-entry procedure (L2 NR) to the TBS. The TBS assigns new CIDs for MSs and sends them to MRS by ranging response (RNG-RSP) message, then MRS creates mapping between old and new CIDs for each MS. After handover execution phase, the TBS becomes the new SBS and starts to provide service to the MRS.

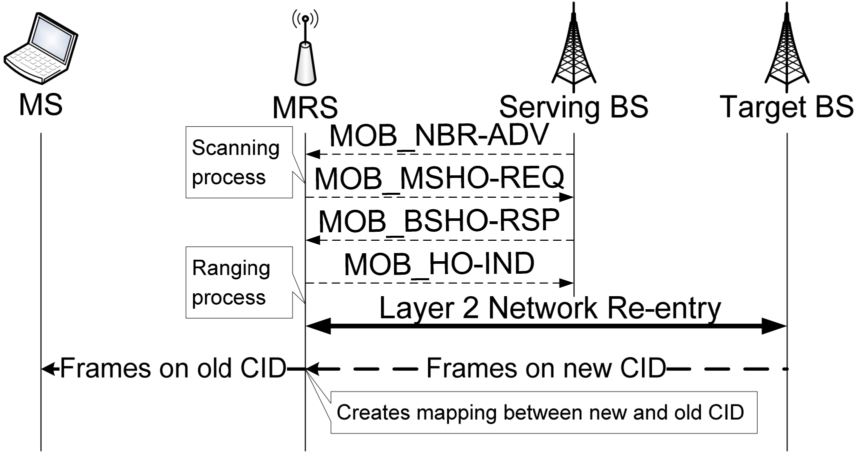

Figure 4.1: MRS handover procedure.

4.2.2 MIPv6 handover procedure in MRS mode

In MIPv6, subsequent to a link-layer handover of MRS, the MS performs the IP layer handover procedure including movement detection, new care of address (CoA) configuration and duplicate address detection (DAD), and binding update (Fig. 4.2). The sequential handover procedures lead to a long SDT and packet loss. The detailed MIPv6 handover procedure is described as follows.

1. After a link-layer handover of MRS, the MS initiates the IP layer handover by the movement detection. The MS detects that it is moving to a new subnet by receiving the router advertisement (RA) message periodically sent by the new AR (NAR). The MS can also request the NAR to send RA by sending a router solicitation (RS) message.
2. Through RS and RA messages, the MS obtains the information to create a new CoA, and then it performs the DAD process to confirm its new CoA by exchanging neighbor solicitation (NS) and neighbor advertisement (NA) messages.
3. Only after completing DAD, the MS could exchange binding update (BU) and binding acknowledge (BAck) with the home agent (HA) for updating MS's current location.

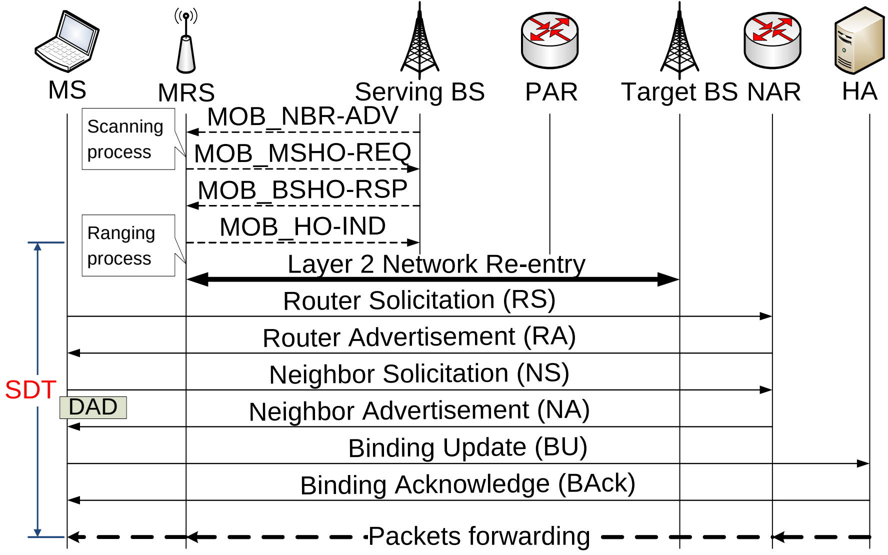

Figure 4.2: MIPv6 handover procedure in MRS mode.

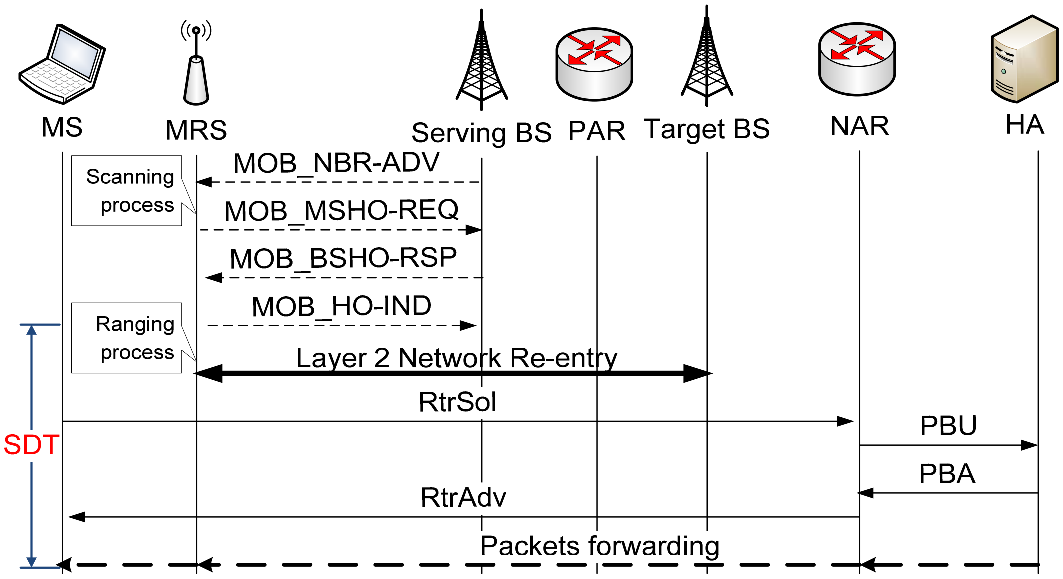

Figure 4.3: PMIPv6 handover procedure in MRS mode.

4.2.3 PMIPv6 handover procedure in MRS mode

In PMIPv6, the NAR must conduct the IP layer handover on behalf of MSs under an MRS after it receives a router solicitation (RtrSol) message from them. Figure 4.3 shows the PMIPv6 handover procedure in MRS mode.

The procedure starts when the NAR sends a proxy binding update (PBU) to the MS's HA for updating the current location of the MS. Upon accepting this PBU, the HA sends back a proxy binding acknowledge (PBA) and sets up a bi-directional tunnel to the NAR. The packet loss may occur during the periods of the L2 NR and PMIPv6 procedure. The SDT is affected by the interval of RtrSol sent from MS. The detailed PMIPv6 procedure can be found in the previous report [6].

4.3 Host-based Fast Mobility Scheme (HFMS)

Because the original cross-layer mechanism in FMIPv6 cannot be applied in MRS mode, we proposed a new cross-layer scheme between MRS's link-layer and MS's IP layer. Our proposed cross-layering scheme, called host-based fast mobility scheme (HFMS) can reduce SDT by performing the MRS's link-layer and MS's IP layer handover procedures simultaneously, and avoid packet loss by a buffering mechanism. The proposed scheme enables the MSs to carry out IP layer handover when the MRS performs link-layer handover through exchanging the proposed management messages including *MRS_NBR-ADV*, *MRS_HO-REQ*, *MRS_HO-RSP*, and *MRS_HO-CLT* between the MS and MRS. The detailed messages are defined as follows. In addition, the MS should possess the basic functionality of FMIPv6 in our proposed scheme.

4.3.1 Definition of the proposed messages

MRS_NBR-ADV: The functionality of MOB_NBR-ADV sent from a BS is to notify the MRS the information about neighboring BSs. The neighboring BSs are the candidates of target BS for MRS, and thus the MSs must obtain the information of the neighboring BSs and then obtain the corresponding AR information for conducting subsequent IP layer handover procedure. Therefore, we designed an *MRS_NBR-ADV* message which includes the information of neighboring BSs for MRS to send to MSs. After receiving the *MRS_NBR-ADV*, the MS will be triggered to send a RtSolPr (Router Solicitation for Proxy) for getting the associated AR information of the new BS and produce a list of [BSID, AR-Info] tuple(s).

MRS_HO-REQ: The MRS can decide the target BS after it receives the MOB_BSHO-RSP message from serving BS. Therefore, the MRS must notify the MSs the information of target BS. After that, the MSs can send an FBU (Fast Binding Update) to current AR for performing IP layer handover procedure. In the proposed scheme, the information of target BS will be sent to MSs by *MRS_HO-REQ*.

MRS_HO-RSP: When the MSs finish the IP layer handover procedure, it has to notify the MRS to conduct subsequent link-layer switch process through *MRS_HO-RSP* message. The

MRS will conduct the subsequent link-layer only when it receives *MRS_HO-RSP* from all MSs under it or the signal strength of serving BS is less than a threshold.

MRS_HO-CLT: When the MRS finishes the layer 2 network re-entry process, it must notify the MSs to send an FNA (Fast Neighborhood Advertisement) message to the new AR for obtaining the buffered packets. This functionality is achieved by the proposed *MRS_HO-CLT* message.

■ The detailed functionality of the proposed scheme

➢ MRS_NBR-ADV [BSID(s)]

Sender: MRS	Receiver: MSs under MRS	Parameter: BSID(s)
When triggered: an MRS receives the MOB_NBR-ADV from a BS.		
Effect of receipt: If the BSID (s) in MRS_NBR-ADV was not resolved to the corresponding AR information, the MS will be triggered to exchange RtSolPr (Router Solicitation for Proxy) and PrRtAdv (Proxy Router Advertisement) with the current AR to get the corresponding subnet information.		

➢ MRS_HO-REQ [Target BSID]

Sender: MRS	Receiver: MSs under MRS	Parameter: Target BSID
When triggered: an MRS receives an MOB_BSHO-RSP and decides which BS (i.e., target BS) it wants to switch.		
Effect of receipt: The MS will realize the target BS. After then, it will be triggered to send an FBU to the current AR for performing IP layer handover procedure.		

- **MRS_HO-RSP**

Sender: MS	Receiver: MRS	Parameter: none
When triggered: an MS receives an FBAck (Fast Binding Acknowledgement), indicating that the MS's IP layer handover has finished.		
Effect of receipt: The MRS will send an MOB_HO-IND to the current BS as a final indication of handover.		

- **MRS_HO-CLT**

Sender: MRS	Receiver: MSs under MRS	Parameter: none
When triggered: an MRS finishes the layer 2 network re-entry process.		
Effect of receipt: The MS will realize that the link-layer handover is finished. Thus, it sends an FNA to new AR for getting the buffered packets.		

4.3.2 The proposed HFMS handover procedures

The proposed scheme can be divided into predictive and reactive modes as in the FMIPv6. The detailed scheme with predictive mode (Fig. 4.4) is described as follows.

1. The serving BS (SBS) periodically broadcasts information of neighboring BSs via MOB_NBR-ADV message.
2. Upon receiving MOB_NBR-ADV, the MRS will inform MS about information of neighboring BSs by *MRS_NBR-ADV* and perform a scanning process for a future handover.
3. The MS may find new BSs from *MRS_NBR-ADV*. Then, it will request the corresponding subnet information by exchanging RtSolPr and PrRtAdv with the previous AR (PAR)[2].

---

[2] The functionalities of RtSolPr, PrRtAdv, FBU, HI, HAck, FBAck, and FNA are similar to FMIPv6.

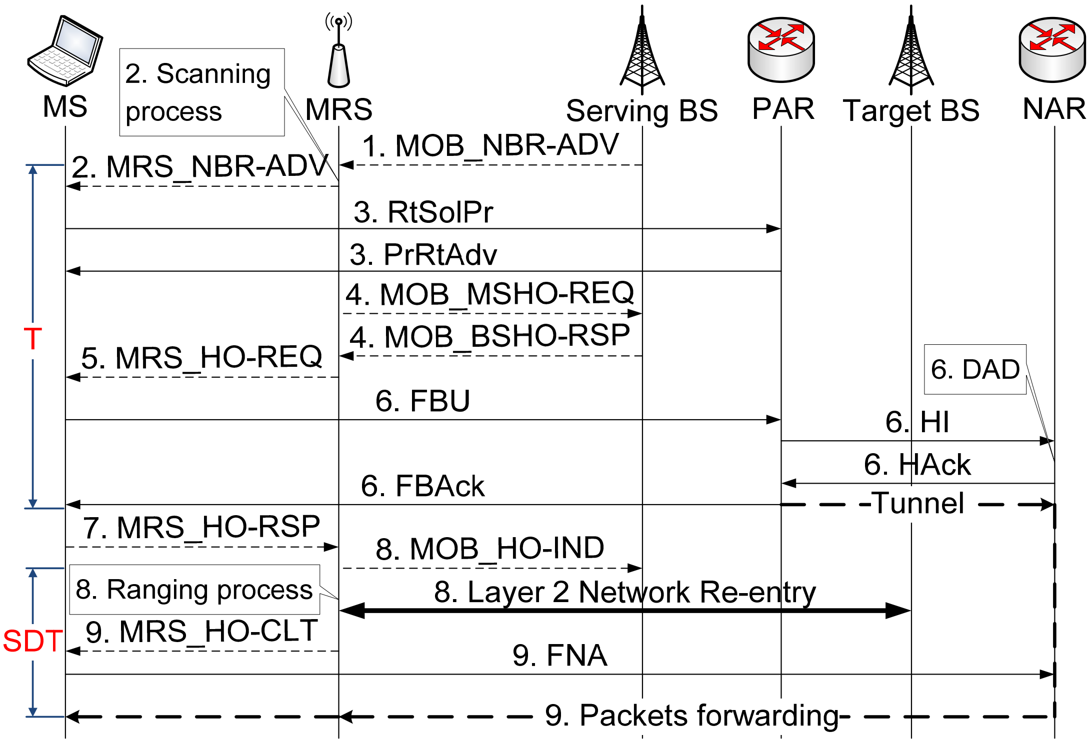

Figure 4.4: The HFMS in predictive mode.

4. According to either signal strength or QoS parameters, the MRS may initiate handover via MOB_MSHO-REQ. The SBS can choose possible target BSs (TBSs) for MRS via MOB_ BSHO-RSP. The MRS will decide the TBS after the process.

5. By *MRS_HO-REQ* from the MRS, the MS is informed that there is an impending link-layer handover to the TBS.

6. Upon reception of *MRS_HO-REQ*, the MS finds the corresponding AR and sends FBU, including the new CoA configured by MS, to the PAR for performing IP layer handover. After receiving HI (Handover Initiation) from the PAR, the new AR (NAR) confirms the new CoA by the DAD process and replies HAck (Handover Acknowledge) to PAR. Afterward, the tunnel between PAR and NAR is established, and the PAR will copy and forward MS's packets to the NAR. Moreover, the PAR will inform the MS of a successful IP layer handover procedure via FBAck, and the NAR will buffer the packets from PAR for MS to avoid packet loss in the subsequent handover procedures.

7. Since the IP layer handover is finished and tunnel is established, the MS will notify the MRS to conduct subsequent link-layer switch process through *MRS_HO-RSP* message.
8. The MRS sends MOB_HO-IND to SBS as a final indication of handover and performs the ranging process and layer 2 network re-entry process (L2NR) after receiving *MRS_HO-RSP*.
9. The MRS sends *MRS_HO-CLT* to the MS immediately after finishing the L2NR. Upon receiving *MRS_HO-CLT*, the MS realizes that the link-layer handover is finished. Then, it will notify the NAR to deliver the buffered packets to it by FNA.

If the MRS moves at a high speed, the MS may not receive FBAck until the MRS conducts L2NR and sends *MRS_HO-CLT* to it. Therefore, the MS will consider that IP layer handover procedure may not be finished and it may operate in reactive mode (Fig. 4.5).

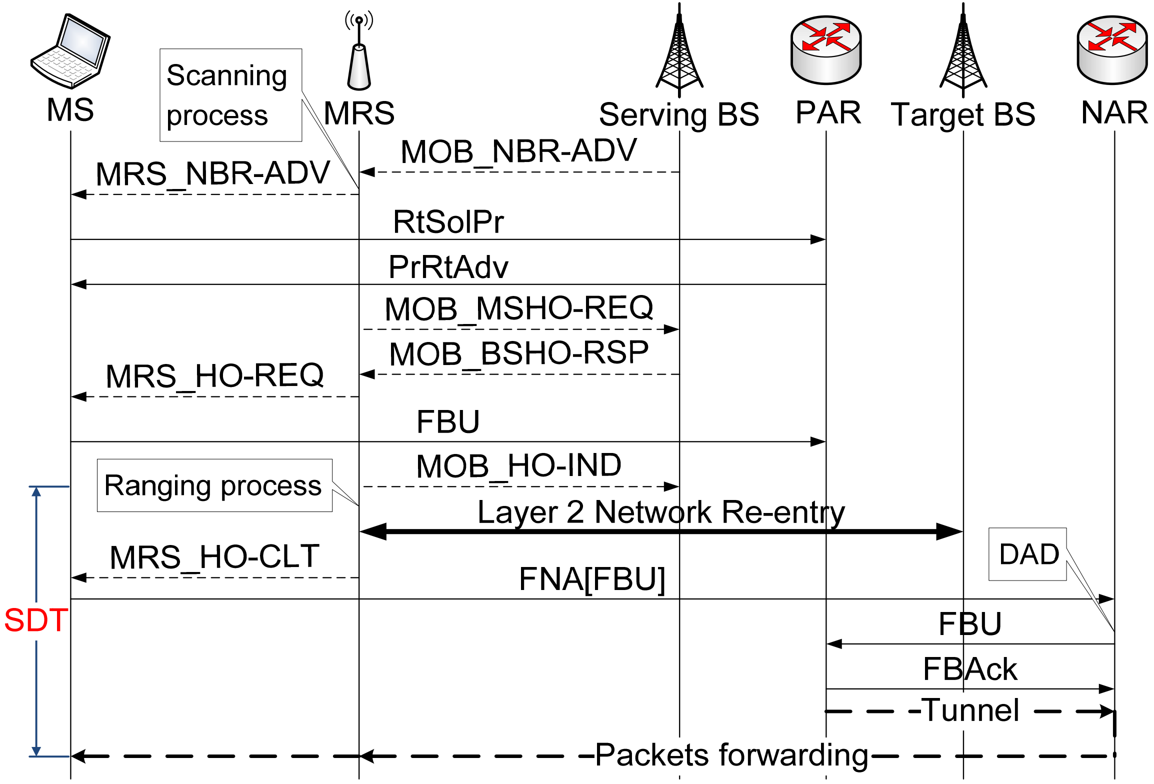

Figure 4.5: The HFMS in reactive mode.

In this situation, the MS will send FNA with an encapsulated FBU to the NAR after it receives *MRS_HO-CLT*. Upon receiving FNA, the NAR verifies the new CoA by DAD and forwards the inner FBU to the PAR for establishing a tunnel. After replying FBAck to the NAR, the PAR starts to forward the packets which are buffered in the old CoA and destined to the new CoA, and the NAR will deliver the packets to MS.

4.4 Host-based Fast Mobility Scheme with Pre-layer 2 network re-entry procedure (HFMS-Pre-L2NR)

Although the proposed host-based fast mobility scheme allows the link-layer handover in MRS to cooperate with the IP layer handover in MS to achieve the parallel handover. The MRS still needs to perform contention-based ranging process and layer 2 network re-entry procedure. For further reducing the SDT, we add the pre-layer 2 network re-entry procedure (Pre-L2NR) to the host-based fast mobility scheme.

4.4.1 Integration of Layer 2 and Layer 3 Messages

As the scheme proposed in Chapter 3, the AR information will be included in the MOB_NBR-ADV, and the new integrated message is called *Pr-MOB_NBR-ADV*. After receiving the *Pr-MOB_NBR-ADV*, the MRS will send the *Pr-MRS_ NBR-ADV* to the MSs. In this case, the MSs can obtain the [BSID, AR-Info] tuple(s), therefore, they need not to exchange RtSolPr and PrRtAdv with the current AR to get the corresponding subnet information.

4.4.2 Pre-layer 2 network re-entry procedure (Pre-L2NR)

The functionality of pre-layer 2 network re-entry procedure is the same with the scheme proposed in Chapter 3. The Pre-L2NR includes acquirement of dedicated ranging time slot, temporary authentication mechanism, and pre-service flow construction for MRS. The AK, TEK, and KEK using between the SBS and MRS will be reused between the TBS and the MRS temporarily after the MRS connects to the TBS. However, the MRS still needs to perform the full authentication procedure hereafter. As a result, the MRS can send/receive data before finishing the full authentication.

Based on the Pre-L2NR scheme proposed here, after the SBS receives an MOB_MSHO-REQ message which contains the candidate TBSs selected by the MRS for future handover, it will issue a HO_notification-REQ message to negotiate with these candidate TBSs regarding the information of the MRS. The HO_notification-REQ message contains the parameters of MRS's MAC address, serving BSID, the initial ranging process, basic capabilities of MRS, temporary authentication, registration, service flow construction, QoS, and the information of MSs under the MRS. The parameters for authentication include the AK, TEK, and KEK using in the current BS.

As a candidate TBS obtains these parameters, both an opportunity for unicast ranging and the new CIDs for traffics will be provided to the MRS. Note that the candidate TBS only allocates the bandwidth for ranging process of the MRS at the moment, while the bandwidth allocations for actual traffics will not be available until the MRS sends a RNG-REQ message to indicate its arrival. Furthermore, the candidate TBS starts a timer for retaining the resources. The SBS will get the results from these candidate TBSs through a HO_notification-RSP message. Then, the SBS forwards the results to the MRS through the MOB_BSHO-RSP message.

Upon receiving an MOB_HO-IND message, the SBS will issue a HO_Decision message to notify these candidate TBSs (except the TBS) the final choice of the MRS. The resources retained for the MRS will be released upon the expiration of the timer or receipt of a HO_Decision message. For performing the temporary authentication mechanism in the proposed scheme, the TBS will reply an RNG-RSP with an encapsulated SA-TEK Challenge to the MRS after it receives the RNG-REQ message. The SA-TEK Req and SA-TEK Rsp will be encapsulated and exchanged in the next RNG-REQ and RNG-RSP, respectively. After finishing the SA-TEK 3way handshake, the MRS and the TBS not only authenticate each other, but confirm the consistency of AK between them. Therefore, they can use the temporary TEK to encrypt data.

The MS under the MRS can begin to receive packet after it finishes the layer 3 handover procedure (i.e., exchanging FNA and FBAck with NAR). Finally, the MRS still needs to perform the full authentication procedure. Moreover, the MRS can issue the RNG-REQ message without competition because it owns a dedicated time slot for ranging process.

4.4.3 The HFMS-Pre-L2NR handover procedures

The HFMS-Pre-L2NR can also be divided into predictive and reactive modes. The detailed scheme with predictive mode (Fig. 4.6) is described as follows. And the HFMS-Pre-L2NR with reactive mode is shown in Fig.4.7.

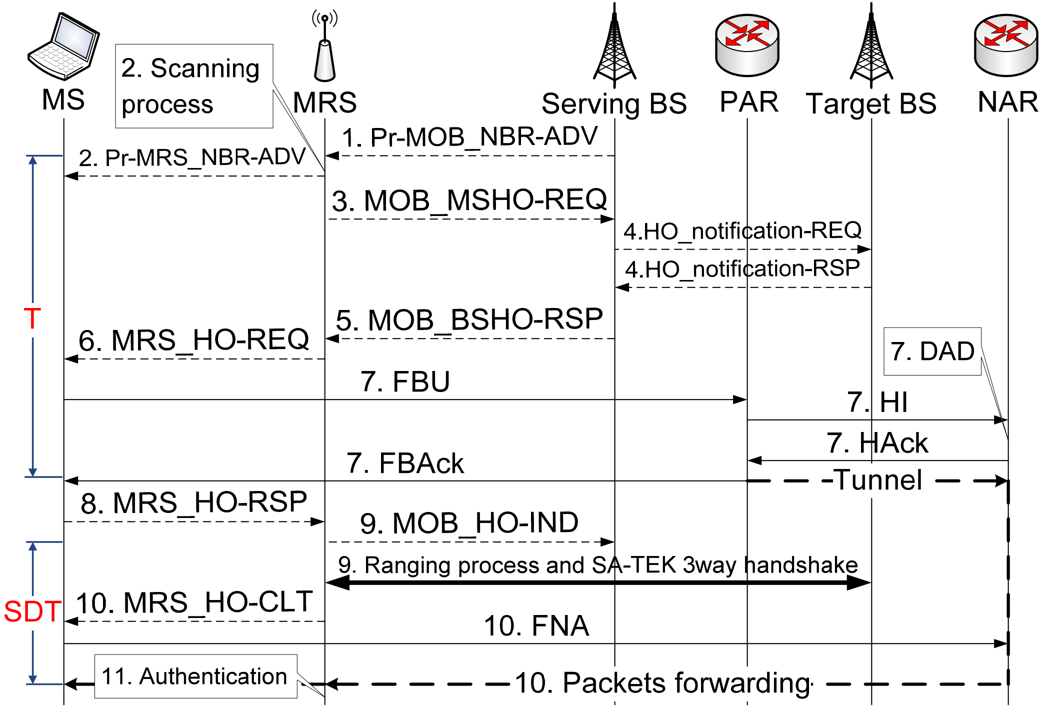

Figure 4.6: The HFMS-Pre-L2NR in predictive mode.

1. The SBS periodically broadcasts information of neighboring BSs and corresponding ARs via *Pr-MOB_NBR-ADV* message.
2. Upon receiving *Pr-MOB_NBR-ADV*, the MRS will inform MS about information of neighboring BSs and corresponding ARs by *Pr-MRS_NBR-ADV* and perform a scanning process for a future handover.
3. According to either signal strength or QoS parameters, the MRS may initiate handover via MOB_MSHO-REQ.
4. The SBS negotiates with these candidate BSs through exchanging the HO_notification-REQ and HO_notification-RSP messages. After this step, these candidate BSs begin to retain resources for the MRS.
5. The SBS informs the MRS the negotiated result and chooses possible TBSs for MRS via MOB_ BSHO-RSP. The MRS will decide the TBS after the process.
6. By *MRS_HO-REQ* from the MRS, the MS is informed that there is an impending link-layer handover to the TBS.
7. Upon reception of *MRS_HO-REQ*, the MS finds the corresponding AR and sends FBU, including the new CoA configured by MS, to the PAR for performing IP layer handover. After receiving HI from the PAR, the NAR confirms the new CoA by the DAD process and replies HAck to PAR. Afterward, the tunnel between PAR and NAR is established, and the PAR will copy and forward MS's packets to the NAR. Moreover, the PAR will inform the MS of a successful IP layer handover procedure via FBAck, and the NAR will buffer the packets from PAR for MS to avoid packet loss in the subsequent handover procedures.
8. Since the IP layer handover is finished and tunnel is established, the MS will notify the MRS to conduct subsequent link-layer switch process through *MRS_HO-RSP* message.

9. After receiving *MRS_HO-RSP*, the MRS sends MOB_HO-IND to SBS as a final indication of handover. Next, it sends an RNG-REQ with a dedicated time slot to the TBS for ranging process. After receiving the RNG-REQ, the TBS will reply an RNG-RSP with an encapsulated SA-TEK Challenge to the MRS to perform the SA-TEK 3way handshake procedure. After finishing the ranging process and SA-TEK 3way handshake procedure, the TBS begins to allocate bandwidth for the MRS. The MRS can send/receive packets after completing the SA-TEK 3way handshake procedure and ranging process.

10. The MRS sends *MRS_HO-CLT* to the MS immediately after finishing the SA-TEK 3way handshake procedure and ranging process. Upon receiving *MRS_HO-CLT*, the MS realizes that the link-layer handover is finished. Then, it will notify the NAR to deliver the buffered packets to it by FNA.

11. The MRS performs the full authentication with TBS.

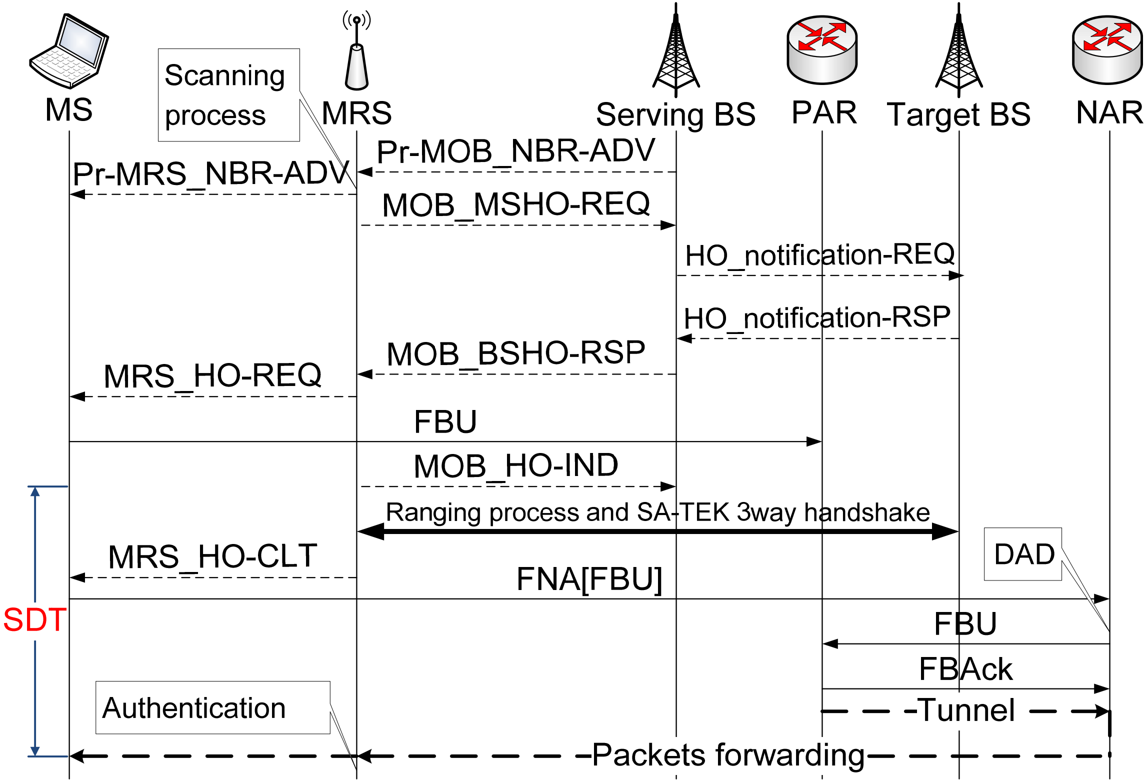

Figure 4.7: The HFMS-Pre-L2NR in reactive mode.

4.5 Performance Analysis and Simulation Results

4.5.1 Performance Analysis

Parameters used in the performance analysis and simulation are listed in Table 4.1 and described as follows.

Table 4.1: Parameters used in performance analysis and simulation.

Parameter	Value	Description
$T_{BS\text{-}AR}$	1 ms	The transmission time between BS and AR
$T_{AR\text{-}HA}$	6 ms	The transmission time between AR and HA
$T_{PAR\text{-}NAR}$	4 ms	The transmission time between PAR and NAR
T_{frame}	5 ms	Frame duration of IEEE 802.16j PHY
t	-	The elapsed time after the MRS finishes L2NR until the MS sends an RtrSol
T_{cont_resol}	50 ms	Latency of contention resolution procedure during contention based ranging process.
T_{rng}	30 ms	Latency of ranging process. It usually needs at least six frames.
T_{L2}	210 ms	IEEE 802.16j layer 2 network re-entry procedure delay
T_{DAD}	1,000 ms	The DAD process delay
T_F	-	The packets forwarding delay
$T_{HO\text{-}IND}$	-	Latency of the MOB_HO-IND message
$T_{RS/RA}$	-	Latency of Router Solicitation plus Router Advertisement
$T_{NS/NA}$	-	Latency of Neighbor Solicitation and Neighbor Advertisement
$T_{BU/BAck}$	-	Latency of Binding Update and Binding ACK
$T_{RtrSol/RtrAdv}$	-	Latency of Router Solicitation and Router Advertisement
$T_{PBU/PBA}$	-	Latency of Proxy Binding Update and Proxy Binding Ack
$T_{MRS\_HO\text{-}CLT}$	-	Latency of the MRS_HO-CLT message
T_{FNA}	-	Latency of the FNA message
$T_{FBU/FBA}$	-	Latency of FBU and FBAck
υ	-	The velocity of MRS
D_{olap}	40 m	The overlap distance between two BSs
T	-	The handover preparation latency
T_{scan}	10 ms	The scanning process delay

$T_{BS\text{-}AR}$, $T_{AR\text{-}HA}$, and $T_{PAR\text{-}NAR}$ represent the transmission time between BS and AR, AR and HA, and PAR and NAR, respectively. T_{frame} is the link-layer frame duration and t is the elapsed time after the MRS finishes L2NR until the MS sends an RtrSol. T_{cont_resol} and T_{rng} represent the latency of contention resolution procedure during contention-based ranging process and the ranging process delay, respectively. T_{L2}, T_{DAD}, and T_F represent the L2NR delay, DAD process delay, and packets forwarding delay, respectively.

The message transmission time between MS and MRS as well as MRS and BS is T_{frame}. Hence, the message transmission time between MS and BS as well as between MS and AR equals twice T_{frame}, and $2T_{frame} + T_{BS\text{-}AR}$, respectively.

The SDT is calculated at the MS as from the reception of the last data packet from the PAR to the reception of the first data packet from the NAR. Hence, the SDT of using MIPv6, PMIPv6, HFMS, and HFMS-Pre-L2NR can be calculated as follows:

- In MIPv6, six messages including RS, RA, NS, NA, BU, and BAck are exchanged after the MRS finishes the contention-based ranging and L2NR. The first four messages are exchanged between the MS and the NAR, and each message takes $2T_{frame} + T_{BS\text{-}AR}$. The BU and BAck are exchanged between the MS and HA, taking $2(2T_{frame} + T_{BS\text{-}AR} + T_{AR\text{-}HA})$. The packets forwarding delay, T_F, equals $2T_{frame} + T_{BS\text{-}AR} + T_{AR\text{-}HA}$ because the packets have to be forwarded from HA to MS. Besides, the DAD processing delay and L2NR delay should be added. As a result, the SDT in MIPv6 can be expressed as follows.

$$
\begin{aligned}
SDT_{MIPv6} &= T_{cont\_resol} + T_{rng} + T_{L2} + T_{RS/RA} + T_{NS/NA} + T_{DAD} + T_{BU/BAck} + T_F \\
&= T_{cont\_resol} + T_{rng} + T_{L2} + 2(2T_{frame} + T_{BS\text{-}AR}) + 2(2T_{frame} + T_{BS\text{-}AR}) + T_{DAD} + \\
&\quad 2(2T_{frame} + T_{BS\text{-}AR} + T_{AR\text{-}HA}) + (2T_{frame} + T_{BS\text{-}AR} + T_{AR\text{-}HA}) \\
&= 14T_{frame} + 7T_{BS\text{-}AR} + 3T_{AR\text{-}HA} + T_{cont\_resol} + T_{rng} + T_{L2} + T_{DAD}
\end{aligned}
$$

- In PMIPv6, after the MRS finishes L2 NR, the process idles for an uncertain time until the RtrSol is sent by the MS. Hence, the factor t representing the above elapse time must be taken into account. The latency of RtrSol plus RtrAdv exchanged between the MS and NAR equals $2(2T_{frame} + T_{BS\text{-}AR})$. The PBU and PBA are exchanged between NAR and HA, hence the latency equals $2T_{AR\text{-}HA}$. In addition, the T_F equals $2T_{frame} + T_{BS\text{-}AR} + T_{AR\text{-}HA}$ because the packets must be forwarded from HA to MS. Therefore, the SDT in PMIPv6 can be expressed as follows.

$$\begin{aligned} SDT_{PMIPv6} &= T_{cont\_resol} + T_{rng} + T_{L2} + t + T_{RtrSol/RtrAdv} + T_{PBU/PBA} + T_F \\ &= T_{cont\_resol} + T_{rng} + T_{L2} + t + 2(2T_{frame} + T_{BS\text{-}AR}) + 2T_{AR\text{-}HA} + (2T_{frame} + T_{BS\text{-}AR} + T_{AR\text{-}HA}) \\ &= 6T_{frame} + 3T_{BS\text{-}AR} + 3T_{AR\text{-}HA} + T_{cont\_resol} + T_{rng} + T_{L2} + t \end{aligned}$$

- In the HFMS in predictive mode, after finishes L2NR, the MRS sends the MRS_HO-CLT to the MS. Then, the MS sends the FNA to NAR. Thus, the latency of the two messages equals $3T_{frame} + T_{BS\text{-}AR}$. In addition, the T_F equals $2T_{frame} + T_{BS\text{-}AR}$ because the packets are forwarded from NAR to MS. Hence, the SDT of the HFMS in predictive mode can be expressed as follows.

$$\begin{aligned} SDT_{HFMS\_pre} &= T_{cont\_resol} + T_{rng} + T_{L2} + T_{MRS\_HO\text{-}CLT} + T_{FNA} + T_F \\ &= T_{cont\_resol} + T_{rng} + T_{L2} + T_{frame} + (2T_{frame} + T_{BS\text{-}AR}) + (2T_{frame} + T_{BS\text{-}AR}) \\ &= 5T_{frame} + 2T_{BS\text{-}AR} + T_{cont\_resol} + T_{rng} + T_{L2} \end{aligned}$$

- In the HFMS in reactive mode, after finishes L2NR, the MRS sends the MRS_HO-CLT to the MS. Then, the MS will send the FNA[FBU] to NAR. Next, the NAR will exchange the FBU and FBAck with the PAR and perform the DAD procedure. Thus, the latency of the four messages equals $3T_{frame} + T_{BS\text{-}AR} + 2T_{PAR\text{-}NAR}$. In addition, the T_F equals $T_{PAR\text{-}NAR} + 2T_{frame} + T_{BS\text{-}AR}$ because the packets are forwarded from PAR to NAR, then from NAR to the MS. Hence, the SDT of the HFMS in reactive mode can be expressed as follows.

$$\begin{aligned} SDT_{HFMS\_re} &= T_{cont\_resol} + T_{rng} + T_{L2} + T_{MRS\_HO\text{-}CLT} + T_{FNA[FBU]} + T_{DAD} + T_{FBU/FBAck} + T_F \\ &= T_{cont\_resol} + T_{rng} + T_{L2} + T_{frame} + (2T_{frame} + T_{BS\text{-}AR}) + T_{DAD} + 2T_{PAR\text{-}NAR} \end{aligned}$$

$$+ (T_{PAR\text{-}NAR} + 2T_{frame} + T_{BS\text{-}AR})$$

$$= 5T_{frame} + 2T_{BS\text{-}AR} + 3T_{PAR\text{-}NAR} + T_{cont\_resol} + T_{rng} + T_{L2} + T_{DAD}$$

- In the HFMS-Pre-L2NR in predictive mode, after the MRS finishes the ranging process and SA-TEK 3way handshake, it will send the MRS_HO-CLT to the MS. Then, the MS sends the FNA to NAR. Thus, the latency of the two messages equals $3T_{frame} + T_{BS\text{-}AR}$. In addition, the T_F equals $2T_{frame} + T_{BS\text{-}AR}$ because the packets are forwarded from NAR to MS. Hence, the SDT of the HFMS-Pre-L2NR in predictive mode can be expressed as follows.

$$SDT_{HFMS\text{-}Pre\text{-}L2NR\_pre} = T_{rng} + T_{MRS\_HO\text{-}CLT} + T_{FNA} + T_F$$

$$= T_{rng} + T_{frame} + (2T_{frame} + T_{BS\text{-}AR}) + (2T_{frame} + T_{BS\text{-}AR})$$

$$= 5T_{frame} + 2T_{BS\text{-}AR} + T_{rng}$$

- In the HFMS-Pre-L2NR in reactive mode, after the MRS finishes the ranging process and SA-TEK 3way handshake, it will send the MRS_HO-CLT to the MS. Then, the MS will send the FNA[FBU] to NAR, and the NAR will exchange the FBU and FBAck with the PAR and perform the DAD procedure. Thus, the latency of the four messages equals $3T_{frame} + T_{BS\text{-}AR} + 2T_{PAR\text{-}NAR}$. In addition, the T_F equals $T_{PAR\text{-}NAR} + 2T_{frame} + T_{BS\text{-}AR}$ because the packets are forwarded from PAR to NAR, then from NAR to the MS. Hence, the SDT of the HFMS-Pre-L2NR in reactive mode can be expressed as follows.

$$SDT_{HFMS\text{-}Pre\text{-}L2NR\_re} = T_{rng} + T_{MRS\_HO\text{-}CLT} + T_{FNA[FBU]} + T_{DAD} + T_{FBU/FBAck} + T_F$$

$$= T_{rng} + T_{frame} + (2T_{frame} + T_{BS\text{-}AR}) + T_{DAD} + 2T_{PAR\text{-}NAR}$$

$$+ (T_{PAR\text{-}NAR} + 2T_{frame} + T_{BS\text{-}AR})$$

$$= 5T_{frame} + 2T_{BS\text{-}AR} + 3T_{PAR\text{-}NAR} + T_{rng} + T_{DAD}$$

The major factors contributing to the SDT are T_{L2}, and T_{DAD}. In the PMIPv6 approach, the factor *t* also needs to be taken into account. For our analysis, the T_{frame} is assumed to be 5 ms, and other parameters used are: T_{L2} = 210 ms, $T_{BS\text{-}AR}$ = 1 ms, $T_{PAR\text{-}NAR}$ = 4 ms, $T_{AR\text{-}HA}$ = 6 ms, and T_{DAD} = 1,000 ms.

Figure 4.8 shows the SDT of all schemes. It is worth noting that the SDT of MIPv6 is substantially larger than that of the HFMS and HFMS-Pre-L2NR in the predictive mode due to the considerably longer DAD process time (at least one second [47]) relative to the delay caused by other factors affecting SDT. In addition, the SDT in PMIPv6 is affected by t which can be influenced by the interval of RtrSol (4 s [48]). Increasing t would result in growing SDT in PMIPv6. The main factor contributing to the SDT of the HFMS is T_{L2} and T_{cont_resol}; however, the T_{L2} and T_{cont_resol} can be eliminated in the HFMS-Pre-L2NR.

The number of lost packets can be represented as $\lambda \times SDT$ where λ is the average packet arrival rate. Besides, the buffered packets for the HFMS and HFMS-Pre-L2NR are equal to $\lambda \times (SDT_{HFMS\_pre} + T_{BS\text{-}AR} + 4T_{frame})$ and $\lambda \times (SDT_{HFMS\text{-}Pre\text{-}L2NR\_pre} + T_{BS\text{-}AR} + 4T_{frame})$, respectively, because the PAR will forward MSs' packets to the NAR after receiving HAck. Figure 4.9 shows the number of lost packets with the traffic rate of 64 Kbps and packet size of 200 bytes (i.e, $\lambda = 40$). The MIPv6 and the PMIPv6 with $t \geqq 2$ will still experience relatively higher packet loss (more than 55 packets) due to their relatively higher SDT (more than 1,385 ms). Since the HFMS and HFMS-Pre-L2NR use a buffering mechanism, the number of lost packets is 0.

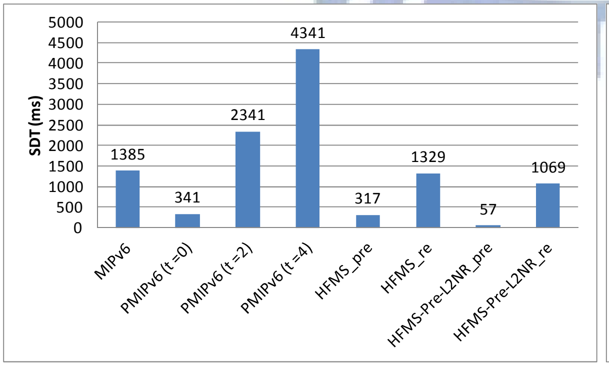

Figure 4.8: SDT of all schemes.

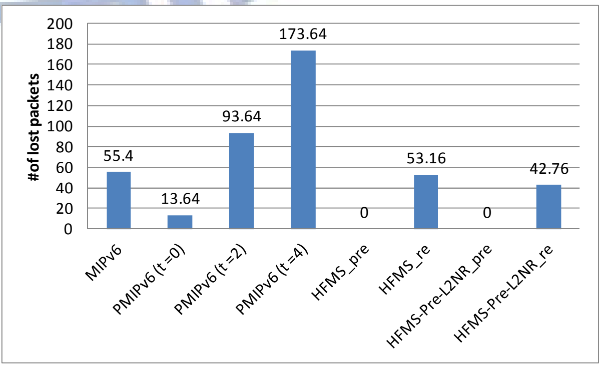

Figure 4.9: The number of lost packets in all schemes.

However, the buffered packets are 13.52 (i.e., 2704 bytes) and 3.12 (i.e., 624 bytes) for the HFMS and HFMS-Pre-L2NR, respectively, which slightly affects AR. Particularly, when the HFMS and HFMS-Pre-L2NR operate in reactive mode, few packets may be lost.

The SDT and number of lost packets in the proposed scheme are affected by the velocity of MRS (υ), the overlap distance (D_{olap}) between two BSs, and handover preparation latency (T). When a MRS moves in the overlap area, it performs the handover preparation as well as handover decision and initiation procedures. At the edge of this area, MRS has to execute the handover process. Therefore, the relation between D_{olap}, υ and T can be expressed as $D_{olap} \geqq \upsilon \times T$. If velocity of MRS exceeds the threshold (i.e., $\upsilon > D_{olap} / T$), the proposed scheme will operate in reactive mode. The handover preparation latency for HFMS can be calculated by $T = 13T_{frame} + 4T_{BS\text{-}AR} + 2T_{PAR\text{-}NAR} + T_{scan} + T_{DAD}$ (Fig. 4.4), where T_{scan} is the scanning process delay. On the other hand, the handover preparation latency for HFMS-Pre-L2NR can be calculated by $T = 9T_{frame} + 6T_{BS\text{-}AR} + 4T_{PAR\text{-}NAR} + T_{scan} + T_{DAD}$ (Fig. 4.6).

Figure 4.10 shows the SDT in terms of velocity. The T_{scan} and D_{olap} are 10 ms and 40 m, respectively. When υ is less than 132.47 km/hr, the SDT of HFMS is 317 ms. The SDT of HFMS will become 1329 ms when υ is more than 132.47 km/hr. On the other hand, the threshold of HFMS-Pre-L2NR is 133.7 km/hr. Therefore, the HFMS and HFMS-Pre-L2NR will operate in the predictive mode if the υ *is* less than 132.47 km/hr.

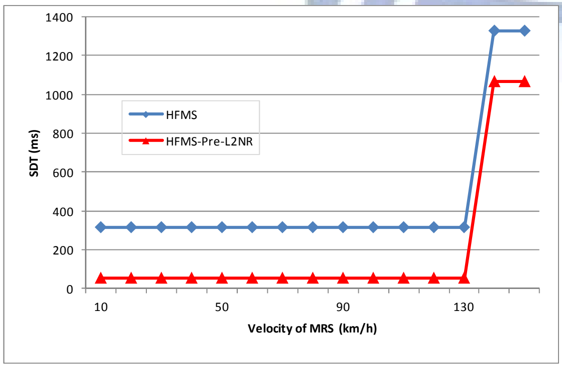

Figure 4.10: SDT in terms of velocity.

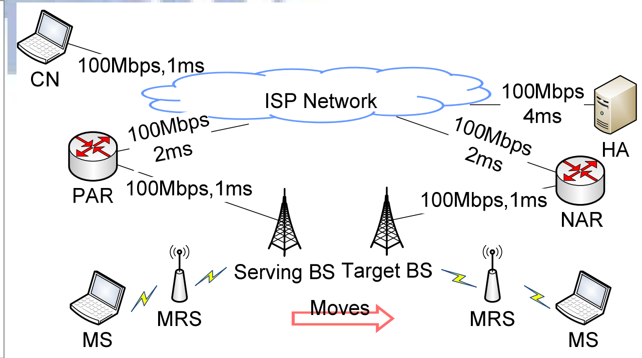

Figure 4.11: Network topology for simulation

4.5.2 Simulation results

Finally, the comparison in the performance between these three schemes is carried out using network simulator ns-2 [33, 49]. The network topology shown in Fig. 4.11 indicates that an MRS is mounted on a vehicle and moves from an SBS to a TBS in a different IP subnet. The links between routers and ISP network have 100Mbps bandwidth and 2 ms delay, and the links between BSs and ARs have 100Mbps bandwidth and 1 ms delay. The MS receives downlink traffic with the traffic rate of 64 Kbps and packet size of 200 bytes. The general parameters are listed in Table 4.1.

The simulation duration is 6 seconds. At 0th second, constant bit rate (CBR) traffic is sent from the corresponding node (CN) to the MS. The MRS starts to move at 1th second with speed of 100 km/hr or 135 km/hr. For CBR traffic, we check the packet sequence number received by the MS, and observe whether a packet is delivered successfully or not. The result of MIPv6 is shown in Fig. 4.12(a) and the results of PMIPv6 ($t = 0$, $t = 2$, and $t = 4$) are shown in Figs. 4.12 (b)-(d). The results of HFMS in predictive mode and reactive mode are shown in Figs. 4.12 (e) and (f), respectively. And the results of HFMS-Pre-L2NR in predictive mode and reactive mode are shown in Figs. 4.12 (g) and (h), respectively.

Table 4.2 illustrates the comparison in the SDT and packet loss between different schemes. In the MIPv6 approach, the SDT is 1,400 ms because the L2NR and IP layer handover procedures are performed sequentially. A higher packet loss (i.e., 55 packets) in the MIPv6 approach is observed because of no buffering mechanism and long SDT. Although the L2NR and IP layer handover procedures are also performed sequentially in PMIPv6 approach, the SDT is reduced to be 350 ms when $t = 0$ because the MS always uses the home address without DAD process. In addition, 13 packets are lost in PMIPv6 approach because there is no buffering mechanism.

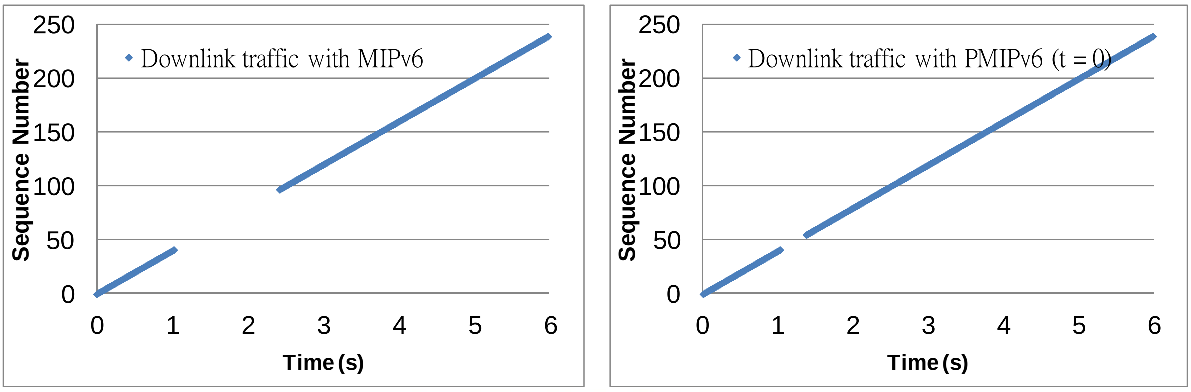

(a) MIPv6 scheme (b) PMIPv6 scheme with *t* = 0

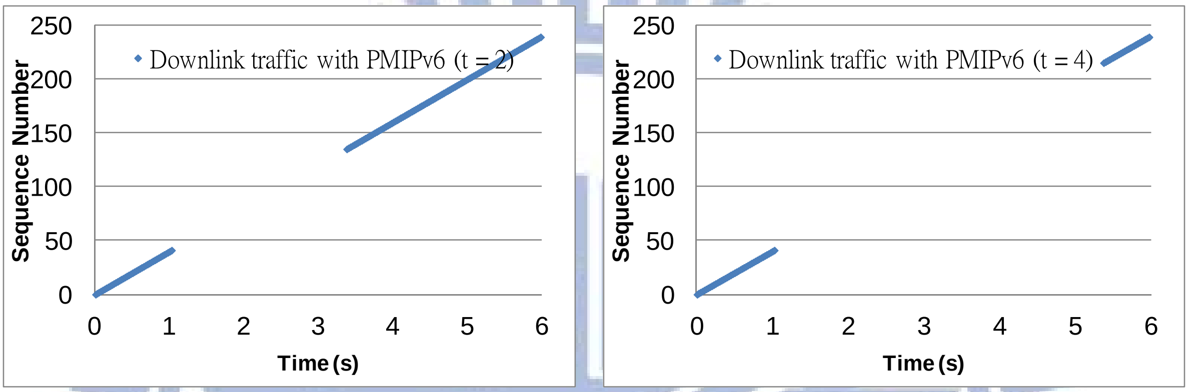

(c) PMIPv6 scheme with *t* = 2 (d) PMIPv6 scheme with *t* = 4

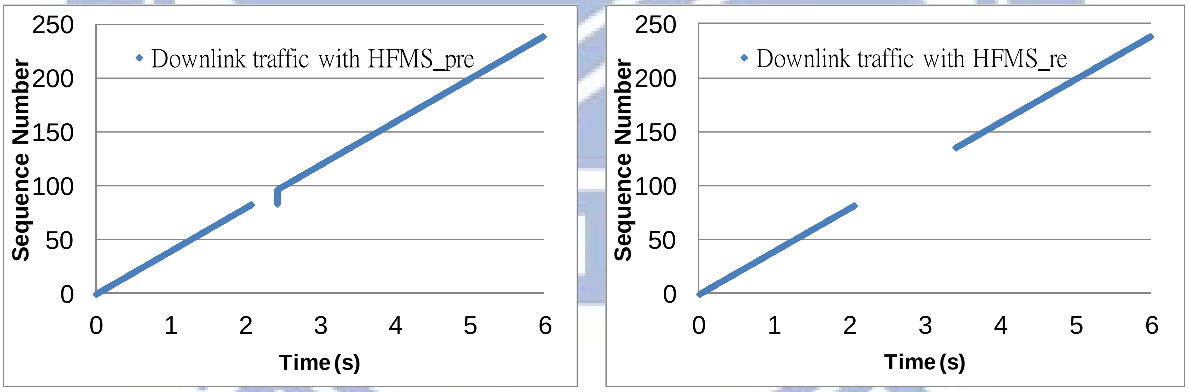

(e) HFMS in predictive mode (f) HFMS in reactive mode

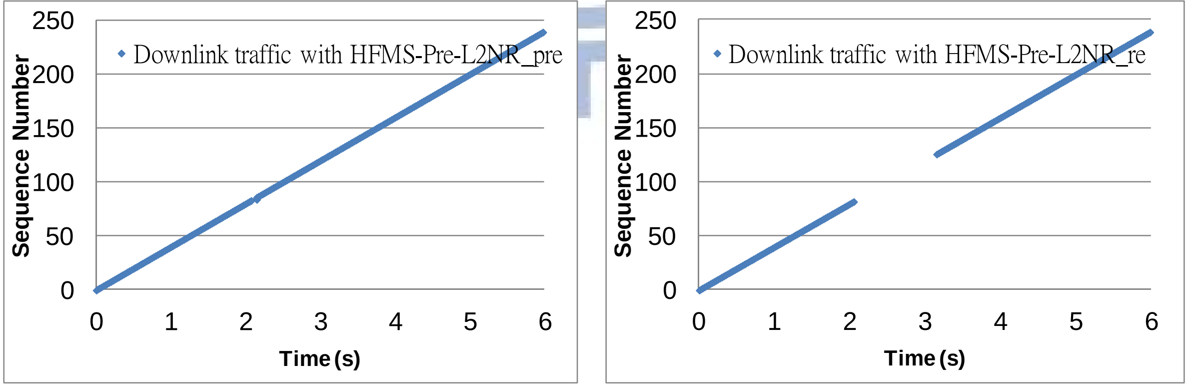

(g) HFMS-Pre-L2NR in predictive mode (h) HFMS-Pre-L2NR in reactive mode

Figure 4.12: Packet sequence number to receiving time.

The SDT in the HSMF with predictive mode is 350 ms because the cooperation of link-layer and IP layer forces the IP layer handover procedure to be carried out before the MRS switches to TBS. Moreover, packet loss does not occur in the HSMF with predictive mode because the MS's packets are forwarded to NAR and sent to MS after the NAR receives an FNA. When the HSMF operates in the reactive mode, 53 packets get lost because the bi-direction tunnel will not be established until the MS finishes the IP layer handover procedure. As compared with the MIPv6 approaches, the SDT is reduced by approximately 75% and there is no packet loss in the HSMF with predictive mode.

In the HSMF-Pre-L2NR with predictive mode, the SDT is 75 ms because the MRS only needs to perform the ranging process and SA-TEK 3way handshake. As compared with the MIPv6 approaches, the SDT is reduced by approximately 94.6%. However, when the HSMF-Pre-L2NR operates in the reactive mode, 43 packets get lost because the bi-direction tunnel will not be established until the MS finishes the IP layer handover procedure.

Table 4.2: SDT and packet loss in all schemes.

Protocol	MIPv6	PMIPv6			HSMF		HSMF-Pre-L2NR	
		t = 0	t = 2	t = 4	pre	re	pre	re
SDT (ms)	1400	350	2350	4350	350	1350	75	1100
#Lost Packets	55	13	93	173	0	53	0	43
Improvement of SDT	-	75%	-67.9%	-210.7%	75%	3.6%	94.6%	21.4%
Improvement of #Lost Packets	-	76.4%	-69.1%	-214.5%	100%	3.6%	100%	21.8%

4.6 Chapter Summary

In this Chapter, we proposed a new cross-layer scheme which allows the link-layer handover in MRS to cooperate with the IP layer handover in MS to achieve the parallel handover. In the proposed HFMS, the MRS's link-layer will notify the MS's IP layer to perform IP layer handover procedure when the MRS performs link-layer handover. The parallel handover reduces the SDT efficiently. On the other hand, the proposed buffering mechanism can avoid packet loss. We also integrate our pre-layer 2 network re-entry procedure scheme into the host-based fast mobility scheme to further reduce the SDT and packet loss. The analysis and simulation results indicate that remarkable handover performance improvement can be achieved. As a result, the seamless mobility and satisfactory QoS can be achieved for mobile users in IEEE 802.16j MRS mode.

Chapter 5

A Network-based Fast Mobility Scheme (NFMS) in 802.16j Mobile RS Mode

5.1 Problem Statements

In the previous Chapter, we can observe that when the HFMS and HFMS-Pre-L2NR operate in the reactive mode, the SDTs of them are more than 1,100 ms due to the longer DAD process, which are longer than PMIPv6 with $t = 0$. On the other hand, in [1], it has been indicated that PMIPv6 outperforms MIPv6 in the aspects of deployment, performance, and management of network service provider, and strongly expected that PMIPv6 will be a promising solution for the next generation all-IP mobile networks. In the network-based approach such as PMIPv6, the serving network manages IP mobility on behalf of the MS, and thus, it does not require the modification to the protocol stack of the MS to support IP mobility. Besides, [9, 50] proposed the cross-layer based scheme to reduce SDT and packet loss for PMIPv6. These approaches assume that the link-layer handover procedure is performed by MS, and they utilize the cooperation of MS's link-layer and new access router's (NAR's) IP layer to reduce SDT. The previous cross-layer approaches also cannot be applied in the MRS mode because the link-layer handover procedure is performed by MRS instead of MS.

Therefore, we further proposed a network-based cross-layering handover scheme (i.e., network-based fast mobility Scheme, NFMS) to solve the packet loss and longer SDT problems in the HFMS and HFMS-Pre-L2NR with the reactive mode. The NFMS allows the link-layer handover in MRS to cooperate with the IP layer handover in NAR by exchanging new management messages. On the other hand, we also integrate our pre-layer 2 network re-entry procedure (Pre-L2NR) scheme into the NFMS. The analysis and simulation results show that NFMS can obtain better performance than HFMS.

5.2 Network-based Fast Mobility Scheme (NFMS)

5.2.1 Definition of the proposed messages

In NFMS, SDT is reduced by a network based cross-layering mechanism in which the link-layer and IP layer handover procedures are performed simultaneously while packet loss can be avoided by a buffering mechanism. The NFMS enables the AR to conduct IP layer handover on behalf of all MSs under the MRS when the MRS performs link-layer handover by exchanging management messages, including MRS handover request/response (*MRS_HO-REQ/RSP*), handover request/response (*HO-REQ/RSP*), modified PBU/PBA (*MPBU/MPBA*), MRS handover complete (*MRS_HO-CLT*), and handover complete (*HO-CLT*) between the BS, AR, and MRS. The detailed definition of these proposed messages are described as follows. In addition, the NAR should possess the basic functionality of PMIPv6 in the proposed scheme.

- **MRS_HO-REQ**

Sender: MRS	Receiver: SBS	Parameter: Target BSID
When triggered: an MRS receives an MOB_BSHO-RSP and decides which BS (i.e., target BS) it wants to switch.		
Effect of receipt: The SBS will realize the target BS. After then, it sends an HO-REQ to the AR (i.e., previous AR, PAR) for notifying the PAR that MRS wants to switch from SBS to TBS.		

- **MRS_HO-RSP**

Sender: SBS	Receiver: MRS	Parameter: none
When triggered: an SBS receives an HO-RSP.		
Effect of receipt: The MRS will send an MOB_HO-IND to the SBS as a final indication of handover and perform the layer 2 network re-entry process.		

- **HO-REQ**

Sender: SBS	Receiver: PAR	Parameter: Target BSID, MRS's and MSs' MAC addresses
When triggered: an SBS receives an MRS_HO-REQ.		
Effect of receipt: The PAR will realize the target BS. After then, it finds the corresponding AR (i.e., NAR) and sends an MPBU to the NAR for initiating IP layer handover procedure on behalf of all MSs under the MRS.		

- **HO-RSP**

Sender: PAR	Receiver: SBS	Parameter: MRS's MAC addresses
When triggered: a PAR receives an MPBA.		
Effect of receipt: The SBS will send an MRS_HO-RSP to the MRS for notifying the MRS to conduct subsequent link-layer switch process.		

- **MPBU**

Sender: PAR/NAR	Receiver: PAR/NAR
Parameter: [The HAs' addresses, home network prefixes, and home addresses of all MSs, MRS's MAC address]	
When triggered: a PAR receives an HO-REQ or an NAR receives an HO-CLT.	
Effect of receipt: When NAR receives the message, it will perform IP layer handover on behalf of MSs with HAs and reply an MPBA to PAR for setting up tunnel for all MSs. In contrast, when PAR receives the message, it will reply an MPBA containing the information of HAs' addresses, home network prefixes, and home addresses of all MSs to NAR for setting up tunnel.	

- **MPBA**

Sender: PAR/NAR	Receiver: PAR/NAR
Parameter: [The HAs' addresses, home network prefixes, and home addresses of all MSs]	
When triggered: a PAR or NAR receives an MPBU.	
Effect of receipt: When PAR receives the message, it will realize the IP layer handover is in progress. After that, it forwards MSs' packets to NAR and sends an HO-RSP for notifying the SBS to conduct further handover procedure. In contrast, when NAR receives the message, it will perform IP layer handover on behalf of MSs with HAs.	

- **MRS_HO-CLT**

Sender: MRS	Receiver: TBS	Parameter: none
When triggered: an MRS finishes the layer 2 network re-entry process.		
Effect of receipt: The TBS will realize that the link-layer handover is finished. Thus, it sends an HO-CLT to NAR for notifying the NAR of the MRS's arrival.		

- **HO-CLT**

Sender: TBS	Receiver: NAR	Parameter: MRS's MAC address
When triggered: a TBS receives an MRS_HO-CLT.		
Effect of receipt: If the NAR has set up tunnel with PAR, it will forward the buffered packets to MSs. Otherwise, it will send an MPBU to PAR for initiating IP layer handover procedure on behalf of all MSs under the MRS.		

5.2.2 The NFMS handover procedures

The NFMS can be divided into predictive and reactive modes for dealing with different handover conditions as it does in the FMIPv6.

[Predictive mode]

The detailed scheme in predictive mode (Fig. 5.1) is described as follows.

1. The SBS periodically broadcasts information about neighboring BSs using

MOB_NBR-ADV message.

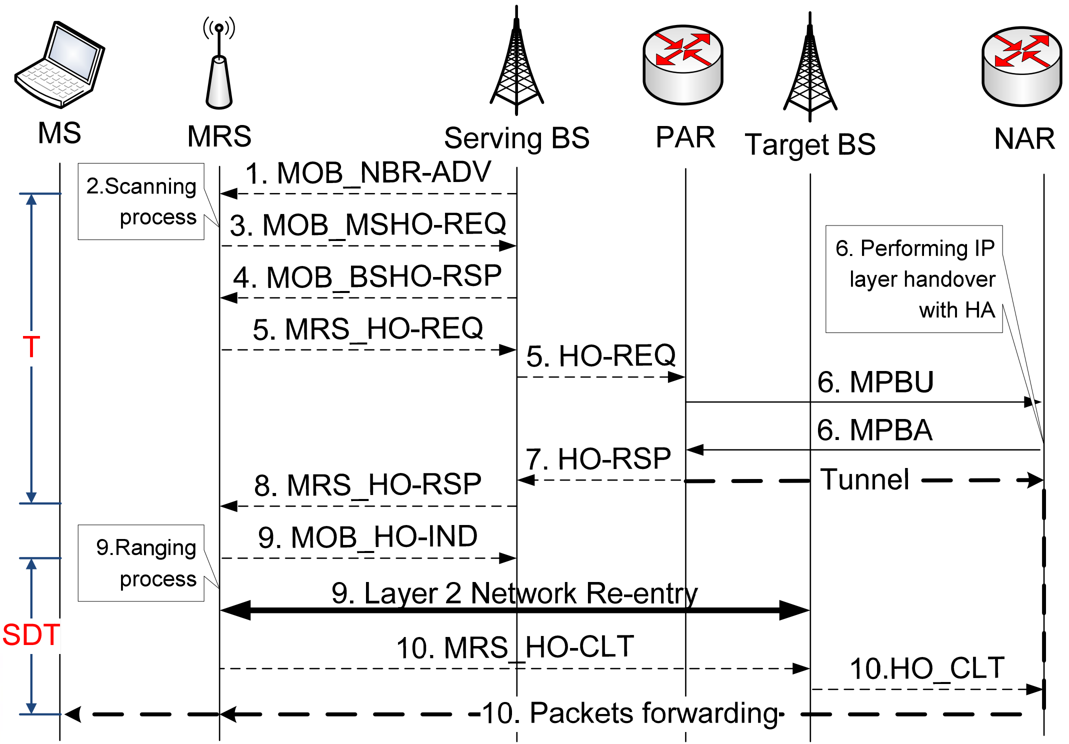

Figure 5.1: NFMS in predictive mode.

2. Upon receiving MOB_NBR-ADV, the MRS may perform a scanning process to monitor and measure the radio condition of neighbor BSs for a future handover.
3. Based on the signal strength or QoS parameters, the MRS may initiate handover by sending MOB_ MSHO-REQ.
4. Through MOB_BSHO-RSP message, the SBS can indicate one or more possible TBSs for MRS.
5. The MRS notifies the SBS that there is an impending link-layer handover to the TBS through *MRS_HO-REQ*. By means of *HO-REQ* from the SBS, the previous AR (PAR) is informed that the MRS will move to the TBS.
6. Upon receiving *HO-REQ*, the PAR finds information of all MSs under the MRS, and sets up tunnel for all MSs by exchanging *MPBU/MPBA* messages with the NAR. Afterward, the PAR copies and forwards MSs' packets to the NAR. The HAs' address, home net-

work prefixes, and home addresses of all MSs as well as MRS's MAC address will be included in *MPBU*, and the NAR will perform IP layer handover on behalf of those MSs with HAs.

7. Since IP layer handover is in progress and tunnel is established, the PAR will notify the SBS to conduct further handover procedures through *HO-RSP* message. Moreover, the NAR will buffer packets coming from PAR for MSs to avoid packet loss in the subsequent handover procedures.
8. After receiving *HO-RSP*, the SBS notifies the MRS to conduct subsequent link-layer switch process by *MRS_HO-RSP*.
9. The MRS sends MOB_HO-IND as a final indication of handover and performs the ranging process and L2NR.
10. The MRS sends *MRS_HO-CLT* to the TBS immediately after finishing the L2NR. Upon reception of *MRS_HO-CLT*, the TBS will notify the NAR of the MRS's arrival by *HO-CLT*. When the NAR receives *HO-CLT* from the TBS, it will deliver the buffered packets to all MSs.

[Reactive mode]

If the MRS moves at a high speed, the NAR may not receive *MPBU* and set up tunnel with the PAR before the MRS conducts L2NR. Therefore, the NAR will consider that IP layer handover procedure may not be finished and it will be operated in reactive mode after receiving *HO_CLT*. The detailed scheme in reactive mode (Fig. 5.2) is described as follows.

1.~ 4. The procedures are similar to those in the predictive mode.

5. Due to the fast movement of MRS, time is not enough for the PAR to acquire information to create *MPBU* message. At this point, the MRS decides to start switching to the TBS. Therefore, the MRS sends an MOB_HO-IND and terminates the connection with SBS.

6. The MRS performs the ranging process and L2NR with the TBS. There is no tunnel between PAR and NAR at this moment.
7. Once the MRS completes L2NR, it sends an *MRS_HO-CLT* message to the newly connected TBS. Then, the TBS informs the NAR that the MRS has connected to the new network by sending *HO_CLT*.
8. The NAR requests information of MSs attached to the MRS by sending *MPBU* with MRS's MAC address to PAR. IP addresses, home network prefixes and HAs' addresses of all MSs are encapsulated in *MPBA* and sent back to NAR. Upon receiving *MPBA*, the tunnel between PAR and NAR is established. At the same time, the NAR performs IP layer handover for all MSs.
9. The packets which are still sent to the PAR are forwarded to the NAR through the tunnel, and then the NAR forwards them to the MSs. After the IP layer handover is finished, the bi-directional tunnels between the NAR and the HAs are created and the packets can be directly sent to the NAR.

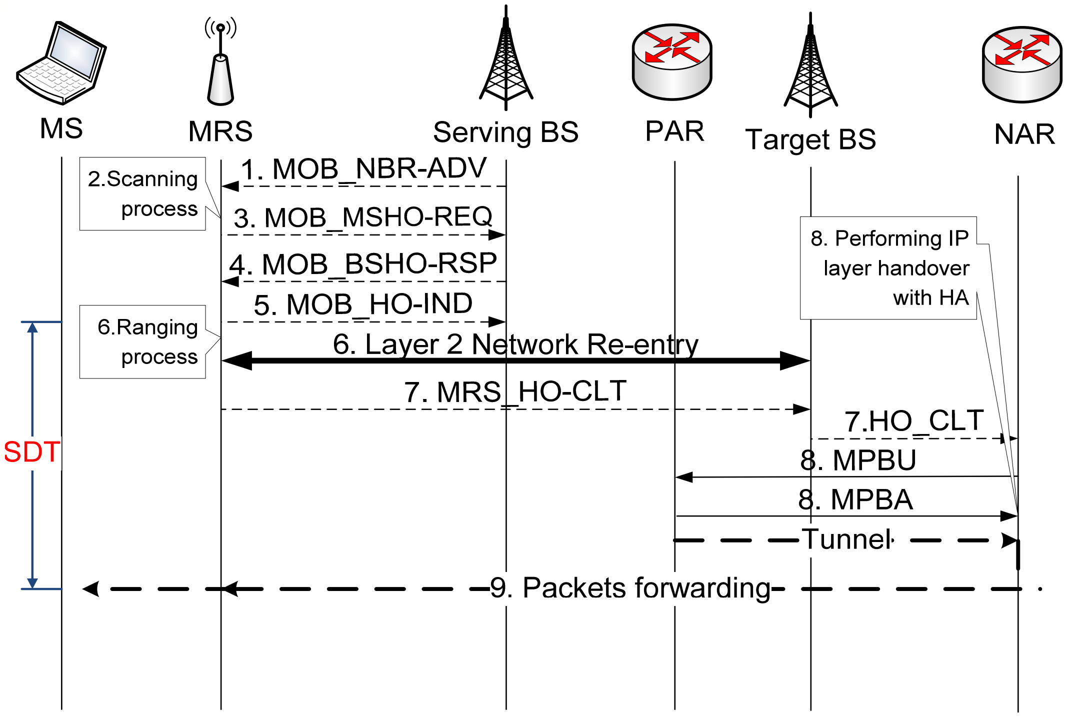

Figure 5.2: NFMS in reactive mode.

5.3 Network-based Fast Mobility Scheme with Pre-layer 2 network re-entry procedure (NFMS-Pre-L2NR)

Although the proposed NFMS allows the link-layer handover in MRS to cooperate with the IP layer handover in AR to achieve the parallel handover. The MRS still needs to perform contention-based ranging process and layer 2 network re-entry procedure. For further reducing the SDT, we add the pre-layer 2 network re-entry procedure to the NFMS.

5.3.1 Pre-layer 2 network re-entry procedure (Pre-L2NR)

The scheme of pre-layer 2 network re-entry procedure here is the same with the scheme proposed in Chapter 4. The MS under the MRS can begin to receive packet after the NAR receives the HO-CLT.

5.3.2 The NFMS-Pre-L2NR handover procedures

The NFMS-Pre-L2NR handover procedures in predictive and reactive mode are almost the same with the NFMS. It only needs additional three steps.

a. The SBS exchanges the HO-notification-REQ and HO-notification-RSP with TBS for providing the information of MRS to TBS.
b. The MRS only needs to perform the ranging process and SA-TEK 3way handshake in the NFMS-Pre-L2NR.
c. The MRS still needs to perform full authentication with the TBS.

Figure 5.3 and Figure 5.4 show the NFMS-Pre-L2NR in the predictive mode and reactive mode, respectively

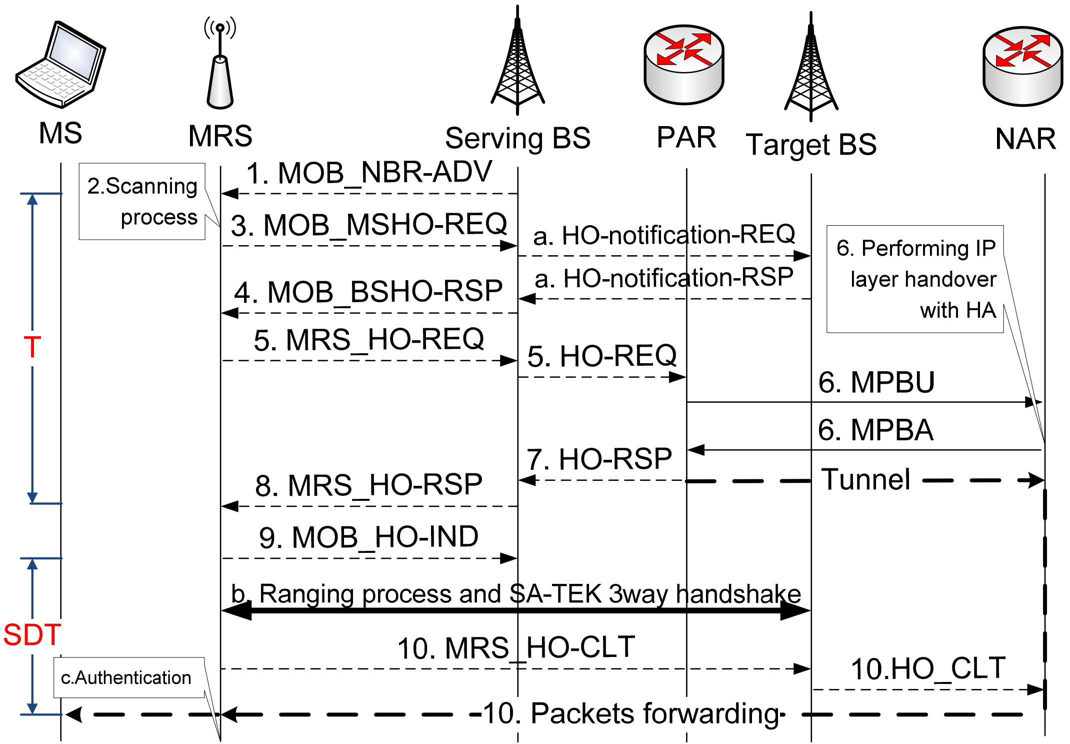

Figure 5.3: NFMS-Pre-L2NR in predictive mode.

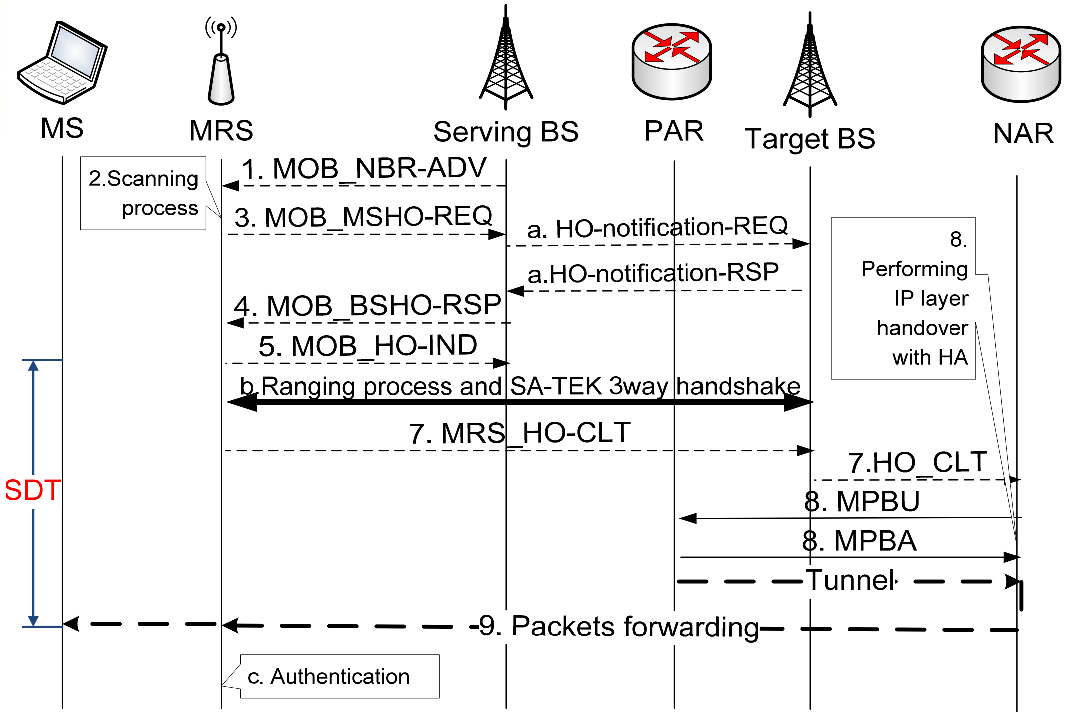

Figure 5.4: NFMS-Pre-L2NR in reactive mode.

5.4 Performance Analysis and Simulation Results

5.4.1 Performance Analysis

Parameters used in the performance analysis and simulation are listed in Table 4.1. The SDT is calculated at the MS as from the reception of the last data packet from the PAR to the reception of the first data packet from the NAR. Hence, the SDT of using NFMS and NFMS-Pre-L2NR can be calculated as follows:

- In NFMS in predictive mode, first of all, the MRS_HO-CLT is sent from MRS to TBS after the MRS completes the ranging process and L2 NR. Next, the HO-CLT message is sent from TBS to NAR. Thus, the latency of the two messages equals T_{frame} + $T_{BS\text{-}AR}$. In addition, the T_F equals $2T_{frame}$ + $T_{BS\text{-}AR}$ because the packets are forwarded from NAR to MS. Hence, the SDT of the NFMS in predictive mode can be expressed as follows.

$$
\begin{aligned}
SDT_{NFMS\_pre} &= T_{cont\_resol} + T_{rng} + T_{L2} + T_{MRS\_HO\text{-}CLT} + T_{HO\text{-}CLT} + T_F \\
&= T_{cont\_resol} + T_{rng} + T_{L2} + T_{frame} + T_{BS\text{-}AR} + (2T_{frame} + T_{BS\text{-}AR}) \\
&= 3T_{frame} + 2T_{BS\text{-}AR} + T_{cont\_resol} + T_{rng} + T_{L2}
\end{aligned}
$$

- If the reactive mode is triggered in the NFMS, the MPBU and MPBA messages are exchanged between PAR and NAR after the NAR receives an HO-CLT. Therefore, $2T_{PAR\text{-}NAR}$ should be added into the equation. In addition, the packets forwarding delay in the NFMS in reactive mode equals $T_{PAR\text{-}NAR}$ + $2T_{frame}$ + $T_{BS\text{-}AR}$ because the packets must be forwarded from the PAR to NAR. Then, the NAR deliveries the forwarded packets to the MS. As a result, the SDT of the NFMS in reactive mode can be expressed as follows.

$$
\begin{aligned}
SDT_{NFMS\_re} &= T_{cont\_resol} + T_{rng} + T_{L2} + T_{MRS\_HO\text{-}CLT} + T_{HO\text{-}CLT} + T_{MPBU/MPBA} + T_F \\
&= T_{cont\_resol} + T_{rng} + T_{L2} + T_{frame} + T_{BS\text{-}AR} + 2T_{PAR\text{-}NAR} + (T_{PAR\text{-}NAR} + 2T_{frame} + T_{BS\text{-}AR})
\end{aligned}
$$

$$= 3T_{frame} + 2T_{BS\text{-}AR} + T_{cont\_resol} + T_{rng} + T_{L2} + 3T_{PAR\text{-}NAR}$$

- In the NFMS-Pre-L2NR in predictive mode, after the MRS finishes the ranging process and SA-TEK 3way handshake, it will send the MRS_HO-CLT to the TBS. Next, the HO-CLT message is sent from TBS to NAR. Thus, the latency of the two messages equals $T_{frame} + T_{BS\text{-}AR}$. In addition, the T_F equals $2T_{frame} + T_{BS\text{-}AR}$ because the packets are forwarded from NAR to MS. Hence, the SDT of the HFMS-Pre-L2NR in predictive mode can be expressed as follows.

$$SDT_{NFMS\text{-}Pre\text{-}L2NR\_pre} = T_{rng} + T_{MRS\_HO\text{-}CLT} + T_{HO\text{-}CLT} + T_F$$

$$= T_{rng} + T_{frame} + T_{BS\text{-}AR} + (2T_{frame} + T_{BS\text{-}AR})$$

$$= 3T_{frame} + 2T_{BS\text{-}AR} + T_{rng}$$

- In the NFMS-Pre-L2NR in reactive mode, after the MRS finishes the ranging process and SA-TEK 3way handshake, it will send the MRS_HO-CLT to the TBS. Then, the TBS will send the HO-CLT to NAR, and the NAR will exchange the MPBU and MPBA with the PAR. Thus, the latency of the four messages equals $T_{frame} + T_{BS\text{-}AR} + 2T_{PAR\text{-}NAR}$. In addition, the T_F equals $T_{PAR\text{-}NAR} + 2T_{frame} + T_{BS\text{-}AR}$ because the packets are forwarded from PAR to NAR, then from NAR to the MS. Hence, the SDT of the NFMS-Pre-L2NR in reactive mode can be expressed as follows.

$$SDT_{NFMS\text{-}Pre\text{-}L2NR\_re} = T_{rng} + T_{MRS\_HO\text{-}CLT} + T_{HO\text{-}CLT} + T_{MPBU/MPBA} + T_F$$

$$= T_{rng} + T_{frame} + T_{BS\text{-}AR} + 2T_{PAR\text{-}NAR} + (T_{PAR\text{-}NAR} + 2T_{frame} + T_{BS\text{-}AR})$$

$$= 3T_{frame} + 2T_{BS\text{-}AR} + T_{rng} + 3T_{PAR\text{-}NAR}$$

Figure 5.5 shows the SDTs of NFMS, NFMS-Pre-L2NR, and the schemes discussed in Chapter 4. It is worth noting that the SDTs of NFMS and NFMS-Pre-L2NR in reactive mode is substantially reduced because these schemes does not need to perform the DAD process. The SDT in the NFMS-Pre-L2NR is small than 59 ms.

The number of lost packets can be represented as $\lambda \times SDT$ where λ is the average packet arrival rate. Besides, the buffered packets for the NFMS and NFMS-Pre-L2NR are equal to $\lambda \times (SDT_{NFMS\_pre} + T_{BS\text{-}AR} + 2T_{frame})$ and $\lambda \times (SDT_{NFMS\text{-}Pre\text{-}L2NR\_pre} + T_{BS\text{-}AR} + 2T_{frame})$, respectively, because the PAR will forward MSs' packets to the NAR after receiving MPBA.

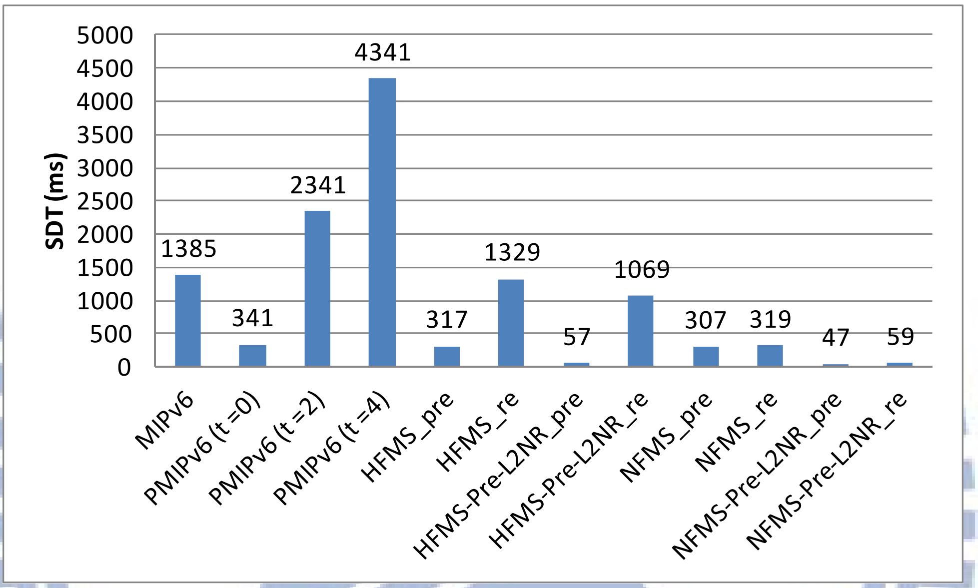

Figure 5.5: SDT of all schemes.

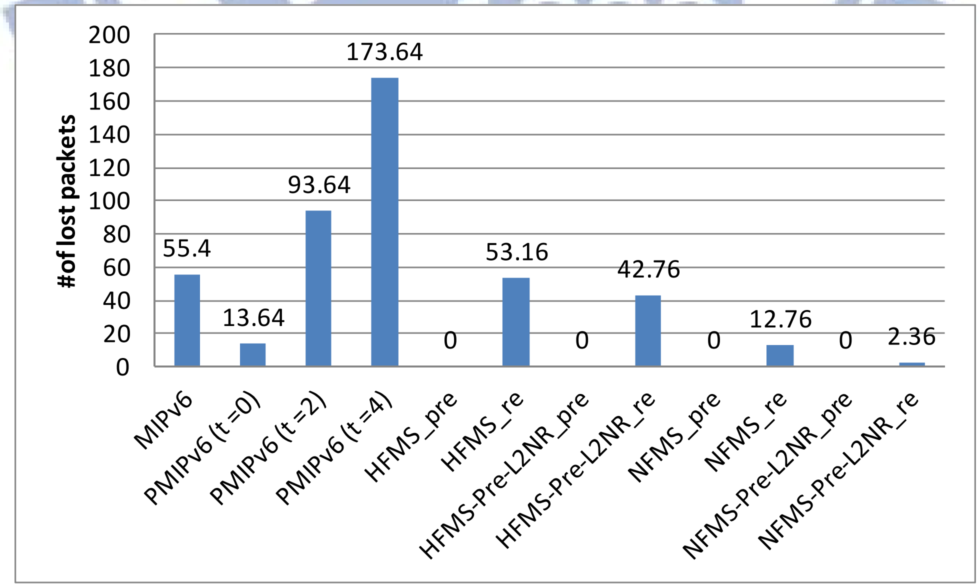

Figure 5.6: The number of lost packets in all schemes.

Figure 5.6 shows the number of lost packets with the traffic rate of 64 Kbps and packet size of 200 bytes (i.e, $\lambda = 40$). Since the NFMS and NFMS-Pre-L2NR use a buffering mechanism, the number of lost packets is 0. However, the buffered packets are 12.72 (i.e., 2544 bytes) and 2.32 (i.e., 464 bytes) for the NFMS and NFMS-Pre-L2NR, respectively, which slightly affects AR. Particularly, the number of lost packets in NFMS-Pre-L2NR with reactive mode is only 2.36, and in NFMS with reactive mode is only 12.76.

The handover preparation latency for NFMS can be calculated by $T = 5T_{frame} + 2T_{BS\text{-}AR} + 2T_{PAR\text{-}NAR} + T_{scan}$ (Fig. 5.1), where T_{scan} is the scanning process delay. On the other hand, the handover preparation latency for NFMS-Pre-L2NR can be calculated by $T = 5T_{frame} + 6T_{BS\text{-}AR} + 4T_{PAR\text{-}NAR} + T_{scan}$ (Fig. 5.3).

Figure 5.7 shows the SDT in terms of velocity. The T_{scan} and D_{olap} are 1,000 ms and 40 m, respectively. When υ is less than 139.13 km/hr, the SDT of NFMS is 307 ms. The SDT of NFMS will become 319 ms when υ is more than 139.13 km/hr. On the other hand, the threshold of NFMS-Pre-L2NR is 137.54 km/hr. It can be observed that even the NFMS and NFMS-Pre-L2NR become the reactive mode, the SDT only increases slightly.

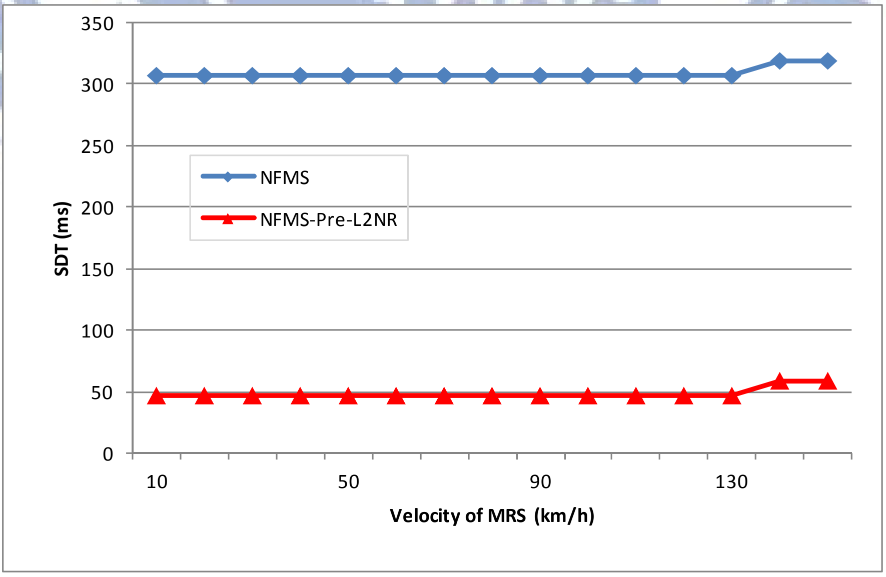

Figure 5.7: SDT in terms of velocity.

5.4.2 Simulation results

Finally, the comparison in the performance between NFMS and NFMS-Pre-L2NR is carried out using network simulator ns-2 [33, 49]. The network topology is shown in Fig. 4.11, and the general parameters are listed in Table 4.1. However, the T_{scan} equals to 1,000 ms in the simulation.

The simulation duration is 6 seconds. At 0th second, constant bit rate (CBR) traffic is sent from the corresponding node (CN) to the MS. The MRS starts to move at 1th second with speed of 100 km/hr or 140 km/hr. For CBR traffic, we check the packet sequence number received by the MS, and observe whether a packet is delivered successfully or not. The results of NFMS in predictive mode and reactive mode are shown in Fig. 5.8 (a) and (b), respectively. And the results of NFMS-Pre-L2NR in predictive mode and reactive mode are shown in Fig. 5.8 (c) and (d), respectively.

Table 5.1 illustrates the comparison in the SDT and packet loss between different schemes. The SDT in the NSMF with predictive mode is 325 ms because the cooperation of link-layer and IP layer forces the IP layer handover procedure to be carried out before the MRS switches to TBS. Moreover, packet loss does not occur in the NSMF with predictive mode because the MS's packets are forwarded to NAR and sent to MS after the NAR receives an HO_CLT. When the NSMF operates in the reactive mode, the SDT is still 325 ms, however, 12 packets get lost. As compared with the MIPv6 approaches, the SDT is reduced by approximately 76.8% and there is no packet loss in the NSMF with predictive mode.

In the NSMF-Pre-L2NR with predictive mode, the SDT is 50 ms because the MRS only needs to perform the ranging process and SA-TEK 3way handshake. As compared with the MIPv6 approaches, the SDT is reduced by approximately 96.4%. Even the NSMF-Pre-L2NR operates in the reactive mode, the SDT is only 75 ms because the network-based scheme does not need to perform the DAD process. On the other hand, the NSMF-Pre-L2NR also outperforms the PMIPv6 (with *t* = 0) when it operates in the reactive mode.

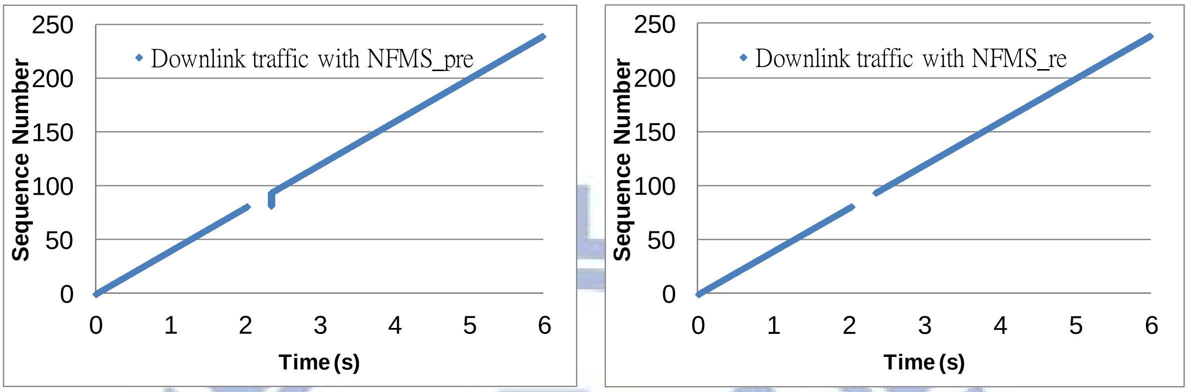

(a) NFMS in predictive mode (b) NFMS in reactive mode

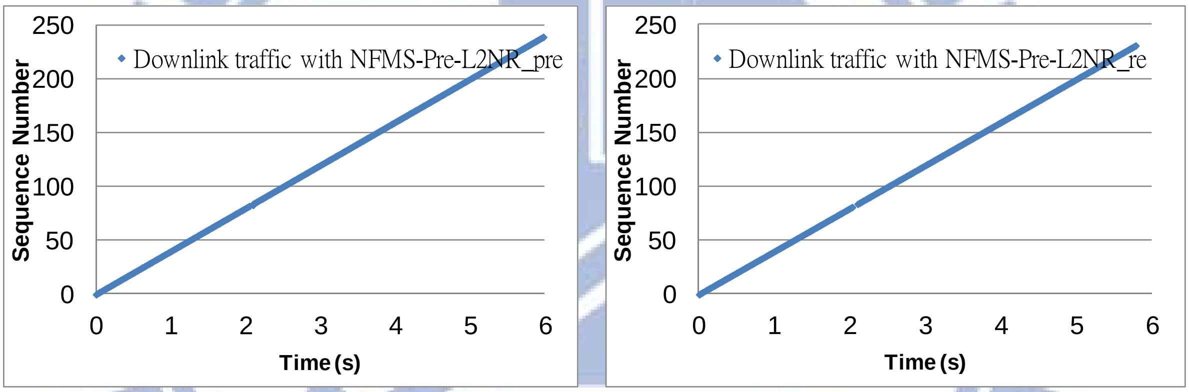

(c) NFMS-Pre-L2NR in predictive mode (d) NFMS-Pre-L2NR in reactive mode

Figure 5.8: Packet sequence number to receiving time.

Table 5.1: SDT and packet loss in all schemes.

Protocol	MIPv6	PMIPv6	HSMF		HSMF-Pre-L2NR		NSMF		NSMF-Pre-L2NR	
		t = 0	pre	re	pre	re	pre	re	pre	re
SDT (ms)	1400	350	350	1350	75	1100	325	325	50	75
#Lost Packets	55	13	0	53	0	43	0	12	0	2
Improvement of SDT	-	75%	75%	3.6%	94.6%	21.4%	76.8%	76.8%	96.4%	94.6%
Improvement of #Lost Packets	-	76.4%	100%	3.6%	100%	21.8%	100%	78.2%	100%	96.4%

5.5 Chapter Summary

In this Chapter, we proposed a network-based cross-layering handover scheme, called NFMS, to solve the packet loss and longer SDT problems in the HFMS and HFMS-Pre-L2NR with the reactive mode. We also integrate our pre-layer 2 network re-entry procedure (Pre-L2NR) scheme into the NFMS. From the simulation results, we can observe that the SDT and the number of loss packet in NFMS-Pre-L2NR can be reduced substantially.

Chapter 6

Conclusions and Future Work

Providing a satisfactory QoS for mobile users is a critical issue in the WiMAX network. However, the handover procedure in WiMAX network causes a long SDT and packet loss, leading to service termination and an unacceptable QoS. Therefore, minimizing SDT is necessary in supporting seamless mobility and satisfactory QoS for mobile users. In this dissertation, three enhanced mechanisms are proposed to improve the SDT and packet loss problems in WiMAX network. We now conclude the dissertation by summarizing our contributions and briefly discussing the future work.

6.1 Summary of Contributions

In this dissertation, we proposed three enhanced mechanisms to reduce the SDT and packet loss in the IEEE 802.16e and the IEEE 802.16j MRS mode.

- **Fast handover scheme for IEEE 802.16e:** The first proposed scheme described in Chapter 3 aims at IEEE 802.16e. The proposed cross-layer IPv6 fast handover scheme which features integrated layer 2/layer 3 messages and pre-layer 2 network re-entry procedure (Pre-L2NR). It can reduce the SDT and the numbers of control messages during handover. In the proposed scheme, the MS will negotiate with the BS to perform the layer 2 network re-entry procedure in advance. The Pre-L2NR includes acquirement of dedicated ranging time slot, temporary authentication mechanism, and pre-service flow construction. Therefore, the MS can resume receiving/sending packets after it completes the ranging procedure, leading to the reduced SDT.

- **HFMS:** The second proposed scheme is for IEEE 802.16j MRS mode. It is a host-based mobility approach. It utilizes the cooperation between the MRS's link-layer and MS's IP layer to achieve the parallel handover. The MRS's link-layer will notify the MS's IP layer to perform IP layer handover procedure when the MRS performs link-layer handover. The parallel handover reduces the SDT efficiently. On the other hand, the proposed buffering mechanism can avoid packet loss during handover. We also integrated the first mechanism into the second mechanism to further reduce the SDT.
- **NFMS:** The third proposed scheme also aims at IEEE 802.16j MRS mode. A network-based mobility approach is presented to improve the SDT and packet loss in the MRS mode. Through the cooperation between the MRS's link-layer and AR's IP layer, the parallel handover can be achieved, and the MS needs not participate in the IP layer handover procedure. The proposed network-based mobility approach can reduce the time for considerably longer duplicate address detection (DAD) process in the host-based mobility approach. The third proposed scheme further reduces SDT by Pre-L2NR.

6.2 Future Work

This study only focuses on the mobility in the WiMAX network. As moving toward next generation wireless networks, we are facing the integration of heterogeneous access networks. The main challenge is to provide mobile users moving freely across different radio access technologies with satisfactory QoS for a variety of applications. Consequently, the seamless roaming over heterogeneous networks is an important concern . Therefore, one research direction is to extend the concept of the proposed approach to a heterogeneous network.

Bibliography

[1] K.-S. Kong, Y.-H. Han, M.-K. Shin, H. R. Yoo, and W. Lee, "Mobility Management for All-IP Mobile Networks: Mobile IPv6 vs. Proxy Mobile IPv6," *IEEE Wireless Communications*, April 2008.

[2] C. Perkins (Ed.), "IP Mobility Support for IPv4," *IETF RFC 3344*, August 2002.

[3] D. Johnson, C. Perkins, and J. Arkko, "Mobility support in IPv6," *IETF RFC 3775*, June 2004.

[4] Koodli R (ed.), "Mobile IPv6 Fast handovers," *IETF RFC 5568*, July 2009.

[5] H. Jang, J. Jee, Y. Han, S. Park, J. Cha, "Mobile IPv6 Fast Handovers over IEEE 802.16e Networks," *IETF RFC 5270*, June 2008.

[6] S. Gundavelli, K. Leung, V. Devarapalli, K. Chowdhury, and B. Patil, "Proxy Mobile IPv6," *IETF RFC 5213*, August 2008.

[7] F. Xia, and B. Sarikaya, "Mobile Node Agnostic Fast Handovers for Proxy Mobile IPv6," *Internet-Draft, draft-xia-netlmm-fmip-mnagno-01.txt*, July 2007.

[8] S. Park, J. E. Lee, J. Choi, and Y. Kim, "Fast Localized Proxy Mobile IPv6 (FLPMIPv6)", *Internet-Draft, draft-parknetlmm-fastpmip-00.txt*, Feb. 2007.

[9] H. Yokota, K. Chowdhury, R. Koodli, B. Patil, and F. Xia, "Fast Handovers for Proxy Mobile IPv6," *IETF RFC 5949*, Sep. 2010.

[10] A. Dutta, F. Vakil, J.-C. Chen, M. Tauil, S. Baba, N. Nakajima, and H. Schulzrinne, "Application Layer Mobility Management Scheme for Wireless Internet," *Proceedings of IEEE Int'l Conf. Third Generation Wireless and Beyond*, pp. 379-385, May 2001.

[11] J.-C. Chen and T. Zhang, *IP-Based Next-Generation Wireless Networks. Wiley*, http://www.cs.nthu.edu.tw/~jcchen/book.html, Jan. 2004.

[12] R. Moskowitz, P. Nikander, P. Jokela, and T. Henderson, "Host Identity Protocol," *IETF RFC 5201*, April 2008.

[13] P. Nikander, T. Henderson, C. Vogt, and J. Arkko, "End-Host Mobility and Multihoming with the Host Identity Protocol," *IETF RFC 5206*, April 2008.

[14] A. Campbell, J. Gomez, S. Kim, A.G. Valko , C.-Y. Wang, and Z.R. Turanyi, "Design, Implementation and Evaluation of Cellular IP," *IEEE Personal Comm. Magazine*, Aug. 2000.

[15] H. Soliman, C. Castelluccia, K. Elmalki, and L. Bellier, “Hierarchical Mobile IPv6 (HMIPv6) Mobility Management,” *IETF RFC 5380*, Oct. 2008.

[16] R. Ramjee, K. Varadhan, L. Salgarelli, S.R. Thuel, S.-Y. Wang, and T.L. Porta, “HAWAII: A Domain-Based Approach for Supporting Mobility in Wide-Area Wireless Networks,” *IEEE/ACM Trans. Networking*, vol. 10, no. 3, pp. 396-410, June 2002.

[17] J. H. Yeh, et.al., “Fast Intra-Network and Cross-Layer Handover (FINCH) for WiMAX and Mobile Internet,” *IEEE Transactions on Mobile Computing*, vol. 8, no. 4, pp.558-574, April 2009.

[18] IEEE Std. 802.16-2004, “Local and Metropolitan Area Networks, Part 16: Air Interface for Fixed Broadband Wireless Access Systems,” Oct. 2004.

[19] IEEE Std. 802.16e-2005, “Local and Metropolitan Area Networks, Part 16: Air Interface for Fixed and Mobile Broadband Wireless Access Systems,” Dec. 2005.

[20] IEEE Std. 802.16j, “Local and Metropolitan Area Networks, Part 16: Air Interface for Fixed Broadband Wireless Access Systems, Multihop Relay Specification,” June 2009.

[21] V. Genc et al., “IEEE 802.16j relay-based wireless access networks: an overview,” *IEEE Wireless Communications*, vol. 15, no. 4, pp.56-63, 2008.

[22] D. Soldani and S. Dixit, “Wireless relays for broadband access,” *IEEE Communications Magazine*, vol. 45, no.3, pp.58-66, 2008.

[23] S. Thomson and T. Narten, “IPv6 stateless address auto-configuration,” *IETF RFC 2462*, December 1998.

[24] D.H. Lee, K. Kyamakya, and J. P. Umindi, “Fast Handover Algorithm for IEEE 802.16e Broadband Wireless Access System,” *Proceedings of 2006 1st International Symposium on Wireless Pervasive Computing*, Jan. 2006.

[25] L. S. Lee and K. Wang, “A Network Assisted Fast Handover Scheme for IEEE 802.16e Networks,” *Proceedings of IEEE 18th International Symposium on Personal, Indoor and Mobile Radio Communications 2007*, Athens, Greece, Sept. 2007.

[26] Y. H. Han et al., “A Cross-Layering Design for IPv6 Fast Handover Support in an IEEE 802.16e Wireless MAN,” *IEEE Network*, vol. 21, no. 6, Nov.-Dec. 2007, pp. 54-62.

[27] L. Chen et al., “A Cross-Layer Fast Handover Scheme for Mobile WiMAX,” *Proceedings of IEEE Vehicular Technology Conference 2007*, Baltimore, MD, USA, Sept.-Oct. 2007, pp.1578-1582.

[28] Y. W. Chen and F. Y. Hsieh, “A Cross Layer Design for Handoff in 802.16e Network with IPv6 Mobility,” *Proceedings of IEEE Wireless Communications and Networking Conference 2007*, Kowloon, Mar. 2007, pp.3844-3849.

[29] C. K. Chang and C. T. Huang, "Fast and Secure Mobility for IEEE 802.16e Broadband Wireless Networks," *Proceedings of International Conference on Parallel Processing Workshops 2007*, Xian, China, Sept. 2007, pp.46-46.

[30] B. Aboba, L. Blunk, J. Volbrecht, J. Carlson, and H. Levkowetz, "Extensible Authentication Protocol," *IETF RFC3748*, June 2004.

[31] R. Koodli, Ed., "Fast Handovers for Mobile IPv6," IETF RFC 4068, July 2005.

[32] G.-H. Hwang , T. Kwon, A.-R. Lim, and D.-H. Cho, "Fast handover scheme for real-time downlink services in IEEE 802.16e BWA system," *Proceeding of Vehicular Technology Conference 2005*, pp.2028-2032, June 2005.

[33] The Network Simulator - ns-2, http://www.isi.edu/nsnam/ns/

[34] Seamless and Secure Handover, http://www.antd.nist.gov /seamlessandsecure/

[35] C.-H. Shih and Y.-C. Chen, "A FMIPv6 Based Handover Scheme for Real-Time Applications in Mobile WiMAX," *Journal of Networks*, vol. 5, no. 8, pp.929-936, 2010.

[36] H. Yang, H. Lee, and M. Lee, "A Mobility Management Protocol for Multi-hop Relay Networks," *Proceeding of International Conference on Advanced Communication Technology 2008*, pp.37-41, Feb. 2008.

[37] C.-C. Kao, W.-C. Kan, and T.-C. Shih, "Handoff Minimization Through a Relay Station Grouping Algorithm With Efficient Radio-Resource Scheduling Policies for IEEE 802.16j Multihop Relay Networks," *IEEE Transactions on Vehicular Technology*, vol. 59, no. 5, pp.2185-2197, 2010.

[38] B.-J. Chang, S.-J. Hsieh, and D.-Y. Wang, "Analytical Model of QoS-Based Fast Seamless Handoff in IEEE 802.16j WiMAX Networks," *IEEE Transactions on Vehicular Technology*, vol. 59, no. 7, pp. 3549-3561, 2010.

[39] W. Ying, Z. Weiliang, and Y. Xiaohu, "A Fast Handover Scheme in IEEE802.16 Relay Networks," *Proceeding of Second International Conference on Future Networks*, pp.243-247, Jan. 2010.

[40] N. C. Doyle and K. E. Tepe, "IP mobility scheme for multi-hop WiMAX," *Proceeding of IEEE International Conference on Electro/Information Technology*, pp.266-270, June. 2009.

[41] IEEE Std. 802.16m-2011, "Local and Metropolitan Area Networks, Part 16: Air Interface for Broadband Wireless Access Systems Amendment 3: Advanced Air Interface," May 2011.

[42] 3GPP TS 36.300, "Evolved Universal Terrestrial Radio Access (E-UTRA) and Evolved Universal Terrestrial Radio Access Network (E-UTRAN); Overall Description."

[43] R. Balakrishnan, X. Yang, M. Venkatachalam, and I. F. Akyildiz, “Mobile relay and group mobility for 4G WiMAX networks,” *Proceeding of IEEE Wireless Communications and Networking Conference*, pp.1224-1229, March 2011.

[44] V. Devarapalli, R. Wakikawa, A. Petrescu, and P. Thubert, “Network Mobility (NEMO) Basic Support Protocol,” *IETF RFC 3963*, Jan 2005.

[45] S. Gundavelli, G. Keeni, K. Koide, and K. Nagami, “Network Mobility (NEMO) Management Information Base,” *IETF RFC 5488*, April 2009.

[46] F. P. Tso, L. Cui. L. Zhang, W. Jia, D. Yao, J. Teng, and D. Xuan, “DragonNet: A Robust Mobile Internet Service System for Long Distance Trans,” *Proceeding of IEEE INFOCOM 2011*, Shanghai China, 2011.

[47] N. Montavont and T. Noel, “Handover management for mobile nodes in IPv6 networks,” *IEEE Communications Magazine*, vol. 40, no. 8, pp.38-43, 2002.

[48] T. Narten, E. Nordmark, and W. Simpson, “Neighbor Discovery for IP Version 6 (IPv6),” *IETF RFC 2461*, Dec. 1998.

[49] Light WiMAX Simulator; http://sites.google.com/site/lwxns2/

[50] S. Sim, S.-J. Han, J.-S. Park, and S.-C. Lee, “Seamless IP mobility support for flat architecture mobile WiMAX networks,” *IEEE Commun. Mag.*, June 2009.

Curriculum Vitae

Chen-Hua Shih was born in Taipei, Taiwan, R.O.C., in 1981. He received his B.S. degree in Computer Science and Information Engineering from National Central University, Jhongli City, Taiwan, in 2004. He is currently pursuing the Ph.D. degree in Computer Science in National Chiao Tung University, Hsinchu City, Taiwan. His research interests include QoS, mobile IP, wireless networks, P2P, and network protocols.

Publication List

- Journal Paper:

1. Chen-Hua Shih and Yaw-Chung Chen, “A FMIPv6 Based Handover Scheme for Real-Time Applications in Mobile WiMAX,” *Journal of Networks,* Aug. 2010, pp.929-936.
2. Chen-Hua Shih, Jun-Li Kuo, Cheng-Yuan Ho, and Yaw-Chung Chen, “Media-Independent Handover Design for Seamless Mobility in Heterogeneous WiMAX/WiFi Networks, ” *IEICE Transactions on Communications*, vol. E95-B, no. 10, Oct. 2012, pp.3168-3178.
3. Chen-Hua Shih, Jun-Li Kuo, and Yaw-Chung Chen, “A Cross-layer Design for Wireless Ad-Hoc Peer-to-Peer Live Multimedia Streaming, ” *IEICE Transactions on Communications*, vol. E95-B, no. 10, Oct. 2012, 3316-3319.
4. Jun-Li Kuo, Chen-Hua Shih, Cheng-Yuan Ho, Ming-Ching Wang, and Yaw-Chung Chen, “RING: A Cross-Layer P2P Group Conferencing Mechanism over Mobile Ad-Hoc Networks, ” *IEICE Transactions on Communications*, vol. E95-B, no. 09, Sep. 2012, pp. 2759-2768.
5. Jun-Li Kuo, Chen-Hua Shih, Cheng-Yuan Ho, and Yaw-Chung Chen, “A Cross-Layer Approach for Real-Time Multimedia Streaming on Wireless Peer-to-Peer Ad-Hoc Network, ” *Ad Hoc Networks* (ELSEVIER).
6. Chen-Hua Shih, Jun-Li Kuo, and Yaw-Chung Chen, “A Host-based Fast Mobility Scheme (HFMS) in 802.16j Mobile RS Mode,” Prepared for IEICE Transactions on Communications.
7. Chen-Hua Shih, Jun-Li Kuo, and Yaw-Chung Chen, “A Network-based Fast Mobility Scheme (NFMS) in 802.16j Mobile RS Mode,” submitted to IEICE Transactions on Information and Systems.
8. Chen-Hua Shih, Jun-Li Kuo, and Yaw-Chung Chen, “A New Energy Efficient

Peer-to-Peer IPTV Distribution Mechanism," Prepared for IEICE Transactions on Communications.

9. Jun-Li Kuo, Chen-Hua Shih, and Yaw-Chung Chen, "The live data delivery for NAT and asymmetrical network in P2PTV system," submitted to Journal of Communications and Networks (in revision).

- Conference Paper:

1. Cheng-Yuan Ho, Chen-Hua Shih, Yaw-Chung Chen, and Yi-Cheng Chan, "Aided Congestion Avoidance Mechanism for TCP Vegas," *Proceedings of Third International Conference on Computer Network and Mobile Computing 2005*, Zhanggjijie, China, August 2005, pp. 961 – 971.
2. Yuan-Chih Chang, Chen-Hua Shih, and Yaw-Chung Chen, "A Latency and Modulation Aware Scheduling Solution for IEEE 802.16 Base Stations," *Proceedings of International Computer Symposium 2008*, Nov. 2008.
3. Chen-Hua Shih, Jun-Li Kuo, Chi-Huan Huang, and Yaw-Chung Chen, "A proxy-based fast handover scheme for hierarchical mobile IPv6," *Proceedings of the 5th International Conference on Ubiquitous Information Management and Communication 2011*, Feb. 2011.
4. Jun-Li Kuo, Chen-Hua Shih, and Yaw-Chung Chen, "A comprehensive study of delivery strategies with chunk scheduling for mesh P2P live streaming," *Proceedings of the 5th International Conference on Ubiquitous Information Management and Communication 2011*, Feb. 2011.
5. Chen-Hua Shih, Wei-Yun Chang, and Yaw-Chung Chen, "A Pre-authentication Scheme on WiMAX for QoS Improvement of Mobile Services," *Proceedings of IEEE 13th International Conference on High Performance Computing and Communications 2011*, Sep. 2011, pp.745-751.