Project Drawing

Deliverable #6
June 2nd 2014

National Chiao Tung University

1001 TA HSUEH ROAD, HSINCHU, TAIWAN 30010

Phone: +886-3-5718083

www.sde.tw
facebook.com/twsde
twitter.com/NCTU_UNICODE

Solar Decathlon Europe

國立交通大學
National Chiao Tung University

NCTUNICODE

ORCHID HOUSE

1. GENERAL

GE-001	Cover Sheet	1
GE-101	Sheet List 1	2
GE-102	Sheet List 2	3
GE-103	Sheet List 3	4
GE-201	General Symbols	5
GE-211	General Abbreviations	6
GE-301	Urban Project Location	7
GE-310	Urban Proposal Explanation 1	8
GE-311	Urban Proposal Explanation 2	9
GE-320	Existing Building Drawings and Analysis	10
GE-330	Competition Dwelling	11
GE-401	Pavilion East Side Rendering	12
GE-402	Pavilion West Side Rendering	13

2. ARCHITECTURAL

AR-001	La Cité du Soleil® Plan	14
AR-002	Site Plan	15
AR-011	Solar Envelope	16
AR-014	Architecture Footprint	17
AR-017	Measurable Area	18
AR-021	Ground Level Plan	19
AR-022	Mezzanine Level Plan	20
AR-031	Roof Level Plan	21
AR-041	Reconfigurable Feature 1	22
AR-042	Reconfigurable Feature 2	23
AR-043	Reconfigurable Feature 3	24
AR-044	Reconfigurable Feature 4	25
AR-051	Site Entrance and Exit	26
AR-101	Site Elevation	27
AR-111	East Elevation	28
AR-112	North Elevation	29
AR-113	South Elevation	30
AR-114	West Elevation	31
AR-201	Longitudinal Section 1	32
AR-202	Longitudinal Section 2	33
AR-203	Longitudinal Section 3	34
AR-211	Transversal Section 1	35
AR-212	Transversal Section 2	36
AR-213	Transversal Section 3	37
AR-301	Window Schedule and Details 1	38
AR-302	Window Schedule and Details 2	39
AR-303	Window Schedule and Details 3	40
AR-304	Window Schedule and Details 4	41
AR-305	Window Schedule and Details 5	42
AR-306	Window Schedule and Details 6	43
AR-307	Window Schedule and Details 7	44
AR-308	Window Schedule and Details 8	45
AR-309	Window Schedule and Details 9	46
AR-311	Door Schedule and Details 1	47
AR-312	Door Schedule and Details 2	48
AR-321	Floor Construction Ground Level	49
AR-322	Floor Construction Mezzanine Level	50
AR-323	Floor Construction Details Ground Level 1	51
AR-324	Floor Construction Details Ground Level 2	52
AR-325	Floor Construction Details Ground Level 3	53
AR-326	Floor Construction Details Ground Level 4	54
AR-327	Floor Construction Details Ground Level 5	55
AR-328	Floor Construction Details Mezzanine Level 1	56
AR-329	Floor Construction Details Mezzanine Level 2	57
AR-330	Floor Construction Details Mezzanine Level 3	58
AR-331	Floor Construction Details Mezzanine Level 4	59
AR-332	Ceiling Construction Details Mezzanine Level 1	60
AR-333	Ceiling Construction Details Mezzanine Level 2	61
AR-334	Ceiling Construction Details Mezzanine Level 3	62
AR-336	Roof Construction Details	63
AR-341	Wall Sections and Construction Details 1	64
AR-351	Partitions Details	65
AR-361	Joints Details 1	66
AR-362	Joints Details 2	67
AR-363	Joints Details 3	68
AR-364	Joints Details 4	69
AR-371	Stair Details 1	70
AR-372	Stair Details 2	71
AR-401	Green Core Details 1	72
AR-402	Green Core Details 2	73
AR-403	Green Core Details 3	74
AR-404	Green Core Details 4	75
AR-411	Blue Wall Details	76
AR-421	Smart Skin Details 1	77
AR-422	Smart Skin Details 2	78
AR-431	Thermal Wall Details 1	79
AR-432	Thermal Wall Details 2	80
AR-433	Thermal Wall Details 3	81
AR-434	Thermal Wall Details 4	82
AR-435	Thermal Wall Details 5	83
AR-436	Thermal Wall Details 6	84
AR-437	Thermal Wall Details 7	85
AR-438	Thermal Wall Details 8	86
AR-439	Thermal Wall Details 9	87
AR-440	Thermal Wall Details 10	88
AR-441	Thermal Wall Details 11	89

3. BIOCLIMATIC ANALYSIS (BA)

BA-001	Taipei Climate Analysis	90
BA-002	Taipei Shading Analysis	91
BA-003	Taipei Wind Rose Analysis	92
BA-004	Versailles Climate Analysis	93
BA-005	Versailles Shading Analysis	94
BA-006	Versailles Wind Rose Analysis	95
BA-011	Bioclimatic Strategies	96
BA-012	Natural Ventilation	97
BA-013	Solar Chemny	98
BA-014	Earth/Vegetation cooling	99
BA-015	Evaporative Cooling	100
BA-016	Direct Solar Heating	101
BA-017	Bioclimatic Drawings Heating	102
BA-018	Thermal Wall in Versailles	103
BA-019	Thermal Wall in Taipei	104
BA-020	Heat Exchanger Preheated by Solar Hot Water	105
BA-021	Heat Pump	106

4. INTERIORS (IN)

IN-001	Ground Level Floor	107
IN-002	Mezzanine Level Floor	108
IN-101	Reflected Ceiling	109
IN-201	Interior Elevation 1	110
IN-202	Interior Elevation 2	111
IN-203	Interior Elevation 3	112
IN-204	Interior Elevation 4	112
IN-205	Interior Elevation 5	114
IN-211	Interior Elevation 6	115
IN-212	Interior Elevation 7	116
IN-301	Ground Level Furnishings	117
IN-302	Mezzanine Level Furnishings	118
IN-401	Kitchen Plan 1	119
IN-402	Kitchen Plan 2	120
IN-411	Kitchen Elevations	121
IN-421	Kitchen Section 1	122
IN-422	Kitchen Section 2	123
IN-423	Kitchen Section 3	124
IN-501	Bathroom Plan	125
IN-511	Bathroom Elevations	126

Solar Decathlon Europe

Project: ORCHID HOUSE

Institution: 國立交通大學 National Chiao Tung University

NCTU Architecture 國立交通大學建築研究所

Team Name: NCTU/UNICODE

Address: 1001 Ta-Hsueh Road
Hsinchu City 30010
Taiwan

Contact: www.sde.tw

Consultants:

Note:

Mark	Date	Description
DN	2013/04/01	SD Submission
DN	2013/07/01	DDc Submission
ST	2013/11/01	DD Submission
ST	2014/03/03	CD Submission
ST	2014/04/30	CD Submission
ST	2014/06/02	CD Submission

Drawn by: ST

Checked by: -

Scale: -

Unit: -

DWG. Title: SHEET LIST 1

DWG. No.: GE-101

PAGE: 2

IN-601	Interior Rendering Entrance	127
IN-602	Interior Rendering Living Room	128
IN-603	Interior Rendering 2nd Floor	129
IN-604	Interior Rendering View From Terrace	130
IN-701	Workstation Plan	131
IN-711	Workstation Elevations	132
IN-721	Workstation Sections	133

5. STRUCTURAL (ST)

ST-001	Foundation Plan and Details	134
ST-002	Structural Floor Unit	135
ST-011	Structural Ground Level Plan	136
ST-012	Structural Mezzanine Level Plan	137
ST-013	Structural Elements Marking Ground Level Plan	138
ST-014	Structural Elements Marking Mezzanine Level Plan	139
ST-021	Structural Roof Plan	140
ST-022	Structural Roof Units	141
ST-023	Structural Elements Marking Roof Plan	142
ST-101	Structural Longitudinal Sections Frame 1	143
ST-102	Structural Longitudinal Sections Frame 2	144
ST-103	Structural Longitudinal Sections Frame 3	145
ST-104	Structural Longitudinal Sections Frame 4	146
ST-111	Structural Transversal Sections Frame A	147
ST-112	Structural Transversal Sections Frame A-3	148
ST-113	Structural Transversal Sections Frame A-4	149
ST-114	Structural Transversal Sections Frame B	150
ST-115	Structural Transversal Sections Frame B-1	151
ST-116	Structural Transversal Sections Frame C	152
ST-117	Structural Transversal Sections Frame C-1	153
ST-118	Structural Transversal Sections Frame D	154
ST-201	Structural Blow ups	155
ST-301	Structural Details	156
ST-302	Structural Details Axon	157
ST-401	Structural Axon	158

6. FIRE PROTECTION (FP)

FP-001	Fire Protection Details	159
FP-002	Fire Protection : Ground Level	160
FP-003	Fire Protection : Mezzanine Level	161
FP-004	Fire Protection Evacuation Path : Ground Level	162
FP-005	Fire Protection Evacuation Path : Mezzanine Level	163

7. PLUMBING (PL)

PL-001	Plumbing Supply and Removal Ground Level Plan.	164
PL-002	Plumbing Supply and Removal Ground Mezzanine Plan.	165
PL-011	Gray Water Ground Level	166
PL-012	Gray Water Mezzanine Level	167
PL-021	Drain / Waste / Vent	168
PL-031	Containers and Fill Locations	169
PL-101	Schematic diagram in Taiwan	170
PL-102	Schematic diagram in Competition	171
PL-201	Supply and removal Clean Water Isometric	172
PL-202	Supply and removal Hot Water Isometric	173
PL-211	Grey water Isometric	174
PL-221	Drain/Waste/Vent Isometric	175
PL-301	Green Core Irrigation Plan	176
PL-302	Green Core Irrigation Elevation 1	177
PL-303	Green Core Irrigation Elevation 2	178

8. SOLAR WATER HEATING (SW)

SW-001	Solar Water Plan	179
SW-101	Solar Water Isometric	180
SW-201	Solar Water Schematic	181

9. MECHANICAL (ME)

ME-001	HVAC Distribution Plan Ground Level	182
ME-002	HVAC Distribution Plan Mezzanine Level	183
ME-011	HVAC equipment 1	184
ME-012	HVAC equipment 2	185
ME-021	Heating	186
ME-031	Cooling	187
ME-041	Ventilation 1	188
ME-042	Ventilation 2	189
ME-101	Mechanical room elevations	190
ME-201	HVAC System Schematic drawings	191
ME-211	Heating mode Schematic drawings 1	192
ME-212	Heating mode Schematic drawings 2	193
ME-221	Cooling mode Schematic drawings 1	194
ME-222	Cooling mode Schematic drawings 2	195
ME-231	Controls 1	196
ME-232	Controls 2	197
ME-301	Isometric Distribution 1	198
ME-302	Isometric Distribution 2	199

10. ELECTRICAL (EL)

EL-001	Grid interconnection	200
EL-201	DC wiring diagram	201
EL-301	Power Plan Ground Level	202
EL-302	Power Plan Mezzanine Level	203
EL-401	Lighting Plan Site	204
EL-402	Lighting Plan Ground Level	205
EL-403	Lighting Plan Mezzanine Level	206
EL-501	One-line Diagram 1	207
EL-502	One-line Diagram 2	208
EL-503	One-line Diagram 3	209
EL-601	AC Circuit layout	210
EL-602	AC Circuit layout	211
EL-603	AC Circuit layout	212

11. PHOTOVOLTAIC SYSTEM (PV)

PV-001	Photovoltaic System: General 1	213
PV-002	Photovoltaic System: General 2	214
PV-003	Photovoltaic System: General 3	215
PV-011	Photovoltaic System: DC circuits	216
PV-021	Photovoltaic System: AC citcuits	217
PV-031	Photovoltaic System: grounding system	218
PV-041	Photovoltaic System: Module Layout	219
PV-042	Photovoltaic System: Module String Layout	220

12. TELECOMMUNICATIONS AND BUILDING AUTOMATIZATION SYSTEM (BAS)

BAS-001	Wiring Plan Ground Level	221
BAS-002	Wiring Plan Mezzanine Level	222
BAS-101	Schematic diagram 1	223
BAS-102	Schematic diagram 2	224
BAS-201	Equipment 1	225
BAS-202	Equipment 2	226

13. SDE INSTRUMENTATION DRAWINGS (ID)

ID-001-1	General Monitoring Ground Level	227
ID-001-2	General Monitoring Mezzanine Level	228
ID-002	Monitoring Panel Room	229
ID-003-1	Electricity Meters Topology 1	230
ID-003-2	Electricity Meters Topology 2	231
ID-004	Electricity Meters Connection	232
ID-005-1	House Appliances Ground Level	233
ID-005-2	House Appliances Mezzanine Level	234

Solar Decathlon Europe

Project: ORCHID HOUSE

Institution: 國立交通大學 National Chiao Tung University

NCTU Architecture 國立交通大學建築研究所

Team Name: NCTU/UNICODE

Address: 1001 Ta-Hsueh Road Hsinchu City 30010 Taiwan

Contact: www.sde.tw

Consultants:

Note:

Mark	Date	Description
DN	2013/04/01	SD Submission
DN	2013/07/01	DDc Submission
ST	2013/11/01	DD Submission
ST	2014/03/03	CD Submission
ST	2014/04/30	CD Submission
ST	2014/06/02	CD Submission

Drawn by: ST

Checked by: -

Scale: -

Unit: -

DWG. Title: SHEET LIST 2

DWG. No.: GE-102

PAGE: 3

14. SITE OPERATION (SO)

SO-001	Trucks shipment 1	235
SO-011	Trucks Shipment During Assembly Phase 1	236
SO-012	Trucks Shipment During Assembly Phase 2	237
SO-013	Trucks Shipment During Assembly Phase 3	238
SO-014	Trucks Shipment During Assembly Phase 4	239
SO-015	Trucks Shipment During Assembly Phase 5	240
SO-021	Trucks Shipment During Disassembly Phase 1	241
SO-022	Trucks Shipment During Disassembly Phase 2	242
SO-023	Trucks Shipment During Disassembly Phase 3	243
SO-024	Trucks Shipment During Disassembly Phase 4	244
SO-025	Trucks Shipment During Disassembly Phase 5	245
SO-101	La Cité du Soleil® Plan	246
SO-102	Assembly Lot Plan	247
SO-103	Disassembly Lot Plan	248
SO-201	Assembly Phase 1	249
SO-202	Assembly Phase 2	250
SO-203	Assembly Phase 3	251
SO-204	Assembly Phase 4	252
SO-205	Assembly Phase 5	253
SO-206	Assembly Phase 6	254
SO-207	Assembly Phase 7	255
SO-208	Assembly Phase 8	256
SO-209	Assembly Phase 9	257
SO-210	Assembly Phase 10	258
SO-301	Disassembly Phase 1	259
SO-302	Disassembly Phase 2	260
SO-303	Disassembly Phase 3	261
SO-304	Disassembly Phase 4	262
SO-305	Disassembly Phase 5	263
SO-306	Disassembly Phase 6	264
SO-307	Disassembly Phase 7	265
SO-308	Disassembly Phase 8	266
SO-309	Disassembly Phase 9	267
SO-310	Disassembly Phase 10	268
SO-401	Assembly Lot Plan Truck 01	269
SO-402	Assembly Lot Plan Truck 02	270
SO-403	Assembly Lot Plan Truck 03	271
SO-404	Assembly Lot Plan Truck 04	272
SO-405	Assembly Lot Plan Truck 05	273
SO-406	Assembly Lot Plan Truck 06	274
SO-407	Assembly Lot Plan Truck 07	275
SO-408	Assembly Lot Plan Truck 08	276
SO-409	Assembly Lot Plan Truck 09	277
SO-410	Assembly Lot Plan Truck 10	278
SO-411	Assembly Lot Plan Truck 11	279
SO-412	Assembly Lot Plan Truck 12	280
SO-413	Assembly Lot Plan Truck 13	281
SO-414	Assembly Lot Plan Truck 14	282
SO-415	Assembly Lot Plan Truck 15	283
SO-501	Disassembly Lot Plan Truck 01	284
SO-502	Disassembly Lot Plan Truck 02 & 03	285
SO-503	Disassembly Lot Plan Truck 04	286
SO-504	Disassembly Lot Plan Truck 05	287
SO-505	Disassembly Lot Plan Truck 06	288
SO-506	Disassembly Lot Plan Truck 07	289
SO-507	Disassembly Lot Plan Truck 08	290
SO-508	Disassembly Lot Plan Truck 09 & 10	291
SO-509	Disassembly Lot Plan Truck 11	292
SO-510	Disassembly Lot Plan Truck 12	293
SO-511	Disassembly Lot Plan Truck 13	294
SO-512	Disassembly Lot Plan Truck 14	295
SO-513	Disassembly Lot Plan Truck 15 & 16	296

15. HEALTH AND SAFETY (HS)

HS-001	Health and Safety in the lot and surroundings 1	297
HS-002	Health and Safety in the lot and surroundings 2	298
HS-101	Health and Safety during the Outside Logistic	299
HS-201	Health and Safety during the Inside Logistic	300
HS-301	Health and Safety during load / unload	301
HS-302	Health and Safety Signposting	302
HS-303	Health and safety PPE	303
HS-401	Health and Safety during Assembly Phase 1	304
HS-402	Health and Safety during Assembly Phase 2	305
HS-403	Health and Safety during Assembly Phase 3	306
HS-404	Health and Safety during Assembly Phase 4	307
HS-405	Health and Safety during Assembly Phase 5	308
HS-406	Health and Safety during Assembly Phase 6	309
HS-407	Health and Safety during Assembly Phase 7	310
HS-408	Health and Safety during Assembly Phase 8	311
HS-409	Health and Safety during Assembly Phase 9	312
HS-410	Health and Safety during Assembly Phase 10	313
HS-501	Health and Safety during Maintenance	314
HS-601	Health and Safety during Disassembly Phase 1	315
HS-602	Health and Safety during Disassembly Phase 2	316
HS-603	Health and Safety during Disassembly Phase 3	317
HS-604	Health and Safety during Disassembly Phase 4	318
HS-605	Health and Safety during Disassembly Phase 5	319
HS-606	Health and Safety during Disassembly Phase 6	320
HS-607	Health and Safety during Disassembly Phase 7	321
HS-608	Health and Safety during Disassembly Phase 8	322
HS-609	Health and Safety during Disassembly Phase 9	323
HS-610	Health and Safety during Disassembly Phase 10	324

16. PUBLIC TOUR (PT)

PT-001	Site accessibility Plan	325
PT-002	Site accessibility Elevation	326
PT-101	House Tour Plan	327
PT-201	House Tour General Information	328

Solar Decathlon Europe

Project: ORCHID HOUSE

Institution: 國立交通大學 National Chiao Tung University

NCTU Architecture 國立交通大學建築研究所

Team Name: NCTU/UNICODE

Address: 1001 Ta-Hsueh Road
Hsinchu City 30010
Taiwan

Contact: www.sde.tw

Consultants:

Note:

Mark	Date	Description
DN	2013/04/01	SD Submission
DN	2013/07/01	DDc Submission
ST	2013/11/01	DD Submission
ST	2014/03/03	CD Submission
ST	2014/04/30	CD Submission
ST	2014/06/02	CD Submission

Drawn by	ST
Checked by	-
Scale	-
Unit	-

DWG. Title: SHEET LIST 3

DWG. No. GE-103

PAGE 4

GENERAL SYMBOLS

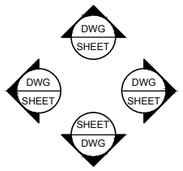

ELEVATION MARK

SECTION MARK

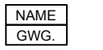

ROOM TAG

GRID NUMBER

ELEVATION MARKER

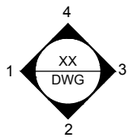

INTERIOR ELEVATION MARKER

DOOR TAG

WINDOW TAG

RECESSED DN LIGHT

WATERPROOF RECESSED DN LIGHT

SPRINKLER

SMOKE DETECTOR

SMOKE ALARM

FIRE EXTINGUISHER

EXIST SIGN

EXIST DIRECTION

Solar Decathlon Europe

Project:

ORCHID HOUSE

Institution:

國立交通大學 National Chiao Tung University

NCTU Architecture 國立交通大學建築研究所

Team Name: NCTU/UNICODE

Address: 1001 Ta-Hsueh Road
Hsinchu City 30010
Taiwan

Contact: www.sde.tw

Consultants:

Note:

Mark	Date	Description
DN	2013/04/01	SD Submission
DN	2013/07/01	DDc Submission
ST	2013/11/01	DD Submission
ST	2014/03/03	CD Submission
ST	2014/04/30	CD Submission
ST	2014/06/02	CD Submission

Drawn by	SS
Checked by	DN
Scale	-
Unit	-

DWG. Title

GENERAL SYMBOLS

DWG. No. GE-201

PAGE 5

GENERAL ABBREVIATIONS

Pound: OR Number
&: And
@: At
ACT: Acoustic Ceiling Tile
AD: Area Drain
AFF: Above Finished Floor
ALUM: Aluminum
ANOD: Anodized
BSMT: Basement
BYND: Beyond
BOT: Bottom
CIP: Cast In Place
CHNL: Channel
CJ: Control Joint
CLG: Ceiling
CLR: Clear
CMU: Concrete Masonry Unit
COL: Column
COMPR: Compressible
CONC: Concrete
CONT: Continuous
CPT: Carpet
CT: Ceramic Tile
CTYD: Courtyard
DBL: Double
DEMO: Demolish or Demolition
DIA: Diameter
DIM: Dimension
DIMS: Dimensions
DN: Down
DR: Door
DWG: Drawing
EA: Each
EJ: Expansion Joint
EL: Elevation
ELEC: Electrical
ELEV: Elevator or Elevation
EPDM: Ethylene Propylene Diene M-Class (Roofing)
EQ: Equal
EXIST: Existing
EXP JT: Expansion Joint
EXT: Exterior
FD: Floor Drain or Fire Department
FEC: Fire Extinguisher Cabinet
FIXT: Fixture
FLR: Floor
FM: Filled Metal
FO: Face Of
FND: Foundation
GA: Gauge
GALV: Galvanized
GWB: Gypsum Wall Board
HC: Hollow Core
HI: High
HM: Hollow Metal
HP: High Point
HR: Hour
HVAC: Heating, Ventilating, And Air Conditioning
IRGWB: Impact Resistant Gypsum Wall Board
ILO: In Lieu Of
INSUL: Insulated or Insulation
INT: Interior
LO: Low
MAX: Maximum
MO: Masonry Opening
MECH: Mechanical
MEMBR: Membrane
MIN: Minimum
MRGWB: Moisture-Resistant Gypsum Wall Board
MTL: Metal
NIC: Not In Contract
NO: Number
NOM: Nominal
OC: On Center
OH: Opposite Hand
OZ: Ounce
PCC: Pre-Cast Concrete
PLUMB: Plumbing
PLYD: Plywood
PT: Pressure Treated
PNT: Paint or Painted
PVC: Polyvinyl Chloride
RBR: Rubber
RCP: Reflected Ceiling Plan
RD: Roof Drain
REQD: Required
RM: Room
SIM: Similar
SPEC: Specified OR Specification
SPK: Sprinkler or Speaker
SSTL: Stainless Steel
STC: Sound Transmission Coefficient
STL: Steel
STRUCT: Structure or Structural
T&G: Tongue And Groove
TELE: Telephone
TLT: Toilet
TO: Top Of
TOC: Top Of Concrete
TOS: Top Of Steel
TPD: Toilet Paper Dispenser
T/D: Telephone/Data
TYP: Typical
UNO: Unless Noted Otherwise
U/S: Underside
VIF: Verify In Field
VP: Vision Panel
W/: With
WD: Wood

Solar Decathlon Europe

Project: ORCHID HOUSE

Institution: 國立交通大學 National Chiao Tung University

NCTU Architecture 國立交通大學建築研究所

Team Name: NCTU/UNICODE
Address: 1001 Ta-Hsueh Road Hsinchu City 30010 Taiwan
Contact: www.sde.tw

Consultants:

Note:

Mark	Date	Description
DN	2013/04/01	SD Submission
DN	2013/07/01	DDc Submission
ST	2013/11/01	DD Submission
ST	2014/03/03	CD Submission
ST	2014/04/30	CD Submission
ST	2014/06/02	CD Submission

Drawn by	DN
Checked by	DN
Scale	-
Unit	-

DWG. Title: GENERAL ABBREVIATIONS

DWG. No. GE-211

PAGE 6

INTRODUCTION

Taiwan is a country spanning only 36,193 km2 but with a population of 23.34 million (compare with France's 674,834 km2 and 65.7 million people). The population density is especially high because two-thirds of the island is composed of mountains, and as a result most people live along the coastal areas. It is especially crowded in urban areas, such as the capitol city, Taipei, which is one of the top ten densest cities in the world. In addition to the high population density, Taipei also developed rapidly over the years, both of which contribute to a random assortment of architecture in the city that expands horizontally instead of vertically to conserve space.

However, also as a result of the rapid development, many of the residential buildings were not built to last and have infrastructure that is now rundown or outdated. In recent years, new residential buildings are sky scraper apartments, which are usually only affordable by the wealthy upper class because of the luxury design and locations in the city center.

This population growth results in the lack of living space and sufficient public amenity, and cause middle classes moving toward the periphery, even outside of city. The majority of these people are young professionals who just graduated from collage whom have worked a few years, and they are not able to afford a house yet. However, most of them works in the city center and commute, and caused major traffic congestions with millions of cars and motorcycle. Consequently, the city is left with a high carbon dioxide pollution, and the decrease living quality.

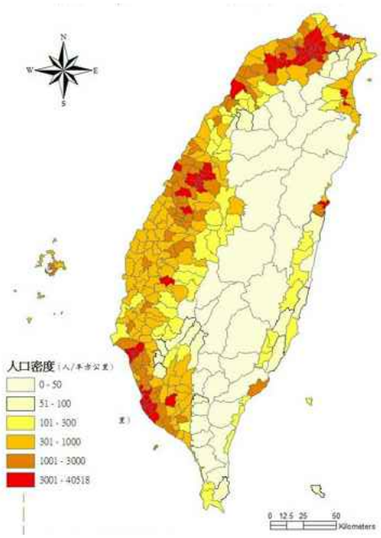

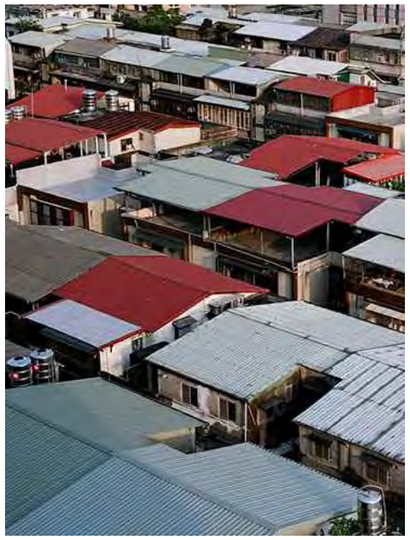

Taipei, Taiwan

Population: 2,650,900
Area: 271.8 km²
Density: 9,753 Person/km²

Solar Decathlon Europe

Project: ORCHID HOUSE

Institution: 國立交通大學 National Chiao Tung University

NCTU Architecture 國立交通大學建築研究所

Team Name: NCTU/UNICODE
Address: 1001 Ta-Hsueh Road
Hsinchu City 30010
Taiwan
Contact: www.sde.tw

Consultants:

Note:

Mark	Date	Description
DN	2013/04/01	SD Submission
DN	2013/07/01	DDc Submission
ST	2013/11/01	DD Submission
ST	2014/03/03	CD Submission
ST	2014/04/30	CD Submission
ST	2014/06/02	CD Submission

Drawn by	ST
Checked by	DN
Scale	-
Unit	-

DWG. Title: Urban Project Location

DWG. No. GE-301

PAGE 7

Urban Acupuncture

Taipei city population reached its 20-year peak and residential building has been constructed in various types. The majorities are a duplex apartment, which is relatively wide and 4 to 5 story building, and a row house that is extremely narrow and deep single family owned. These two types were constructed during the modern democracy period. Most of flat-roof duplex apartment and row house are facing problems: leakage, heat absorption and no public facilities. Therefore, the illegal make-shift metal roofed shelters have been introduced widely in most of the residential buildings and create unregulated cityscape of Taipei.

For Orchid House urban design strategy, NCTU UNICODE focus districts where the most of duplex apartment and row house are located as the most needed area for urban regeneration to vitalize not only the residential building, but also these districts.

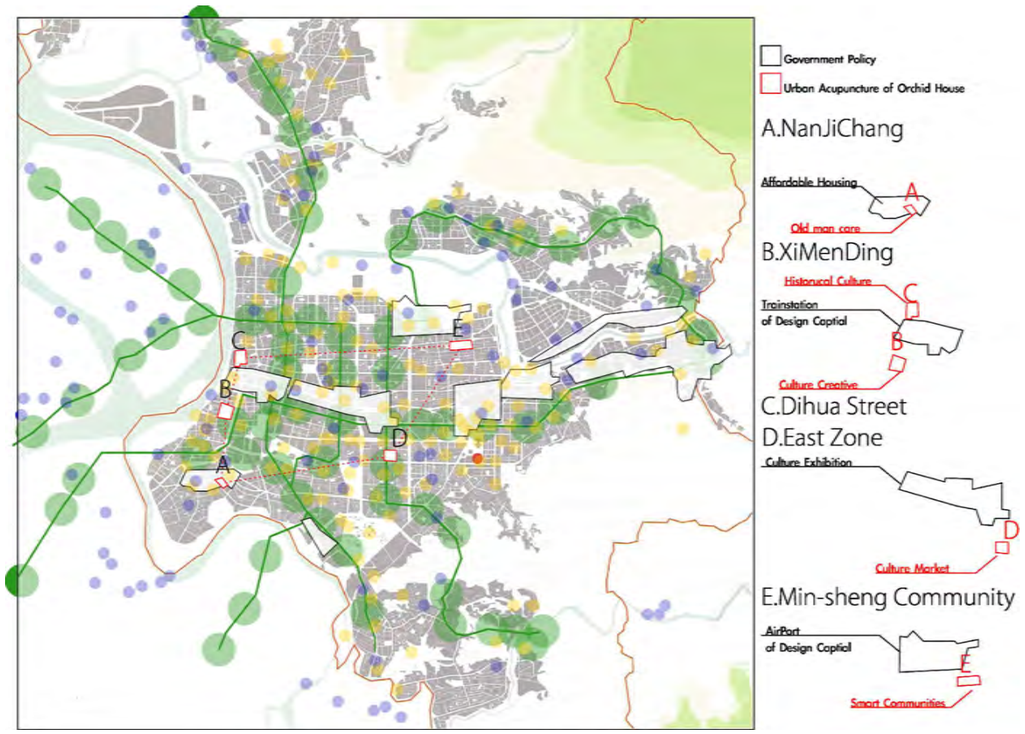

Ximending	**Phase 1** *Pilot*	Initiate Renewable Energy Policy Initiate Smart Grid Policy (Micro Grid) Initiate Orchid House Cluster Initiate New Economy Engine
Di-hua Street	**Phase 2** *Development*	Install Renewable Energy Source Istall bigger Smart Grid Istall More Orchid House Clusters Invites More Economy Engines
Nan-Ji Chang	**Phase 3** *Implement*	Implement R&D programs for Renewable Energy Implement Smart Grid to most of area of district Increase number of Ochid House Clusters Promote economy eingines
Ming-Sheng Community	**Phase 4** *Enhancement*	Enhance Renewable Energy Technologies Enhance Smart Grid Use Enhance Ochid House Clusters Enhance economy eingines
Da'an District	**Phase 5** *Extension*	Extend Renewable Energy Technologies Extend Smart Grid Use & Area Extend Ochid House Clusters Extend economy eingines

Zero Energy District: Ximending

As main focal point of Ximending Zero Energy District plan, NCTU UNICODE proposes not only PV panel implementation to buildings, but also larger scale of renewable energy sources such as CSP (Concentrated Solar Power), Biomass, Wind power and Geothermal. In order for all renewable energy sources to be distributed efficiently, advanced applications of Wide-area-Measurement System (WAMS) is installed one of larger footprint building rooftops, and Data Centre (MDMS) serve all the energy with automation system. Furthermore, AMI (Advanced Metering Infrastructure) is installed to Orchid House Clusters to manage power supply within houses. Please refer Architecture Design Narrative for farther details of AMI integration to housing appliances.

The Orchid House Cluster acts as a pilot project for further development of smart building energy management technology. Eventually, AMI system will be installed to most of buildings in the district to increase 20% energy usage efficiency from conventional grid system.

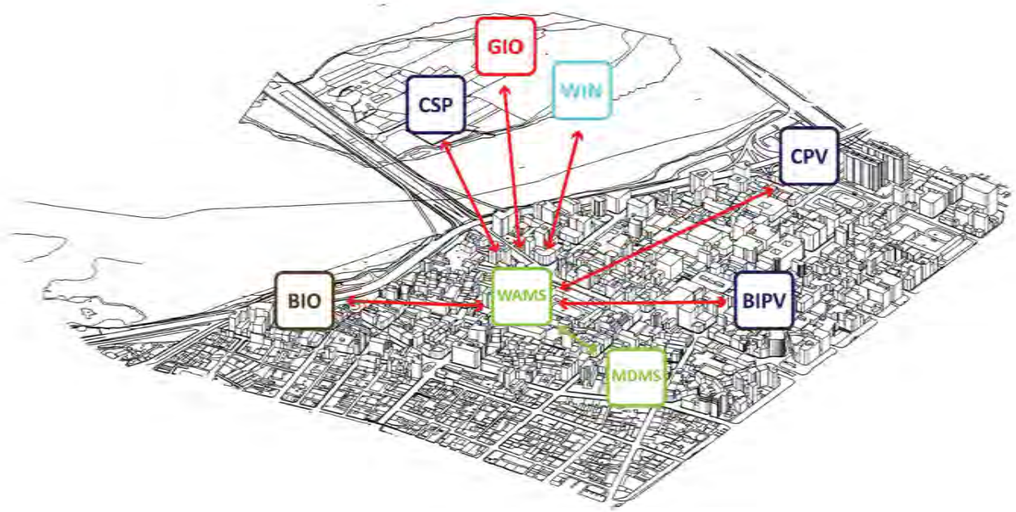

WAMS: Wide-area Measurement System
MDMS: Data Center
GIO: Geothermal
BIO: Biomass
CSP: Concentrated Solar Power
CPV: Concentrated Photovoltaic
BIPV: Building Integrated Photovoltaic
WIN: Wind Power

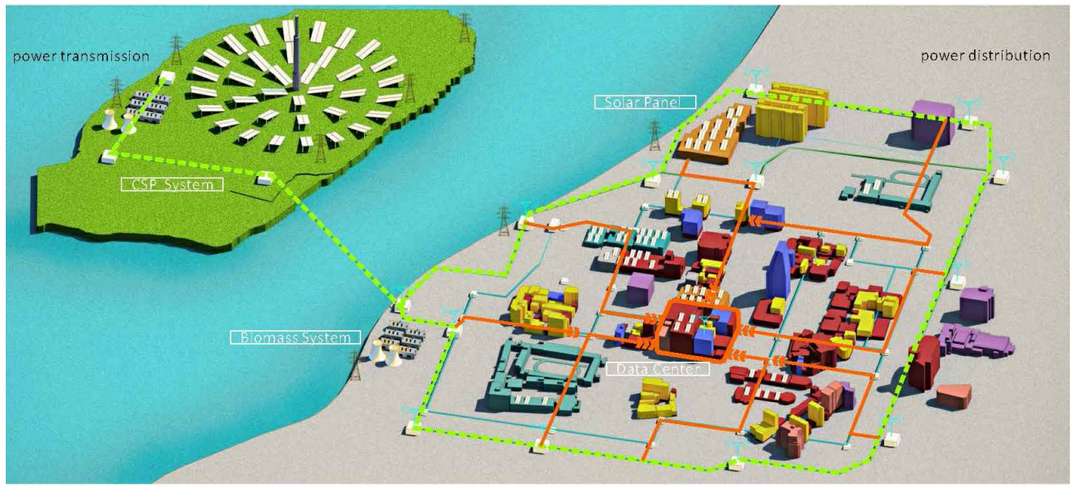

Solar Decathlon Europe

Project: ORCHID HOUSE

Institution: 國立交通大學 National Chiao Tung University

NCTU Architecture 國立交通大學建築研究所

Team Name: NCTU/UNICODE
Address: 1001 Ta-Hsueh Road Hsinchu City 30010 Taiwan
Contact: www.sde.tw

Consultants:

Note:

Mark	Date	Description
DN	2013/04/01	SD Submission
DN	2013/07/01	DDc Submission
ST	2013/11/01	DD Submission
ST	2014/03/03	CD Submission
ST	2014/04/30	CD Submission
ST	2014/06/02	CD Submission

Drawn by	RL
Checked by	DN
Scale	-
Unit	-

DWG. Title: URBAN PROPOSAL EXPLANATION 1

DWG. No.: GE-310

PAGE: 8

Orchid Cluster

Orchid House extension on existing building in Taipei city plays not only critical role for Ximending zero energy district urban planning, but also to apply new concept of urban regeneration. Almost 50% of residential building in Taipei city are over 30 years old and typically demolished during the renewal planning. However, NCTU UNICODE points out the problem of city re-development organized by government and executed by private developers. The developer tends to acquire larger number of properties to combine the land FAR (Floor Area Ratio) to build up high-rise residential condominium, which is not affordable for average income level and treated as investment target by investors.

Orchid House will proved unique opportunity for not only the building owner, but also the targeted tenants, who needs housing support to pursue their young profession to promote new creative industry in Taipei.

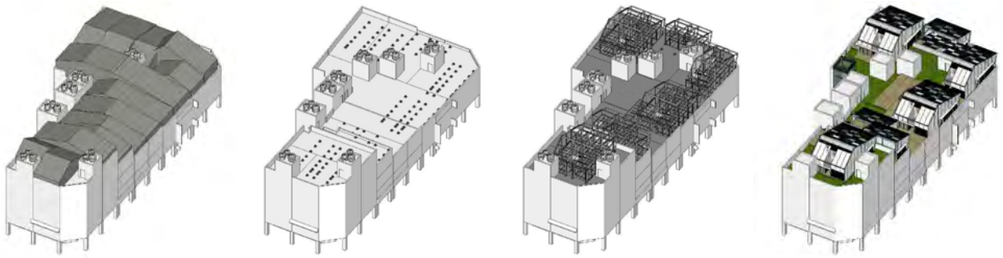

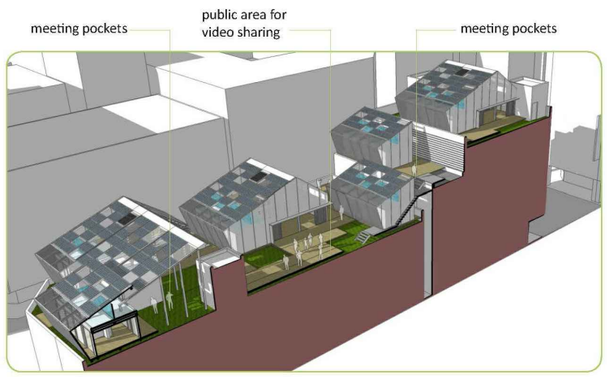

Cluster Formation

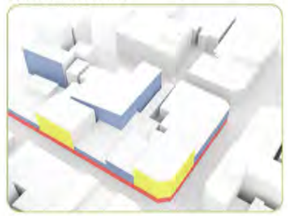

1. Programme

Red: shops
Yellow: offices
Blue: residential

2. Alignments and setback

Ximending has a distinct characteristics of the "chamfered" corners, which allows a better viewing angle when turning

3. Potential rooftop surfaces

The highlighted rooftop area adds up to around 4360 square meters

4. Pedestrian Circulation

Ximending has several narrow alleys which is good for making a new entrance for the Orchid Cluster

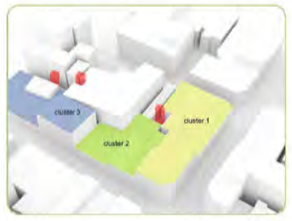

5. Three clusters

Within the block, 3 locations are identified to locate elevators and staircase

6. Cluster Location

Two types of units are placed on the roof:
six one-bedrooms (48sm each)
ten studios (26 sm each)

7. Cluster Pockets

To create a balanced rooftop space, several pockets are designed to host seperate meetings

8. Green space

2463 square meter (56.5%) of green space is released from the rooftop for public sharing

9. Outdoor walkway system

Elevated circulation path connects different levels of rooftop and create community zones

Solar Decathlon Europe

Project: ORCHID HOUSE

Institution: 國立交通大學 National Chiao Tung University

NCTU Architecture 國立交通大學建築研究所

Team Name: NCTU/UNICODE
Address: 1001 Ta-Hsueh Road Hsinchu City 30010 Taiwan
Contact: www.sde.tw

Consultants:

Note:

Mark	Date	Description
DN	2013/04/01	SD Submission
DN	2013/07/01	DDc Submission
ST	2013/11/01	DD Submission
ST	2014/03/03	CD Submission
ST	2014/04/30	CD Submission
ST	2014/06/02	CD Submission

Drawn by	SC
Checked by	DN
Scale	-
Unit	-

DWG. Title: URBAN PROPOSAL EXPLANATION 2

DWG. No. GE-311

PAGE 9

Taipei Residential Type Analysis

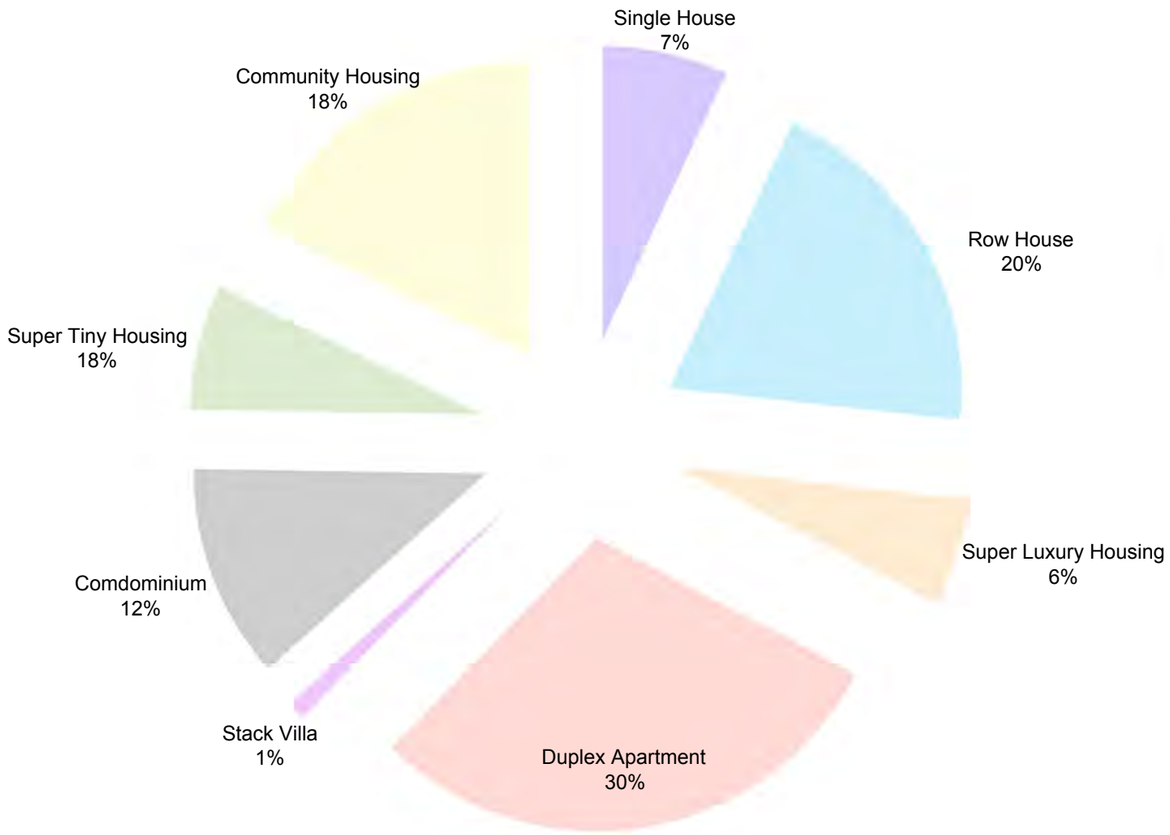

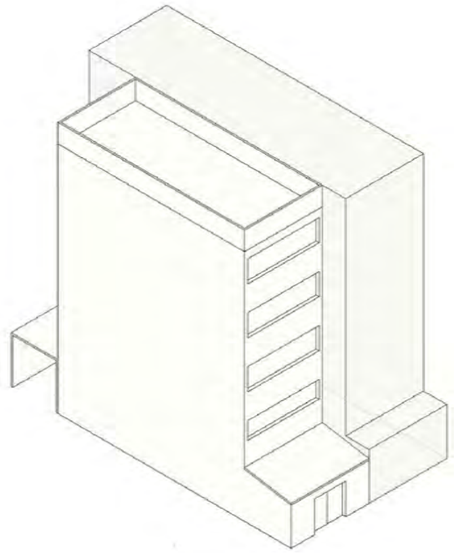

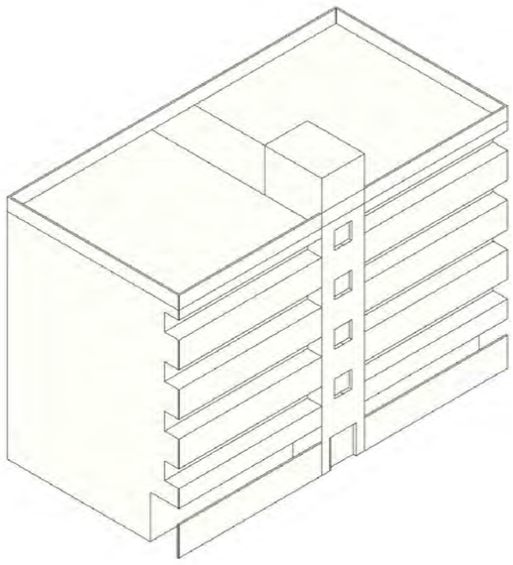

DESCRIPTION

Row House and Duplex Apartment are the most number of Taipei residential building Type. These two types are usually 4 to 5 floor high and the oldest building in Taipei, which are about 20 to 30 years old and facing some following problems:

1. Top floor Leaking
2. Top floor is too hot
3. No Public Facility

Presently, most households live in flat-roofed row houses and duplex apartments, but due to a lack of space, people try to expand their living area by building on their roofs.

The illegal make-shift metal-roofed shelters that result are unregulated and displeasing to the eye. Lastly, social housing projects have fallen to the wayside and do not adequately consider the needs of disadvantaged groups, social justice, and the problems of housing for those with low-income.

Solar Decathlon Europe

Project: ORCHID HOUSE

Institution: 國立交通大學 National Chiao Tung University

NCTU Architecture 國立交通大學建築研究所

Team Name: NCTU/UNICODE
Address: 1001 Ta-Hsueh Road Hsinchu City 30010 Taiwan
Contact: www.sde.tw

Consultants:

Note:

Mark	Date	Description
DN	2013/04/01	SD Submission
DN	2013/07/01	DDc Submission
ST	2013/11/01	DD Submission
ST	2014/03/03	CD Submission
ST	2014/04/30	CD Submission
ST	2014/06/02	CD Submission

Drawn by	ST
Checked by	DN
Scale	-
Unit	-

DWG. Title: EXISTING BUILDING DRAWING AND ANALYSIS

DWG. No. GE-320

PAGE 10

Solar Decathlon Europe

Project:

ORCHID HOUSE

Institution:

國立交通大學 National Chiao Tung University

NCTU Architecture 國立交通大學建築研究所

Team Name: NCTU/UNICODE
Address: 1001 Ta-Hsueh Road
Hsinchu City 30010
Taiwan
Contact: www.sde.tw

Consultants:

Note:

Mark	Date	Description
DN	2013/04/01	SD Submission
DN	2013/07/01	DDc Submission
ST	2013/11/01	DD Submission
ST	2014/03/03	CD Submission
ST	2014/04/30	CD Submission
ST	2014/06/02	CD Submission

Drawn by	CC
Checked by	DN
Scale	-
Unit	-

DWG. Title

COMPETITION DWELLING

DWG. No. GE-330

PAGE 11

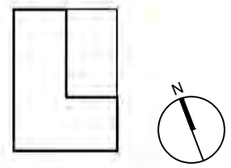

Solar Decathlon Europe

Project:

ORCHID HOUSE

Institution:

國立交通大學
National Chiao Tung University

NCTU Architecture
國立交通大學建築研究所

Team Name: NCTU/UNICODE

Address: 1001 Ta-Hsueh Road
Hsinchu City 30010
Taiwan

Contact: www.sde.tw

Consultants:

Note:

Mark	Date	Description
DN	2013/04/01	SD Submission
DN	2013/07/01	DDc Submission
ST	2013/11/01	DD Submission
ST	2014/03/03	CD Submission
ST	2014/04/30	CD Submission
ST	2014/06/02	CD Submission

Drawn by	CC
Checked by	DN
Scale	-
Unit	-

DWG. Title

PAVILION EAST SIDE RENDERING

DWG. No. GE-401

PAGE 12

Solar Decathlon Europe

Project:

ORCHID HOUSE

Institution:

國立交通大學 National Chiao Tung University

NCTU Architecture 國立交通大學建築研究所

Team Name: NCTU/UNICODE

Address: 1001 Ta-Hsueh Road
Hsinchu City 30010
Taiwan

Contact: www.sde.tw

Consultants:

Note:

Mark	Date	Description
DN	2013/04/01	SD Submission
DN	2013/07/01	DDc Submission
ST	2013/11/01	DD Submission
ST	2014/03/03	CD Submission
ST	2014/04/30	CD Submission
ST	2014/06/02	CD Submission

Drawn by	CC
Checked by	DN
Scale	-
Unit	-

DWG. Title

PAVILION WEST SIDE RENDERING

DWG. No. GE-402

PAGE 13

Solar Decathlon Europe

Project:

ORCHID HOUSE

Institution:

國立交通大學 National Chiao Tung University

NCTU Architecture 國立交通大學建築研究所

Team Name: NCTU/UNICODE

Address: 1001 Ta-Hsueh Road
Hsinchu City 30010
Taiwan

Contact: www.sde.tw

Consultants:

Note:

Mark	Date	Description
DN	2013/04/01	SD Submission
DN	2013/07/01	DDc Submission
ST	2013/11/01	DD Submission
ST	2014/03/03	CD Submission
ST	2014/04/30	CD Submission
ST	2014/06/02	CD Submission

Drawn by	ST
Checked by	DN
Scale	1:1000
Unit	mm

DWG. Title

La Cité du Soleil® PLAN

DWG. No. AR-001

PAGE 14

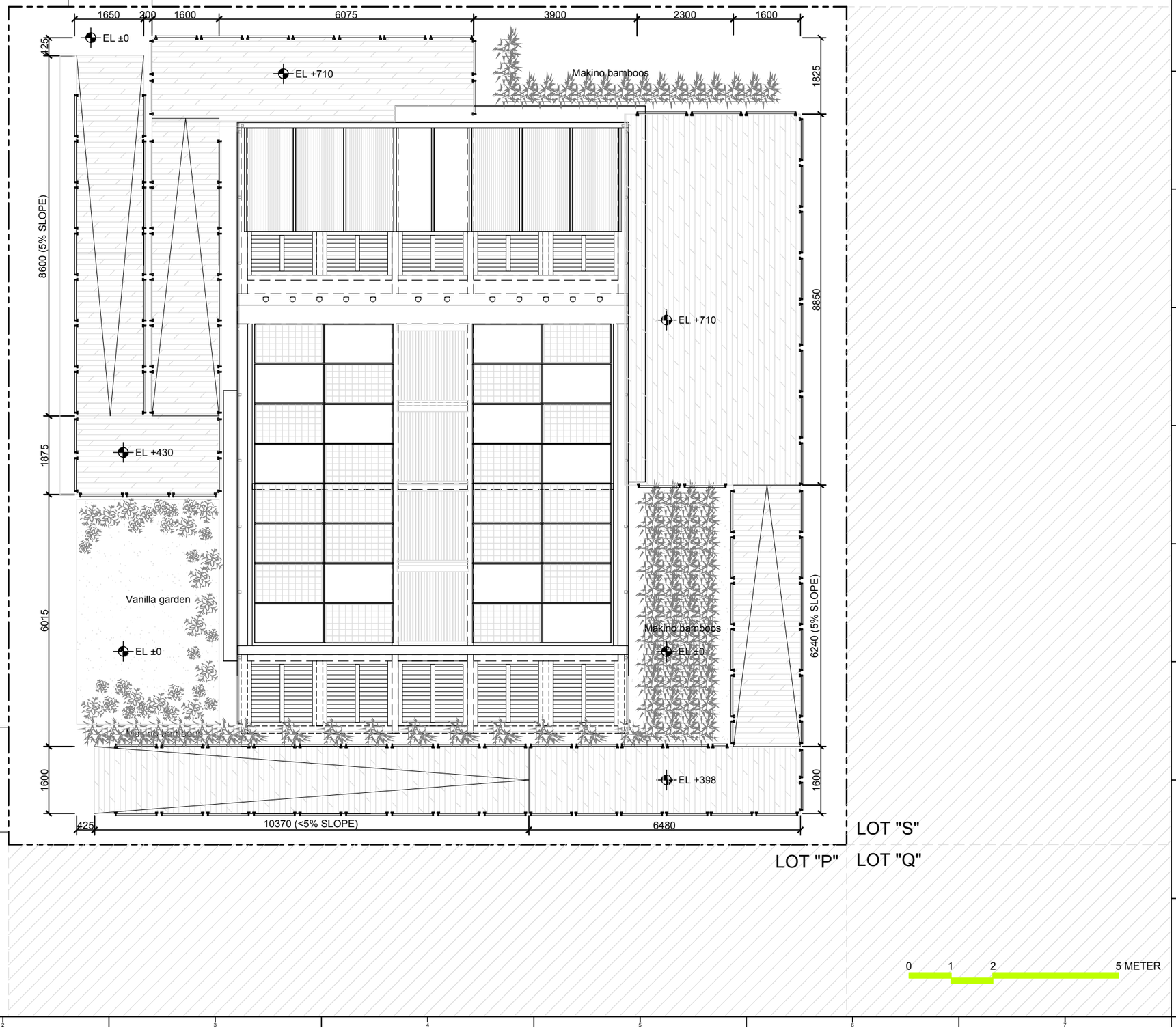

Solar Decathlon Europe

Project:

ORCHID HOUSE

Institution:

國立交通大學 National Chiao Tung University

NCTU Architecture 國立交通大學建築研究所

Team Name: NCTU/UNICODE

Address: 1001 Ta-Hsueh Road
Hsinchu City 30010
Taiwan

Contact: www.sde.tw

Consultants:

Note:

N

Mark	Date	Description
DN	2013/04/01	SD Submission
DN	2013/07/01	DDc Submission
ST	2013/11/01	DD Submission
ST	2014/03/03	CD Submission
ST	2014/04/30	CD Submission
ST	2014/06/02	CD Submission

Drawn by	CF
Checked by	-
Scale	1:100
Unit	mm

DWG. Title

SITE PLAN

DWG. No. AR-002

PAGE 15

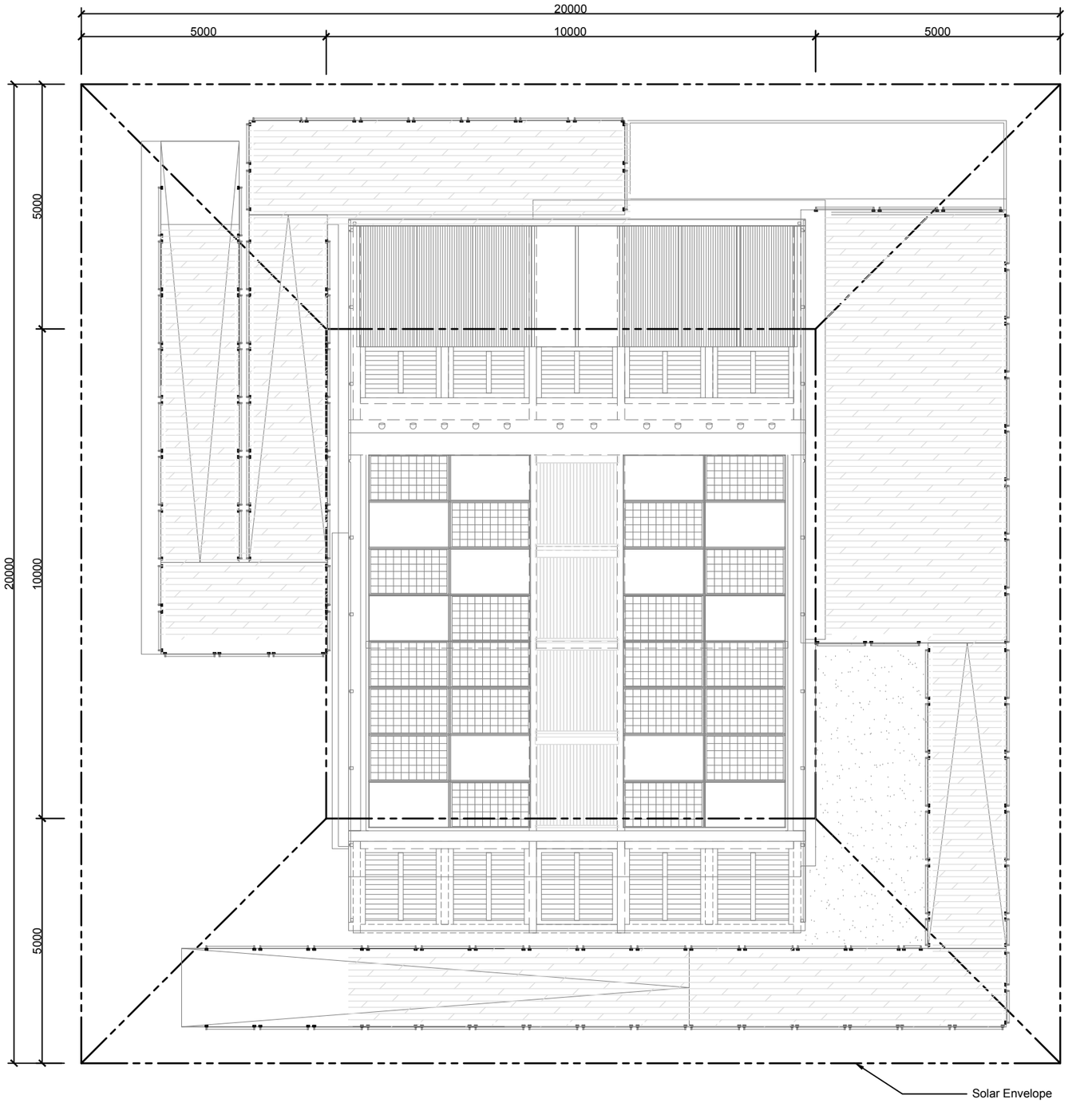

PLAN

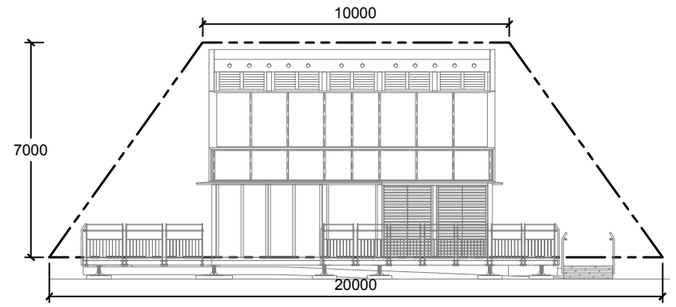

NORTH

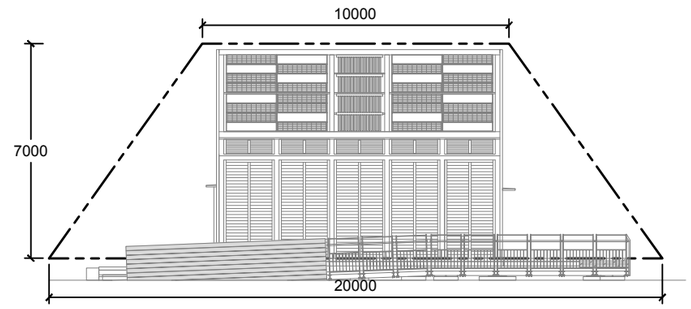

SOUTH

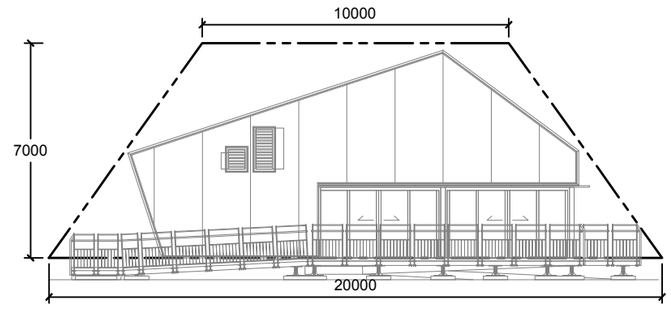

EAST

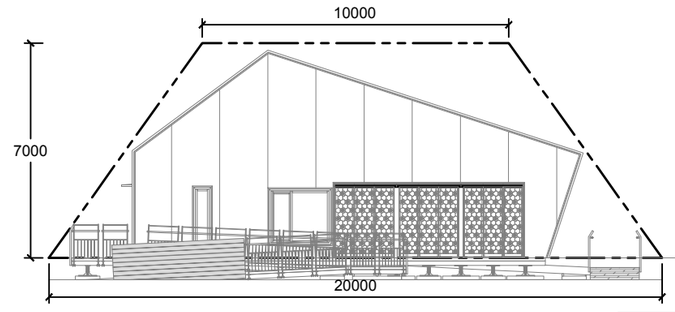

WEST

Solar Decathlon Europe

Project: ORCHID HOUSE

Institution: 國立交通大學 National Chiao Tung University

NCTU Architecture 國立交通大學建築研究所

Team Name:	NCTU/UNICODE
Address:	1001 Ta-Hsueh Road Hsinchu City 30010 Taiwan
Contact:	www.sde.tw

Consultants:

Note:

N

Mark	Date	Description
DN	2013/04/01	SD Submission
DN	2013/07/01	DDc Submission
ST	2013/11/01	DD Submission
ST	2014/03/03	CD Submission
ST	2014/04/30	CD Submission
ST	2014/06/02	CD Submission

Drawn by	CF
Checked by	DN
Scale	1:100
Unit	mm

DWG. Title: SOLAR ENVELOPE

DWG. No. AR-011

PAGE 16

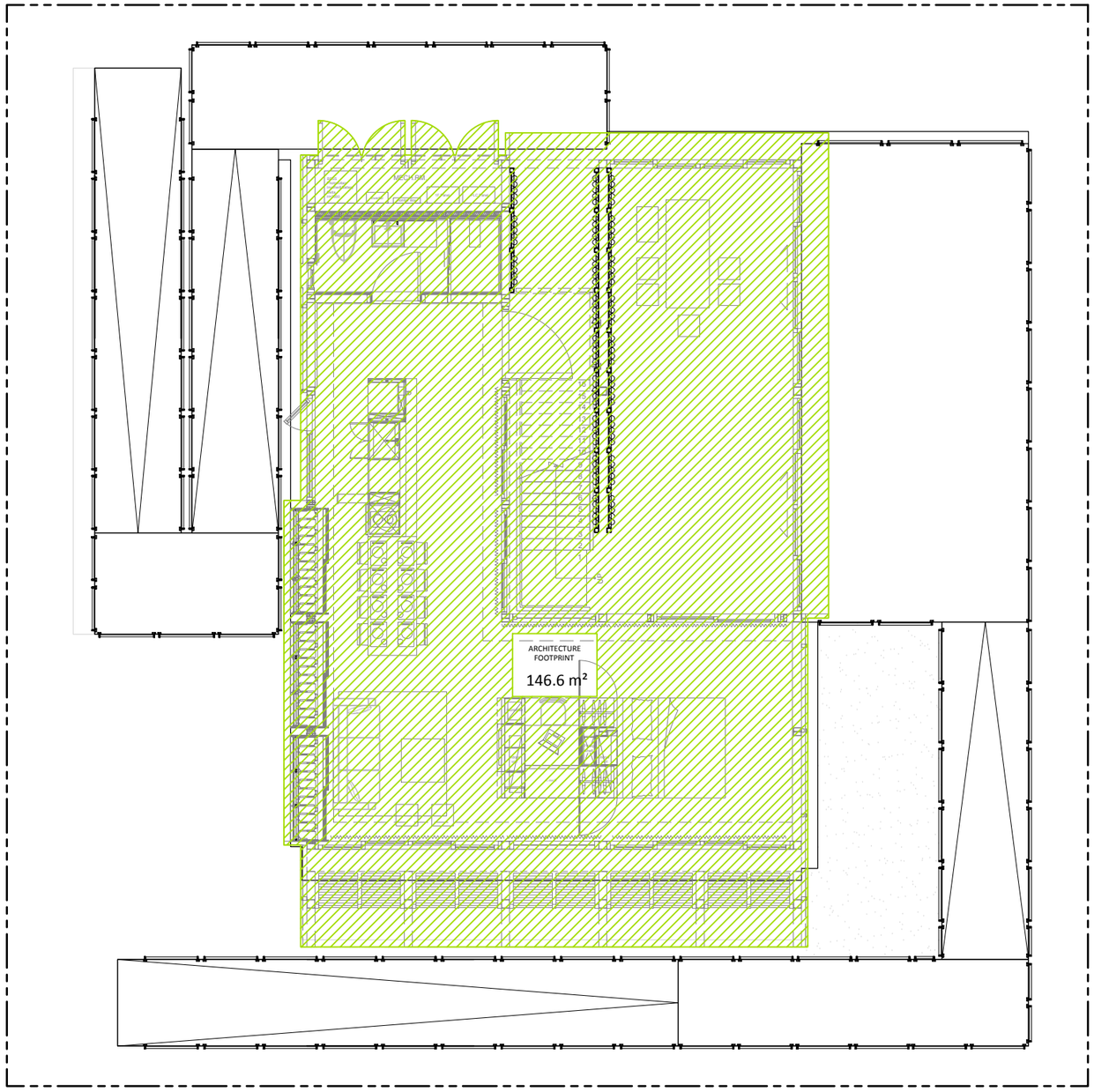

0 1 2 5 METER

Solar Decathlon Europe

Project:

ORCHID HOUSE

Institution:

國立交通大學 National Chiao Tung University

NCTU Architecture 國立交通大學建築研究所

Team Name: NCTU/UNICODE

Address: 1001 Ta-Hsueh Road
Hsinchu City 30010
Taiwan

Contact: www.sde.tw

Consultants:

Note:

Mark	Date	Description
DN	2013/04/01	SD Submission
DN	2013/07/01	DDc Submission
ST	2013/11/01	DD Submission
ST	2014/03/03	CD Submission
ST	2014/04/30	CD Submission
ST	2014/06/02	CD Submission

Drawn by	CF
Checked by	DN
Scale	1:100
Unit	mm

DWG. Title

ARCHITECTURE FOOTPRINT

DWG. No. AR-014

PAGE 17

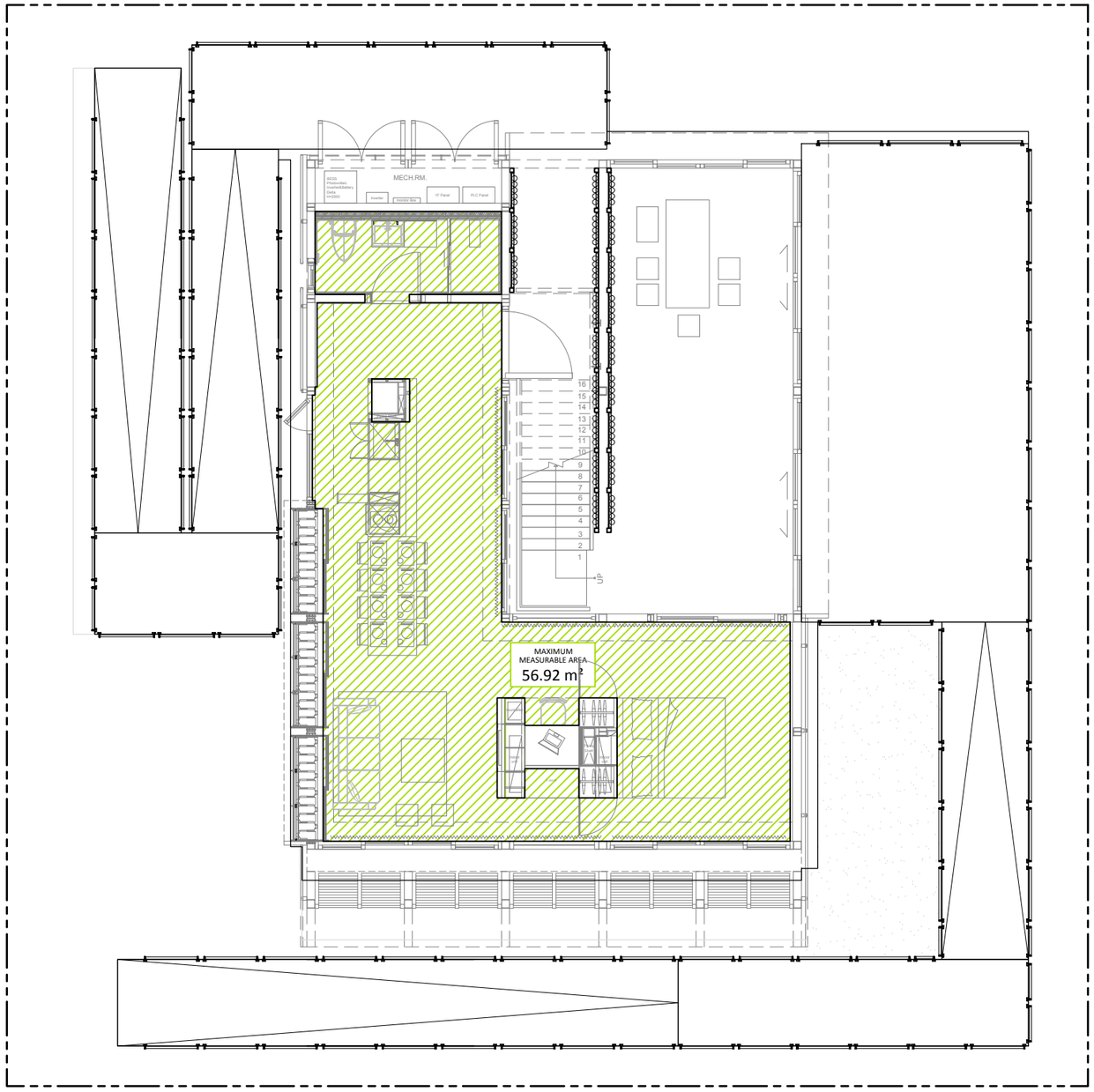

0 1 2 5 METER

Solar Decathlon Europe

Project:

ORCHID HOUSE

Institution:

國立交通大學
National Chiao Tung University

NCTU Architecture
國立交通大學建築研究所

Team Name: NCTU/UNICODE

Address: 1001 Ta-Hsueh Road
Hsinchu City 30010
Taiwan

Contact: www.sde.tw

Consultants:

Note:

N

Mark	Date	Description
DN	2013/04/01	SD Submission
DN	2013/07/01	DDc Submission
ST	2013/11/01	DD Submission
ST	2014/03/03	CD Submission
ST	2014/04/30	CD Submission
ST	2014/06/02	CD Submission

Drawn by	CF
Checked by	DN
Scale	1:100
Unit	mm

DWG. Title

MEASURABLE AREA

DWG. No. AR-017

PAGE 18

Solar Decathlon Europe

Project: ORCHID HOUSE

Institution: 國立交通大學 National Chiao Tung University

NCTU Architecture 國立交通大學建築研究所

Team Name: NCTU/UNICODE

Address: 1001 Ta-Hsueh Road
Hsinchu City 30010
Taiwan

Contact: www.sde.tw

Consultants:

Note:

Mark	Date	Description
DN	2013/04/01	SD Submission
DN	2013/07/01	DDc Submission
ST	2013/11/01	DD Submission
ST	2014/03/03	CD Submission
ST	2014/04/30	CD Submission
ST	2014/06/02	CD Submission

Drawn by	CF
Checked by	DN
Scale	1:60
Unit	mm

DWG. Title

GROUND LEVEL PLAN

DWG. No. AR-021

PAGE 19

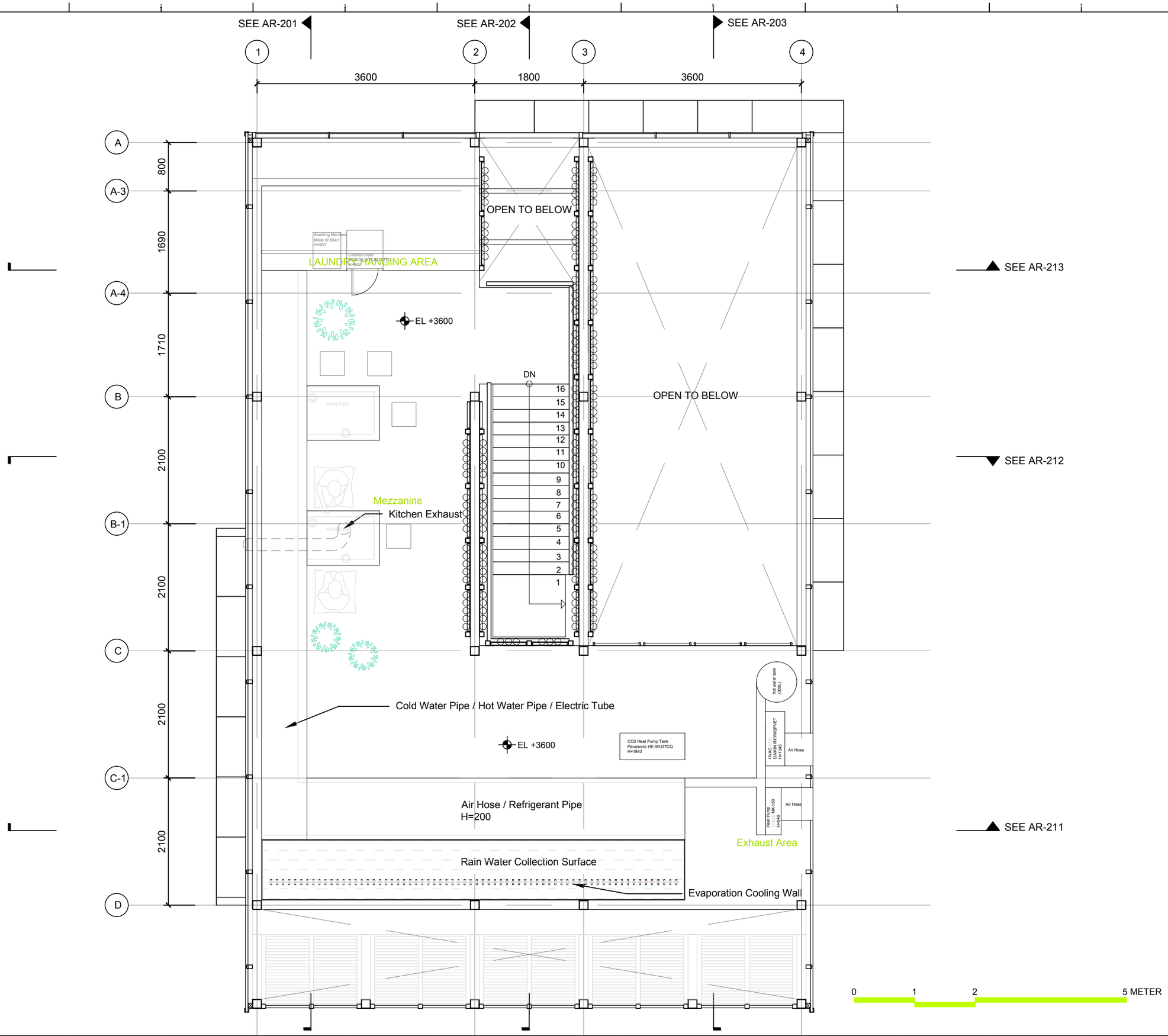

Solar Decathlon Europe

Project: ORCHID HOUSE

Institution: 國立交通大學 National Chiao Tung University

NCTU Architecture 國立交通大學建築研究所

Team Name: NCTU/UNICODE

Address: 1001 Ta-Hsueh Road
Hsinchu City 30010
Taiwan

Contact: www.sde.tw

Consultants:

Note:

Mark	Date	Description
DN	2013/04/01	SD Submission
DN	2013/07/01	DDc Submission
ST	2013/11/01	DD Submission
ST	2014/03/03	CD Submission
ST	2014/04/30	CD Submission
ST	2014/06/02	CD Submission

Drawn by	CF
Checked by	DN
Scale	1:60
Unit	mm

DWG. Title

MEZZANINE LEVEL PLAN

DWG. No. AR-022

PAGE 20

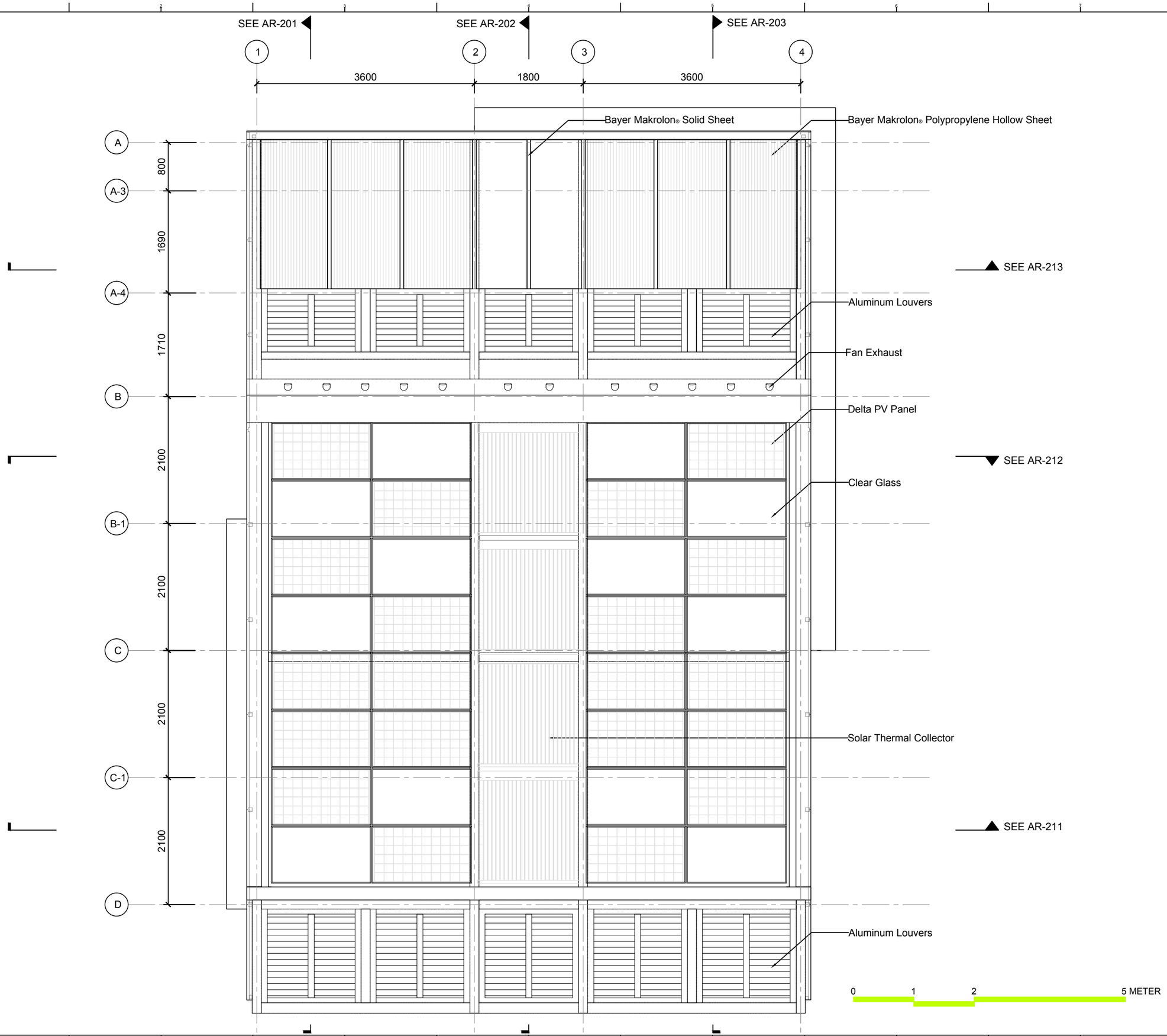

Solar Decathlon Europe

Project:

ORCHID HOUSE

Institution:

國立交通大學 National Chiao Tung University

NCTU Architecture 國立交通大學建築研究所

Team Name: NCTU/UNICODE

Address: 1001 Ta-Hsueh Road
Hsinchu City 30010
Taiwan

Contact: www.sde.tw

Consultants:

Note:

Mark	Date	Description
DN	2013/04/01	SD Submission
DN	2013/07/01	DDc Submission
ST	2013/11/01	DD Submission
ST	2014/03/03	CD Submission
ST	2014/04/30	CD Submission
ST	2014/06/02	CD Submission

Drawn by	CF
Checked by	DN
Scale	1:60
Unit	mm

DWG. Title

ROOF LEVEL PLAN

DWG. No. AR-031

PAGE 21

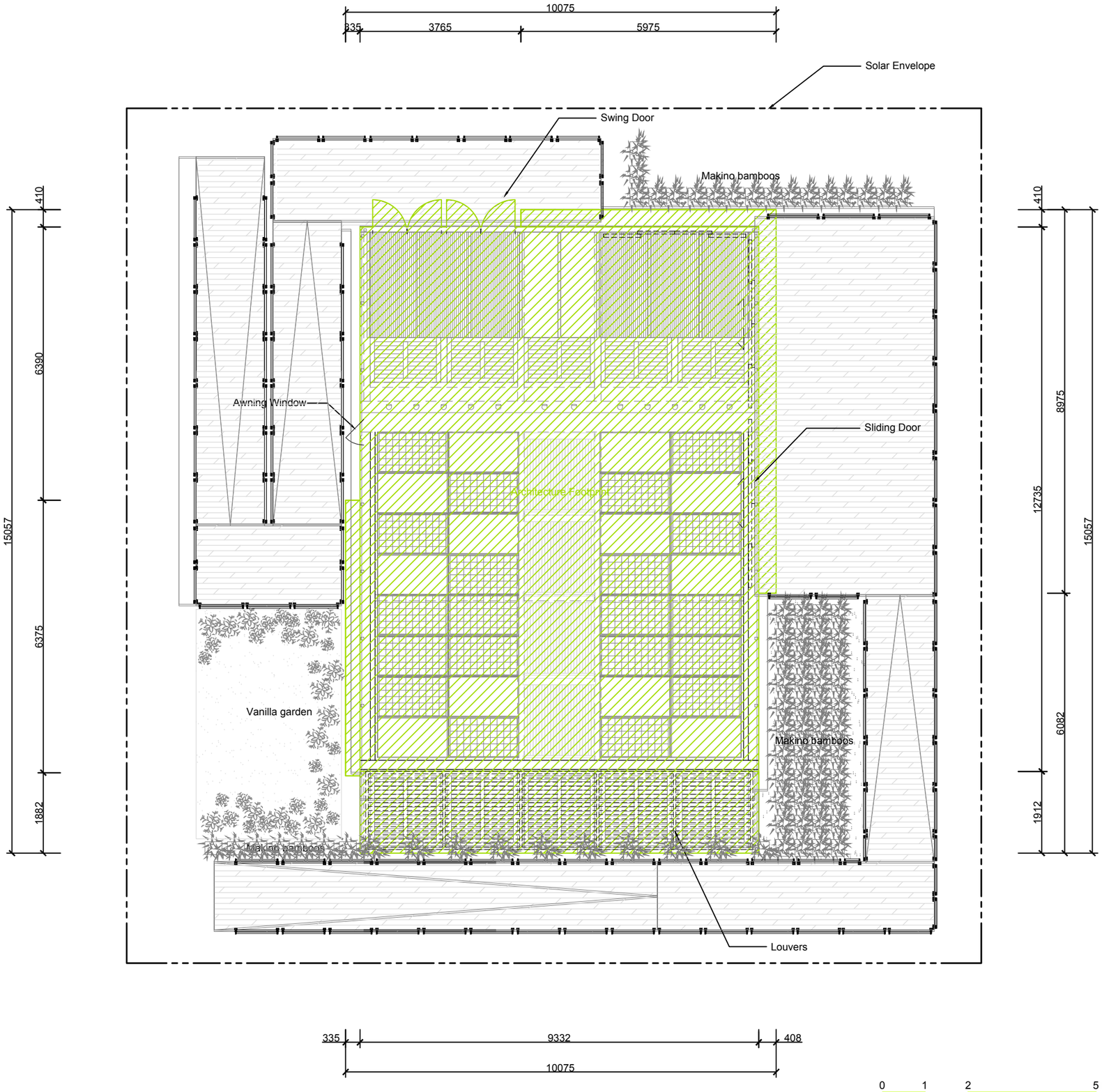

Footprint Calculation

House：120.4 M2
Canopy：8.7 M2
Louvers：17.8 M2

Total：146.9 M2

House
9.332x12.735+0.6375x0.7854x3.14=120.4 (M2)

Canopy
5.975x0.41+(8.975-0.41)x0.408+6.375x0.335=8.0 (M2)

Louvers
9.332x1.912=17.8 (M2)

Total
120.41+8.05+17.84=146.3 (M2)

Solar Decathlon Europe

Project: ORCHID HOUSE

Institution: 國立交通大學 National Chiao Tung University

NCTU Architecture 國立交通大學建築研究所

Team Name: NCTU/UNICODE
Address: 1001 Ta-Hsueh Road
Hsinchu City 30010
Taiwan
Contact: www.sde.tw

Consultants:

Note:

Mark	Date	Description
DN	2013/04/01	SD Submission
DN	2013/07/01	DDc Submission
ST	2013/11/01	DD Submission
ST	2014/03/03	CD Submission
ST	2014/04/30	CD Submission
ST	2014/06/02	CD Submission

Drawn by	CF
Checked by	DN
Scale	1:100
Unit	mm

DWG. Title

RECONFIGURABLE FEATURES 1

DWG. No. AR-041

PAGE 22

Ground Level

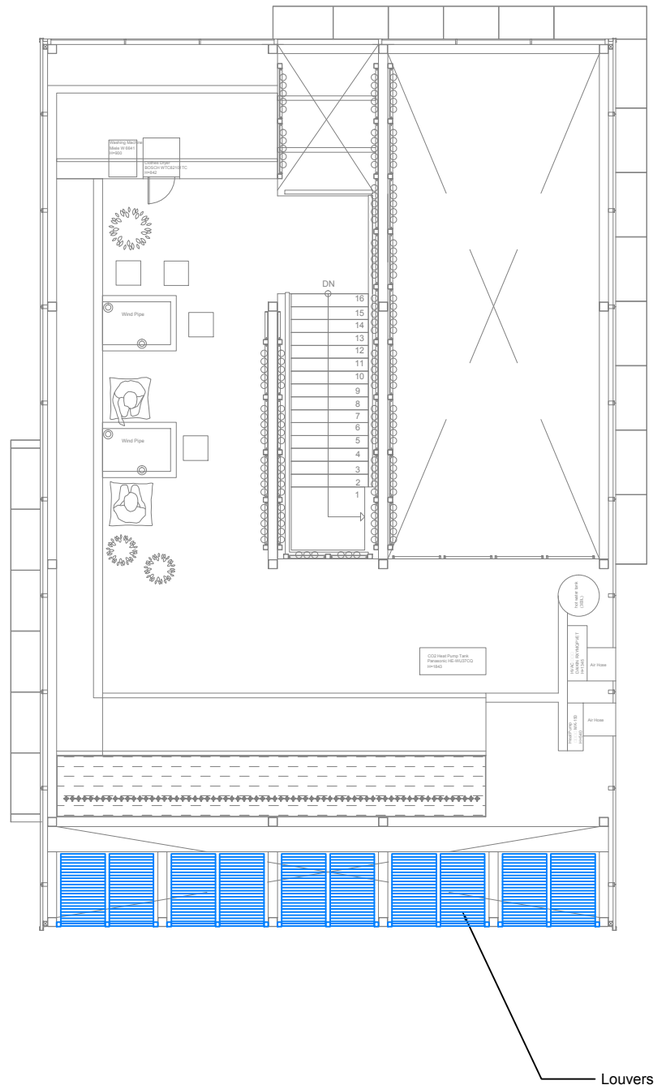

Mezzanine Level

0 1 2 5 METER

Solar Decathlon Europe

Project: ORCHID HOUSE

Institution: 國立交通大學 National Chiao Tung University

NCTU Architecture 國立交通大學建築研究所

Team Name: NCTU/UNICODE

Address: 1001 Ta-Hsueh Road Hsinchu City 30010 Taiwan

Contact: www.sde.tw

Consultants:

Note:

Mark	Date	Description
DN	2013/04/01	SD Submission
DN	2013/07/01	DDc Submission
ST	2013/11/01	DD Submission
ST	2014/03/03	CD Submission
ST	2014/04/30	CD Submission
ST	2014/06/02	CD Submission

Drawn by	CF
Checked by	DN
Scale	1:100
Unit	mm

DWG. Title: RECONFIGURABLE FEATURES 2

DWG. No. AR-042

PAGE 23

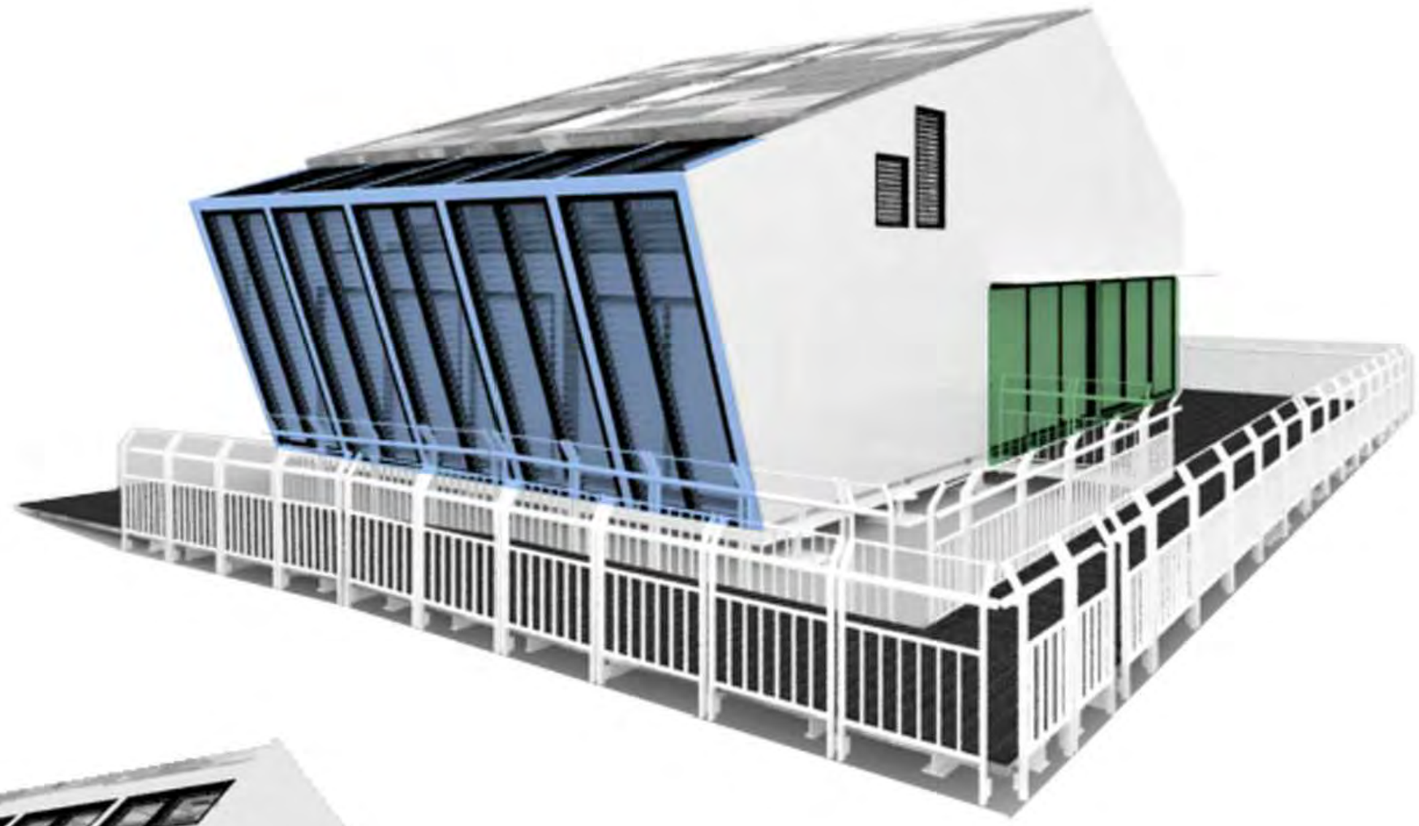

Louvers
Sliding Door
Swing Door
Awning Window

Solar Decathlon Europe

Project:

ORCHID HOUSE

Institution:

國立交通大學
National Chiao Tung University

NCTU Architecture
國立交通大學建築研究所

Team Name: NCTU/UNICODE

Address: 1001 Ta-Hsueh Road
Hsinchu City 30010
Taiwan

Contact: www.sde.tw

Consultants:

Note:

Mark	Date	Description
DN	2013/04/01	SD Submission
DN	2013/07/01	DDc Submission
ST	2013/11/01	DD Submission
ST	2014/03/03	CD Submission
ST	2014/04/30	CD Submission
ST	2014/06/02	CD Submission

Drawn by	CF
Checked by	DN
Scale	N/A
Unit	N/A

DWG. Title

RECONFIGURABLE FEATURES 3

DWG. No.	PAGE
AR-043	24

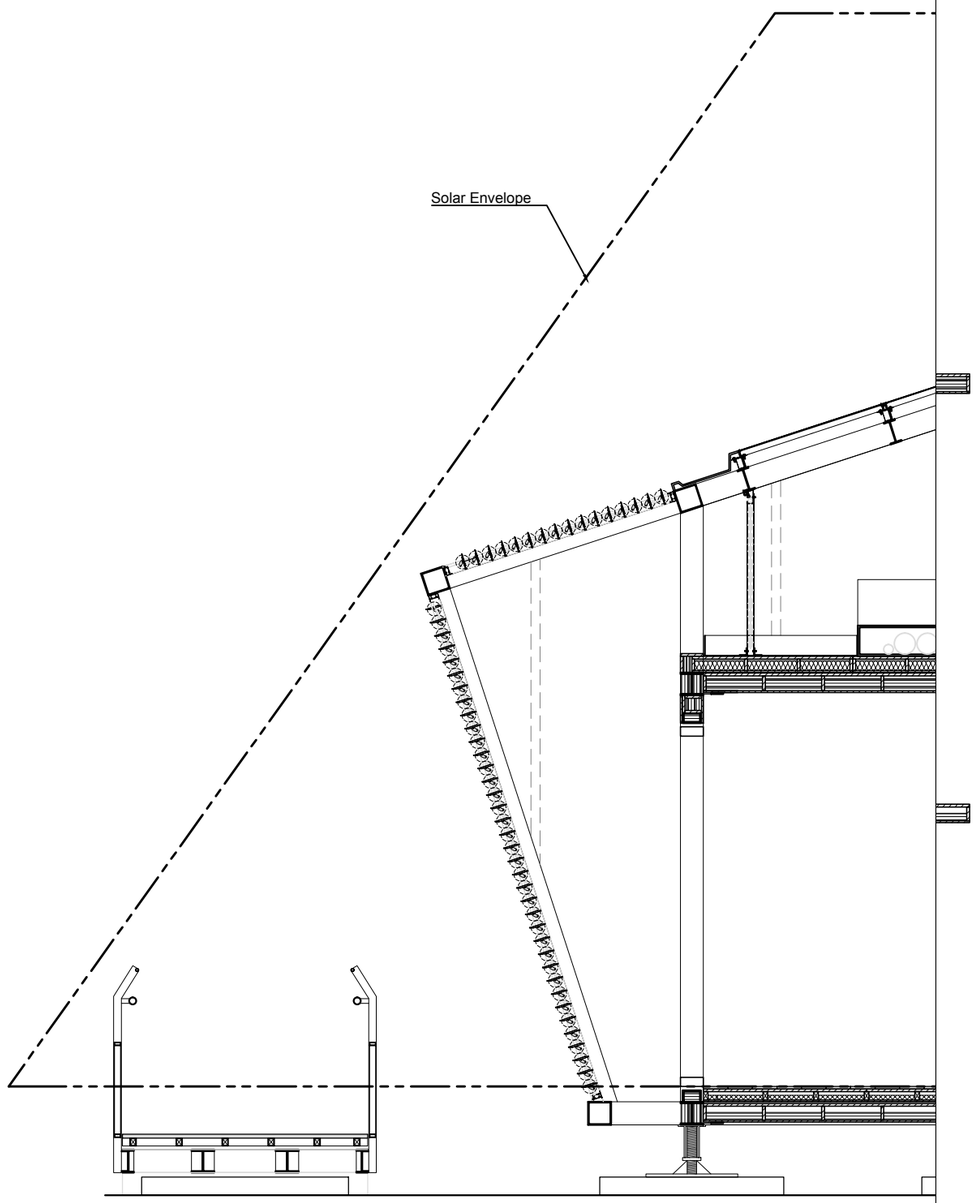

Louvers Open

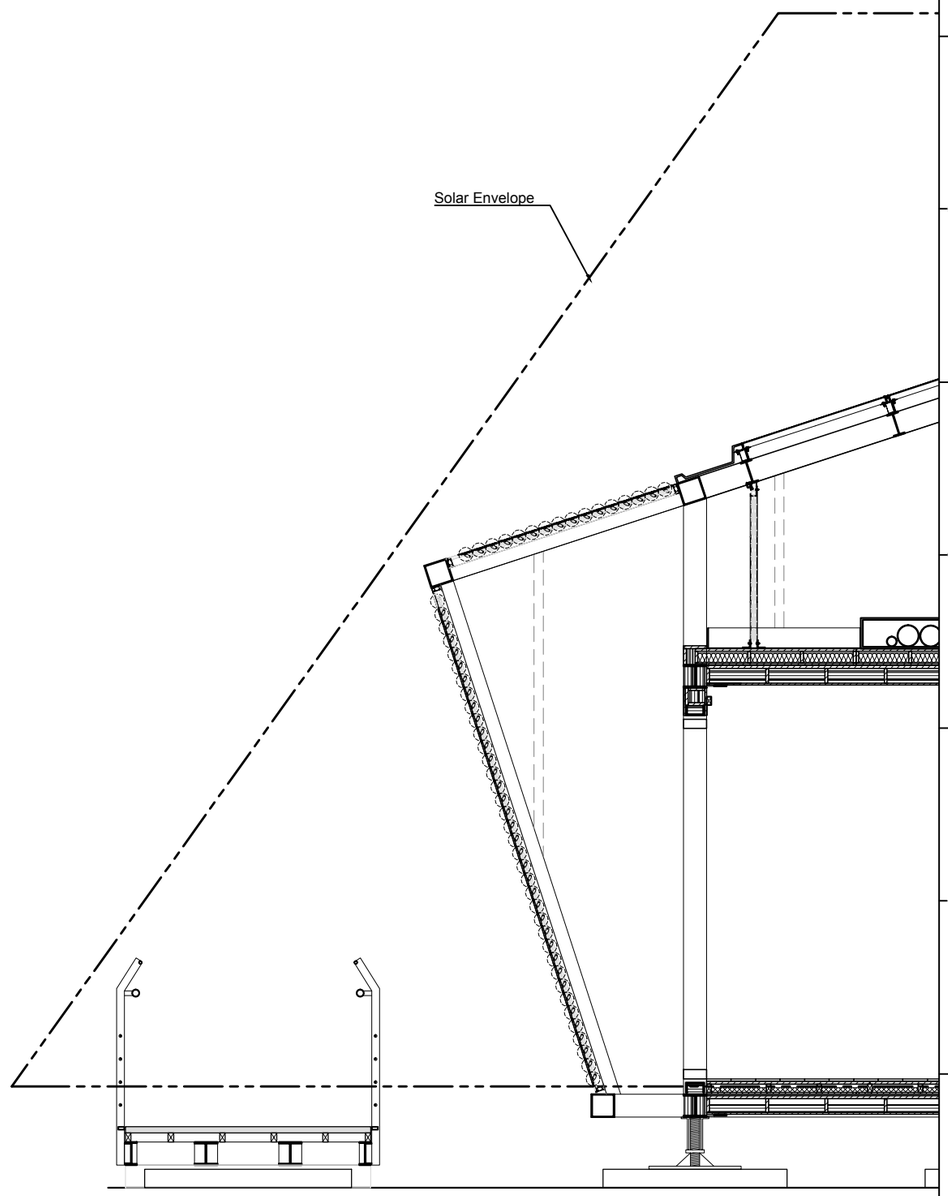

0 0.5 1 2 METER

Louvers Closed

Solar Decathlon Europe

Project: ORCHID HOUSE

Institution: 國立交通大學 National Chiao Tung University

NCTU Architecture 國立交通大學建築研究所

Team Name: NCTU/UNICODE

Address: 1001 Ta-Hsueh Road
Hsinchu City 30010
Taiwan

Contact: www.sde.tw

Consultants:

Note:

Mark	Date	Description
DN	2013/04/01	SD Submission
DN	2013/07/01	DDc Submission
ST	2013/11/01	DD Submission
ST	2014/03/03	CD Submission
ST	2014/04/30	CD Submission
ST	2014/06/02	CD Submission

Drawn by	CH
Checked by	DN
Scale	1:40
Unit	mm

DWG. Title

RECONFIGURABLE FEATURES 4

DWG. No. AR-044

PAGE 25

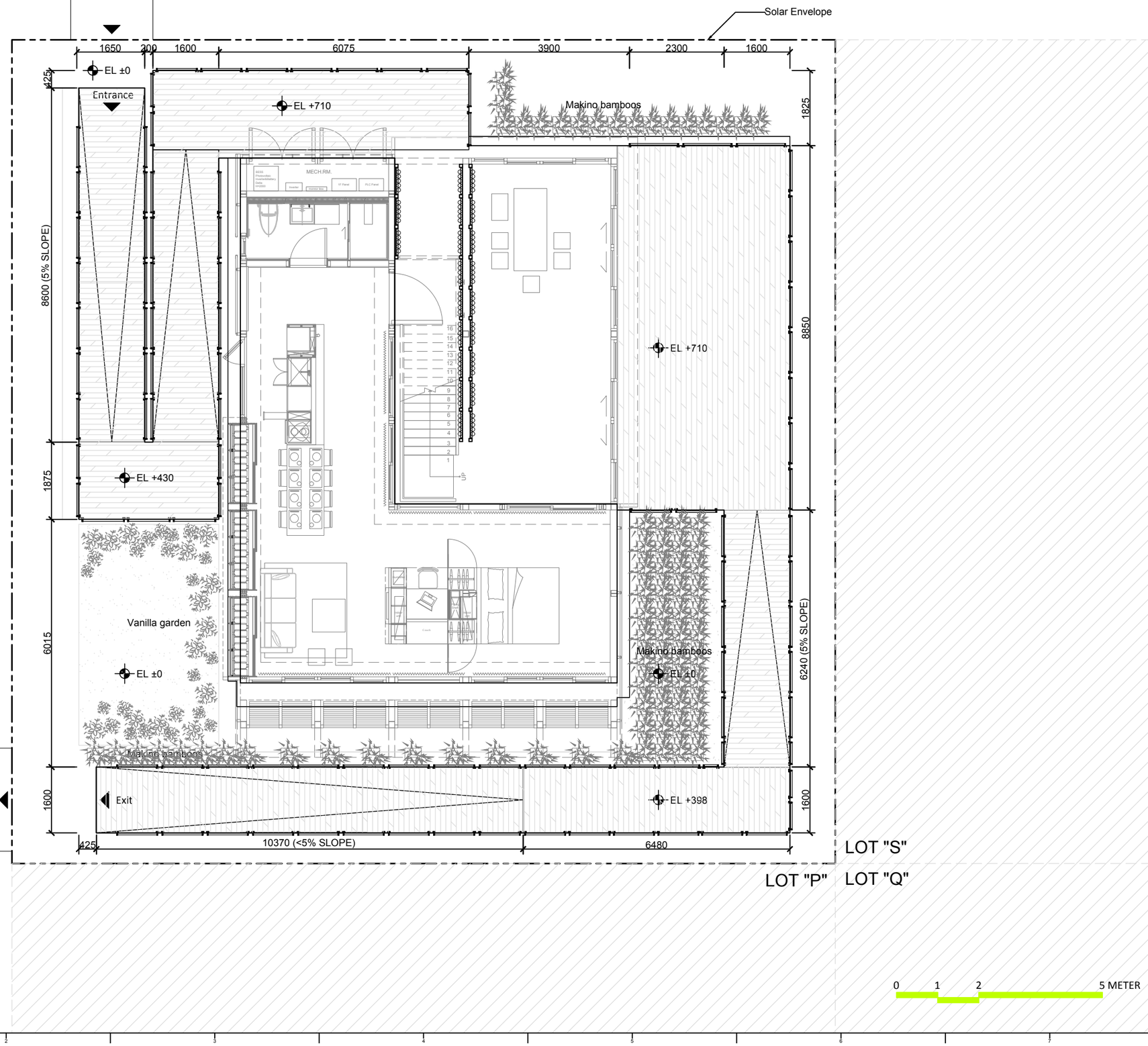

Solar Decathlon Europe

Project: ORCHID HOUSE

Institution: 國立交通大學 National Chiao Tung University

NCTU Architecture 國立交通大學建築研究所

Team Name: NCTU/UNICODE

Address: 1001 Ta-Hsueh Road
Hsinchu City 30010
Taiwan

Contact: www.sde.tw

Consultants:

Note:

Mark	Date	Description
DN	2013/04/01	SD Submission
DN	2013/07/01	DDc Submission
ST	2013/11/01	DD Submission
ST	2014/03/03	CD Submission
ST	2014/04/30	CD Submission
ST	2014/06/02	CD Submission

Drawn by	CF
Checked by	DN
Scale	1:100
Unit	mm

DWG. Title

SITE ENTRANCE AND EXIT

DWG. No. AR-051

PAGE 26

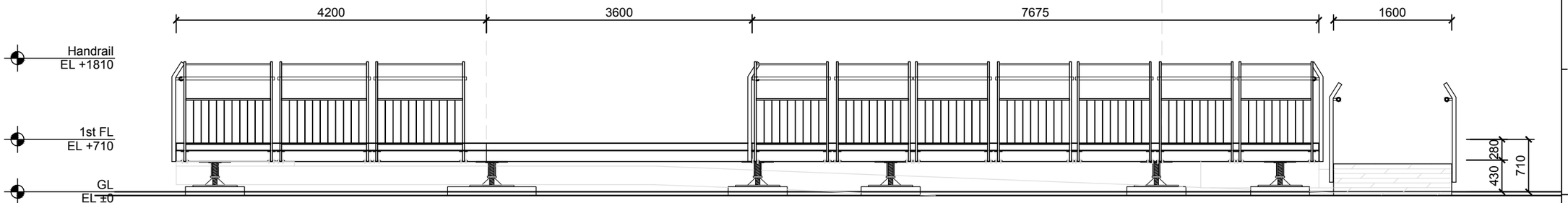

North

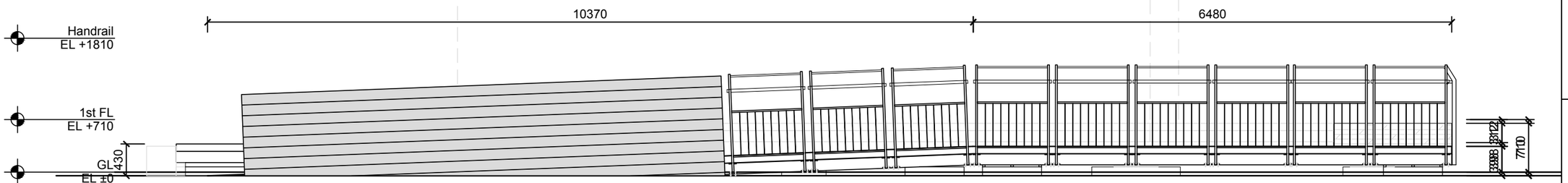

South

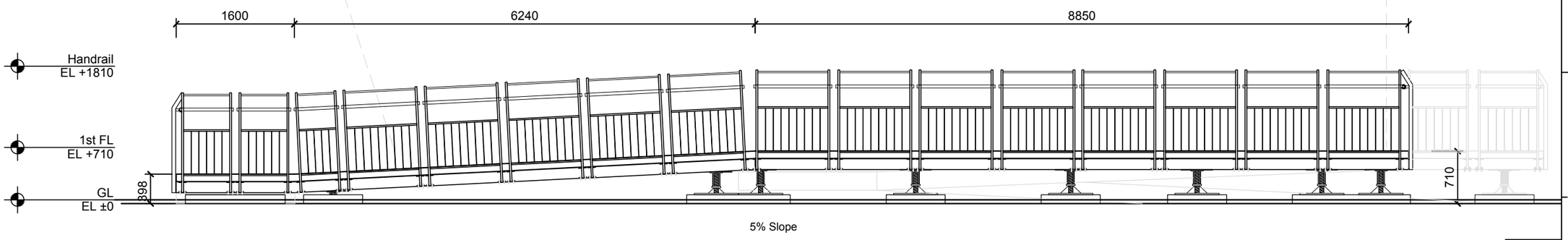

East

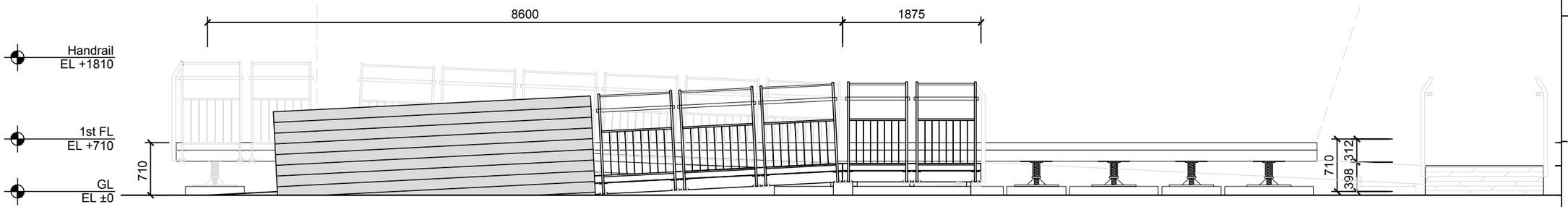

West

Solar Decathlon Europe

Project: ORCHID HOUSE

Institution: 國立交通大學 National Chiao Tung University

NCTU Architecture 國立交通大學建築研究所

Team Name: NCTU/UNICODE

Address: 1001 Ta-Hsueh Road
Hsinchu City 30010
Taiwan

Contact: www.sde.tw

Consultants:

Note:

Mark	Date	Description
DN	2013/04/01	SD Submission
DN	2013/07/01	DDc Submission
ST	2013/11/01	DD Submission
ST	2014/03/03	CD Submission
ST	2014/04/30	CD Submission
ST	2014/06/02	CD Submission

Drawn by	CF
Checked by	ST
Scale	1:60
Unit	mm

DWG. Title: SITE ELEVATION

DWG. No. AR-101

PAGE 27

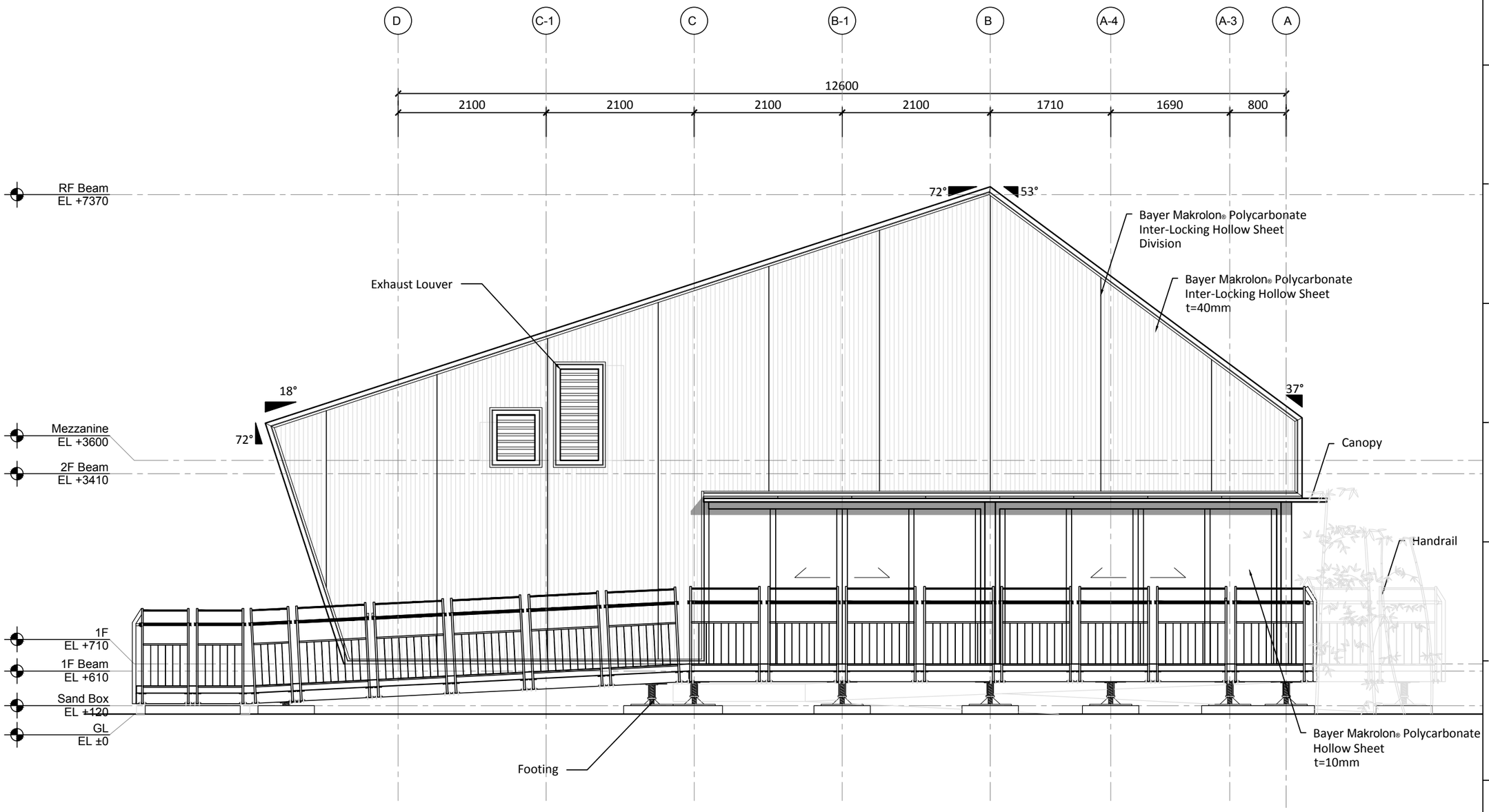

0 1 2 5 METER

Solar Decathlon Europe

Project: ORCHID HOUSE

Institution: 國立交通大學 National Chiao Tung University

NCTU Architecture 國立交通大學建築研究所

Team Name: NCTU/UNICODE

Address: 1001 Ta-Hsueh Road
Hsinchu City 30010
Taiwan

Contact: www.sde.tw

Consultants:

Note:

Mark	Date	Description
DN	2013/04/01	SD Submission
DN	2013/07/01	DDc Submission
ST	2013/11/01	DD Submission
ST	2014/03/03	CD Submission
ST	2014/04/30	CD Submission
ST	2014/06/02	CD Submission

Drawn by	CF
Checked by	DN
Scale	1:60
Unit	mm

DWG. Title

EAST ELEVATION

DWG. No. AR-111

PAGE 28

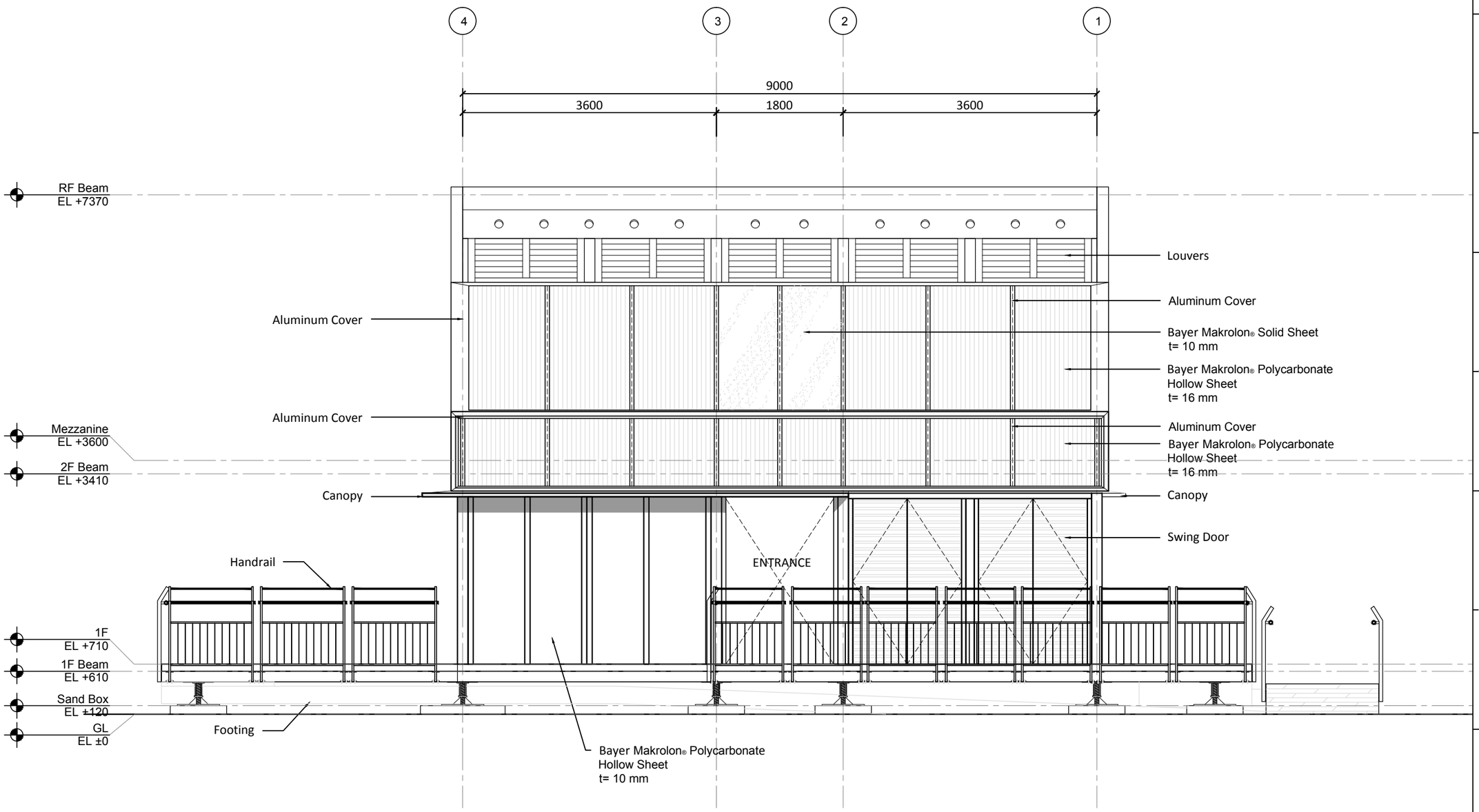

0 1 2 5 METER

Solar Decathlon Europe

Project: ORCHID HOUSE

Institution: 國立交通大學 National Chiao Tung University

NCTU Architecture 國立交通大學建築研究所

Team Name: NCTU/UNICODE

Address: 1001 Ta-Hsueh Road
Hsinchu City 30010
Taiwan

Contact: www.sde.tw

Consultants:

Note:

Mark	Date	Description
DN	2013/04/01	SD Submission
DN	2013/07/01	DDc Submission
ST	2013/11/01	DD Submission
ST	2014/03/03	CD Submission
ST	2014/04/30	CD Submission
ST	2014/06/02	CD Submission

Drawn by	CF
Checked by	DN
Scale	1:60
Unit	mm

DWG. Title

NORTH ELEVATION

DWG. No. AR-112

PAGE 29

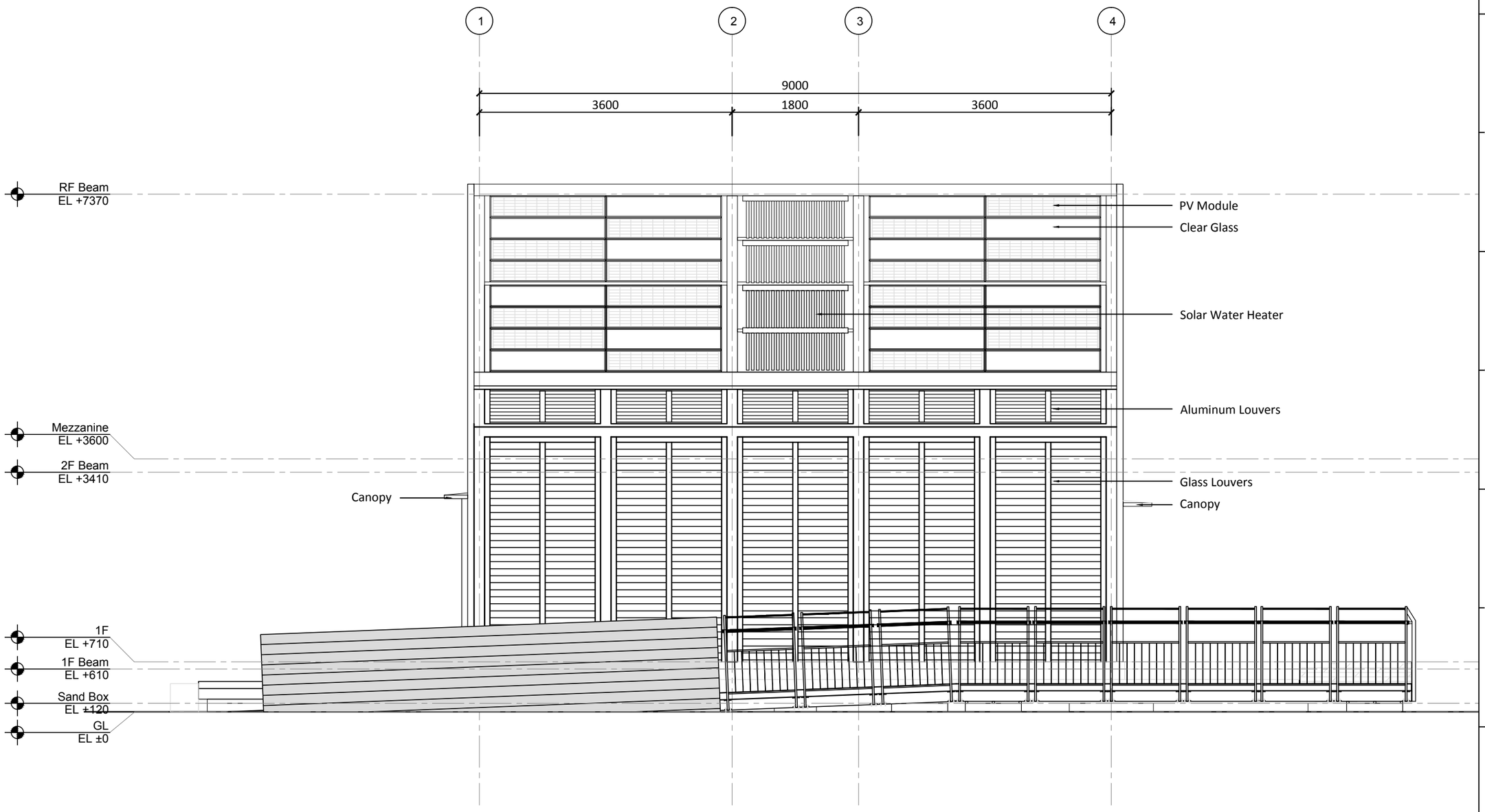

0 1 2 5 METER

Solar Decathlon Europe

Project: ORCHID HOUSE

Institution: 國立交通大學 National Chiao Tung University

NCTU Architecture 國立交通大學建築研究所

Team Name: NCTU/UNICODE

Address: 1001 Ta-Hsueh Road
Hsinchu City 30010
Taiwan

Contact: www.sde.tw

Consultants:

Note:

Mark	Date	Description
DN	2013/04/01	SD Submission
DN	2013/07/01	DDc Submission
ST	2013/11/01	DD Submission
ST	2014/03/03	CD Submission
ST	2014/04/30	CD Submission
ST	2014/06/02	CD Submission

Drawn by	CF
Checked by	DN
Scale	1:60
Unit	mm

DWG. Title

SOUTH ELEVATION

DWG. No. AR-113

PAGE 30

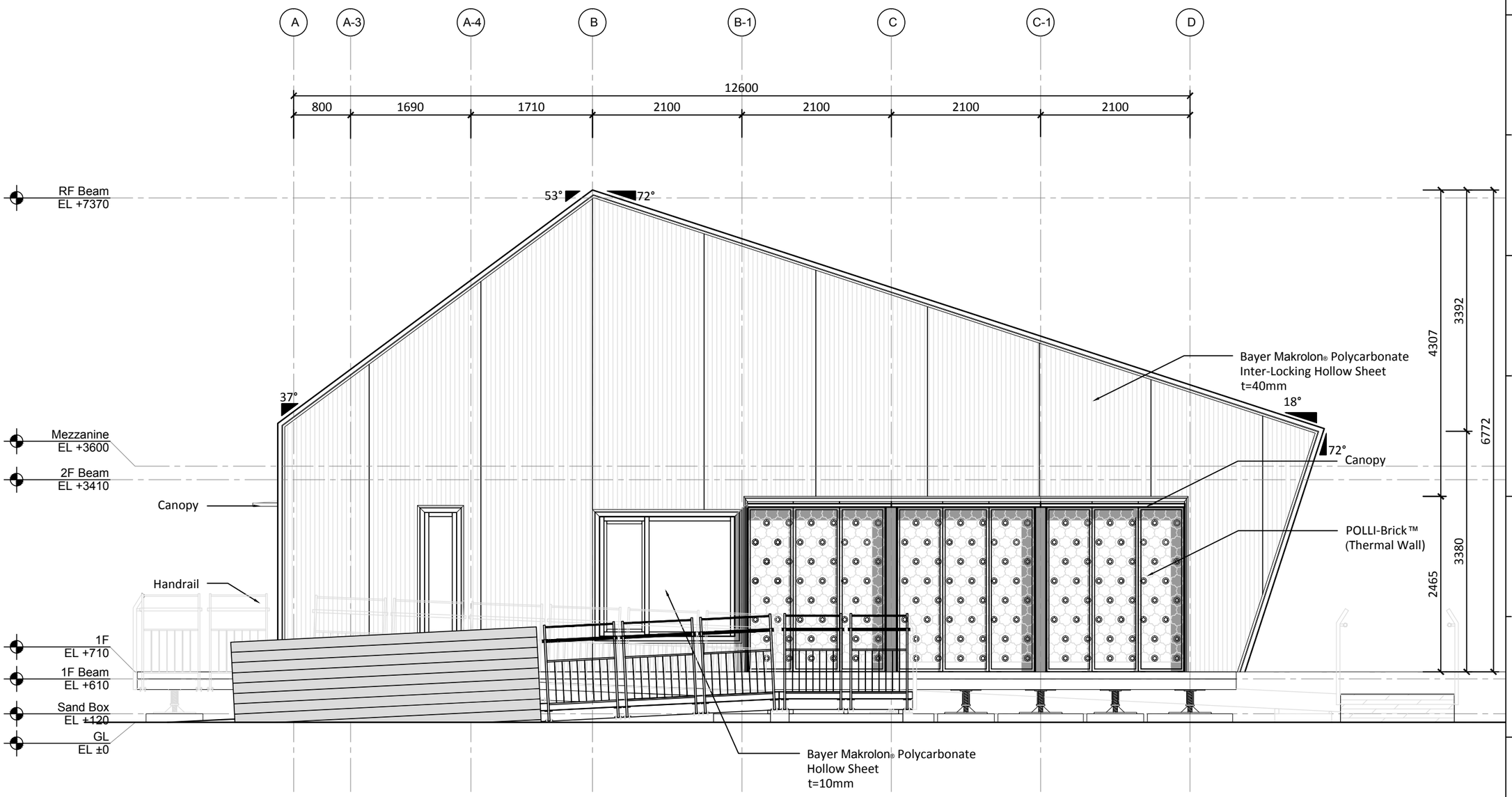

Solar Decathlon Europe

Project:

ORCHID HOUSE

Institution:

國立交通大學
National Chiao Tung University

NCTU Architecture
國立交通大學建築研究所

Team Name: NCTU/UNICODE

Address: 1001 Ta-Hsueh Road
Hsinchu City 30010
Taiwan

Contact: www.sde.tw

Consultants:

Note:

Mark	Date	Description
DN	2013/04/01	SD Submission
DN	2013/07/01	DDc Submission
ST	2013/11/01	DD Submission
ST	2014/03/03	CD Submission
ST	2014/04/30	CD Submission
ST	2014/06/02	CD Submission

Drawn by	CF
Checked by	DN
Scale	1:60
Unit	mm

DWG. Title

WEST ELEVATION

DWG. No. AR-114

PAGE 31

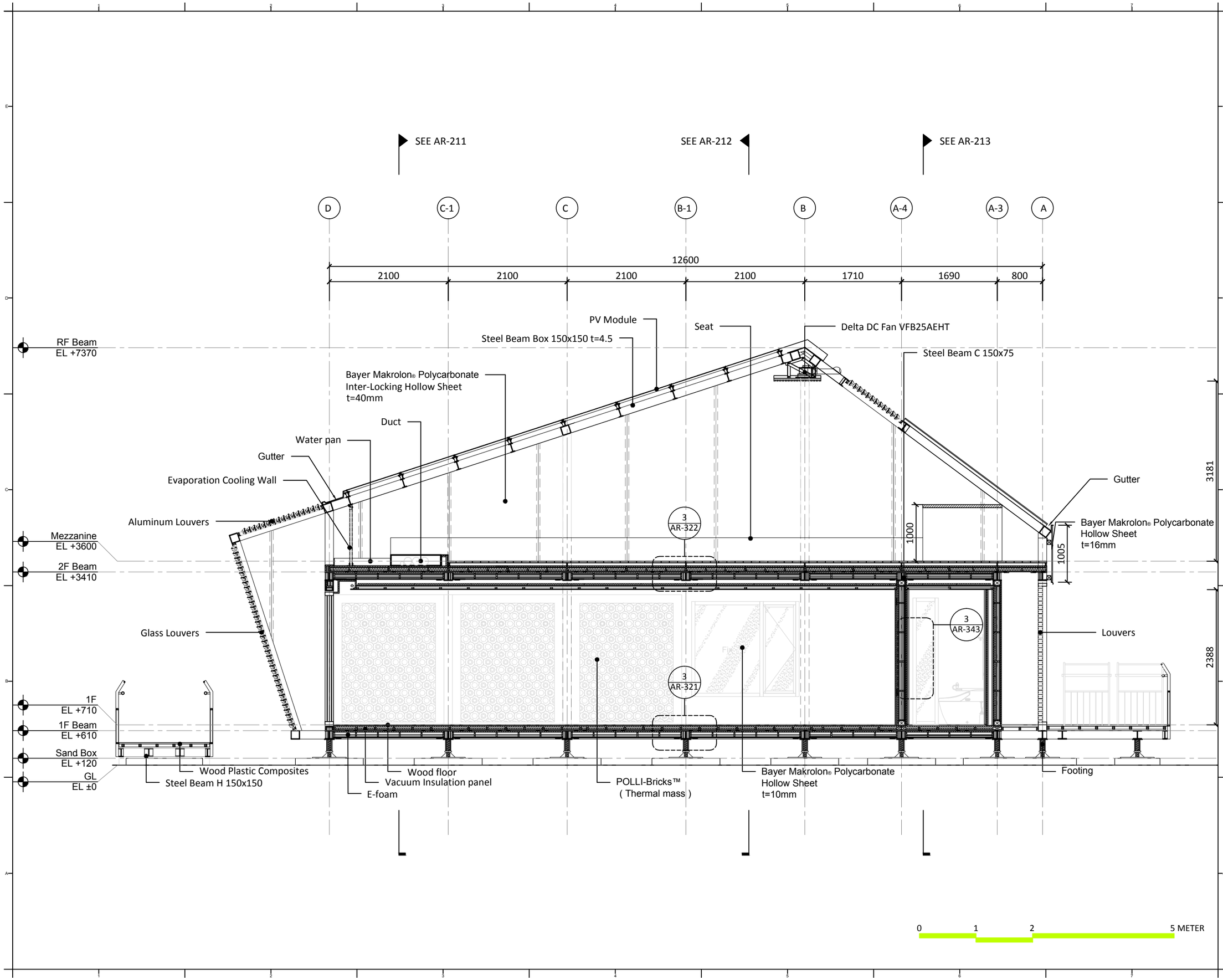

Solar Decathlon Europe

Project:

ORCHID HOUSE

Institution:

國立交通大學 National Chiao Tung University

NCTU Architecture
國立交通大學建築研究所

Team Name: NCTU/UNICODE

Address: 1001 Ta-Hsueh Road
Hsinchu City 30010
Taiwan

Contact: www.sde.tw

Consultants:

Note:

Mark	Date	Description
DN	2013/04/01	SD Submission
DN	2013/07/01	DDc Submission
ST	2013/11/01	DD Submission
ST	2014/03/03	CD Submission
ST	2014/04/30	CD Submission
ST	2014/06/02	CD Submission

Drawn by	CF
Checked by	DN
Scale	1:60
Unit	mm

DWG. Title

LONGITUDINAL SECTION
1

DWG. No. AR-201

PAGE 32

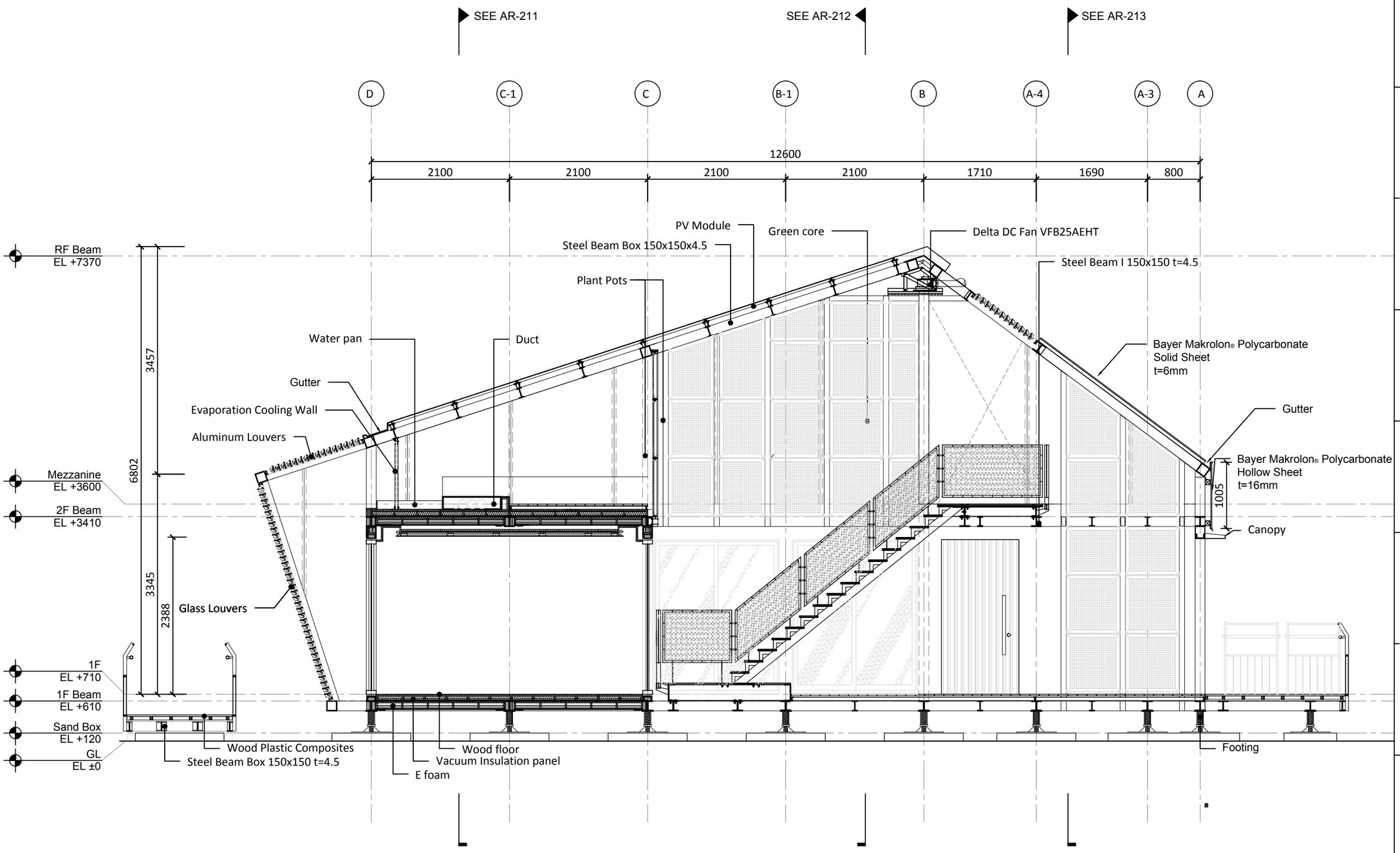

Solar Decathlon Europe

Project:

ORCHID HOUSE

Institution:

國立交通大學 National Chiao Tung University

NCTU Architecture
國立交通大學建築研究所

Team Name: NCTU/UNICODE

Address: 1001 Ta-Hsueh Road
Hsinchu City 30010
Taiwan

Contact: www.sde.tw

Consultants:

Note:

Mark	Date	Description
DN	2013/04/01	SD Submission
DN	2013/07/01	DDc Submission
ST	2013/11/01	DD Submission
ST	2014/03/03	CD Submission
ST	2014/04/30	CD Submission
ST	2014/06/02	CD Submission

Drawn by	CF
Checked by	DN
Scale	1:60
Unit	mm

DWG. Title

LONGITUDINAL SECTION 2

DWG. No. AR-202

PAGE 33

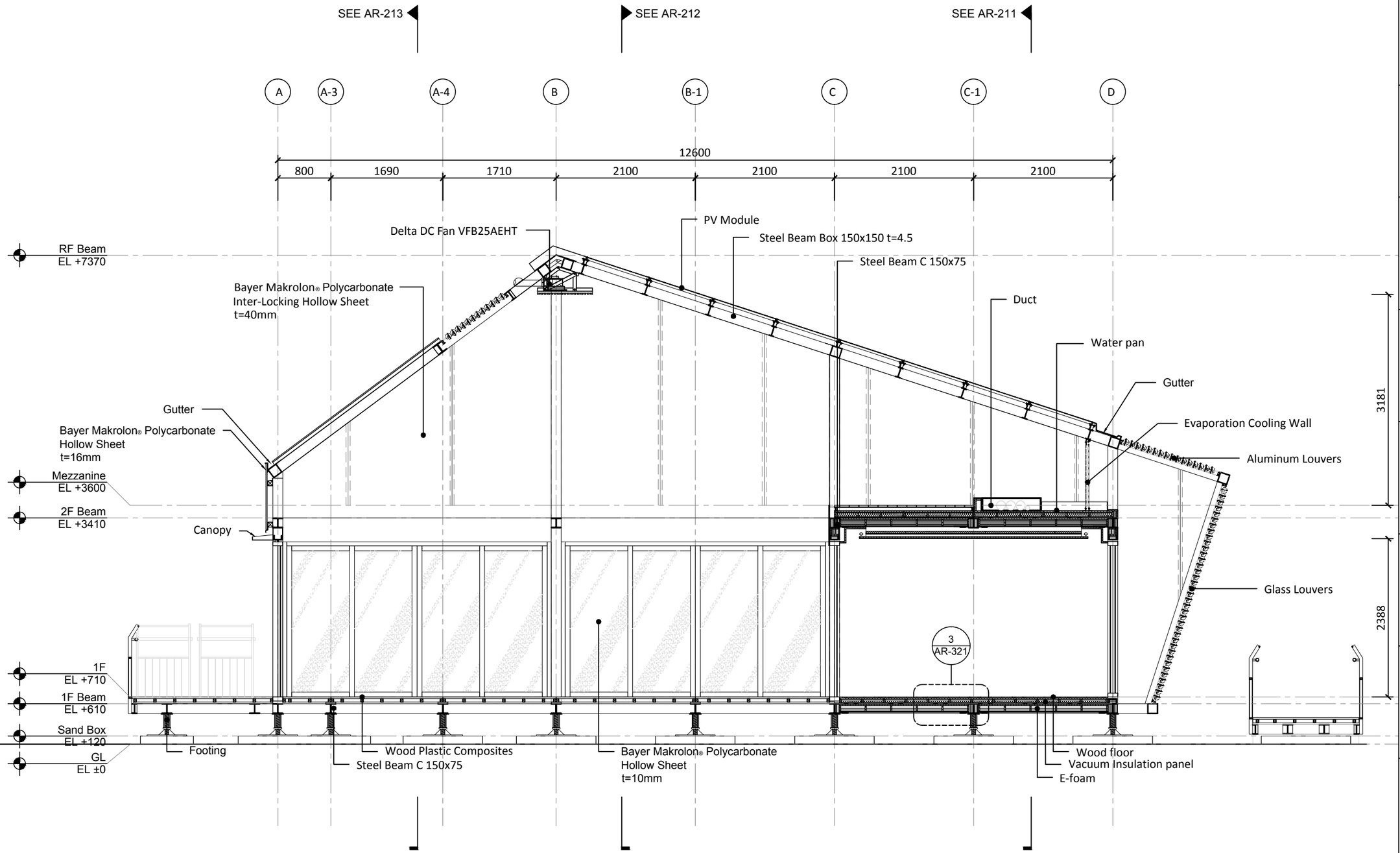

Solar Decathlon Europe

Project: ORCHID HOUSE

Institution: 國立交通大學 National Chiao Tung University

NCTU Architecture 國立交通大學建築研究所

Team Name: NCTU/UNICODE

Address: 1001 Ta-Hsueh Road
Hsinchu City 30010
Taiwan

Contact: www.sde.tw

Consultants:

Note:

Mark	Date	Description
DN	2013/04/01	SD Submission
DN	2013/07/01	DDc Submission
ST	2013/11/01	DD Submission
ST	2014/03/03	CD Submission
ST	2014/04/30	CD Submission
ST	2014/06/02	CD Submission

Drawn by	CF
Checked by	DN
Scale	1:60
Unit	mm

DWG. Title

LONGITUDINAL SECTION 3

DWG. No. AR-203

PAGE 34

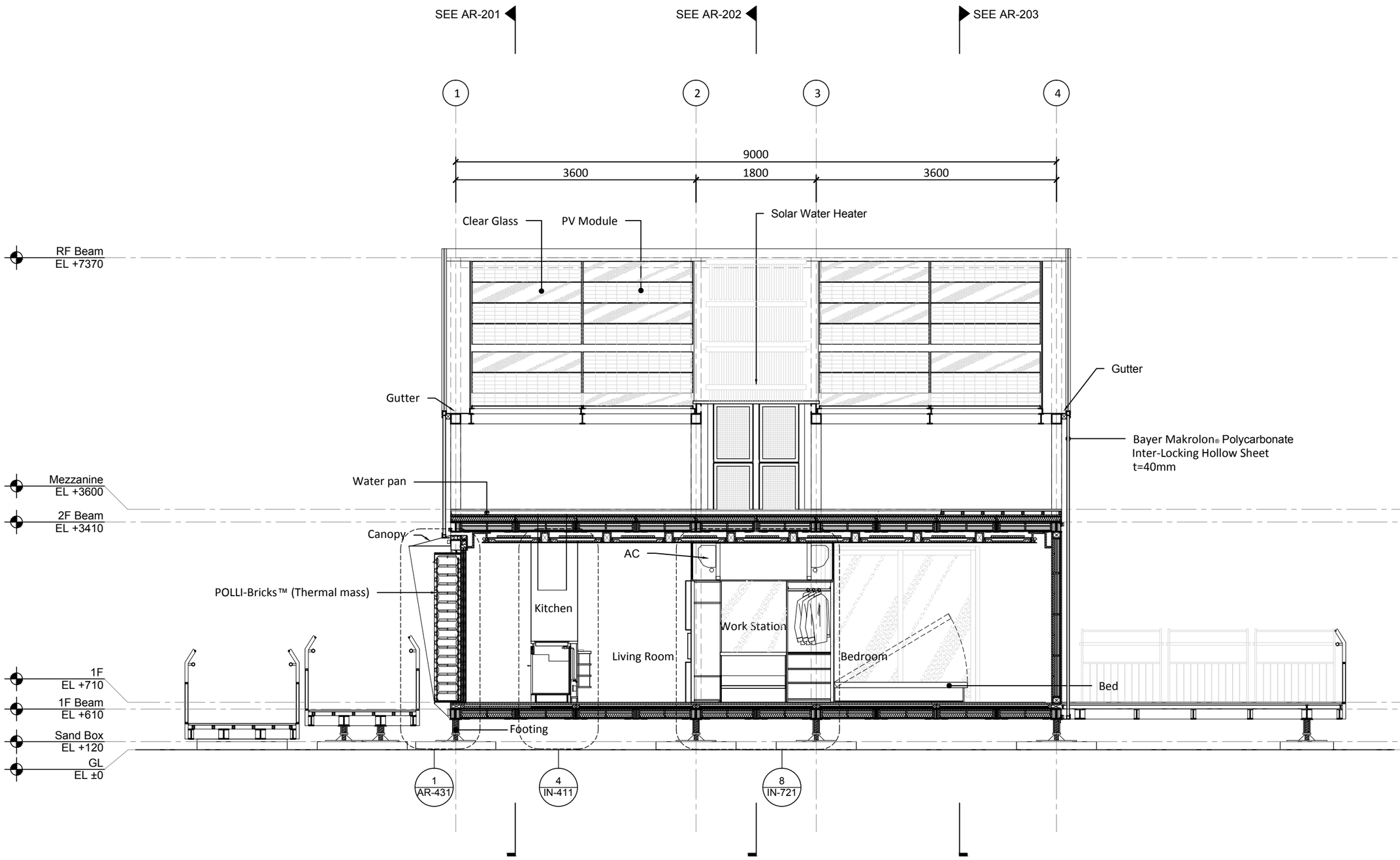

0 1 2 5 METER

Solar Decathlon Europe

Project: ORCHID HOUSE

Institution: 國立交通大學 National Chiao Tung University

NCTU Architecture 國立交通大學建築研究所

Team Name: NCTU/UNICODE

Address: 1001 Ta-Hsueh Road
Hsinchu City 30010
Taiwan

Contact: www.sde.tw

Consultants:

Note:

Mark	Date	Description
DN	2013/04/01	SD Submission
DN	2013/07/01	DDc Submission
ST	2013/11/01	DD Submission
ST	2014/03/03	CD Submission
ST	2014/04/30	CD Submission
ST	2014/06/02	CD Submission

Drawn by	CF
Checked by	DN
Scale	1:60
Unit	mm

DWG. Title

TRANSVERSAL SECTIONS 1

DWG. No. AR-211

PAGE 35

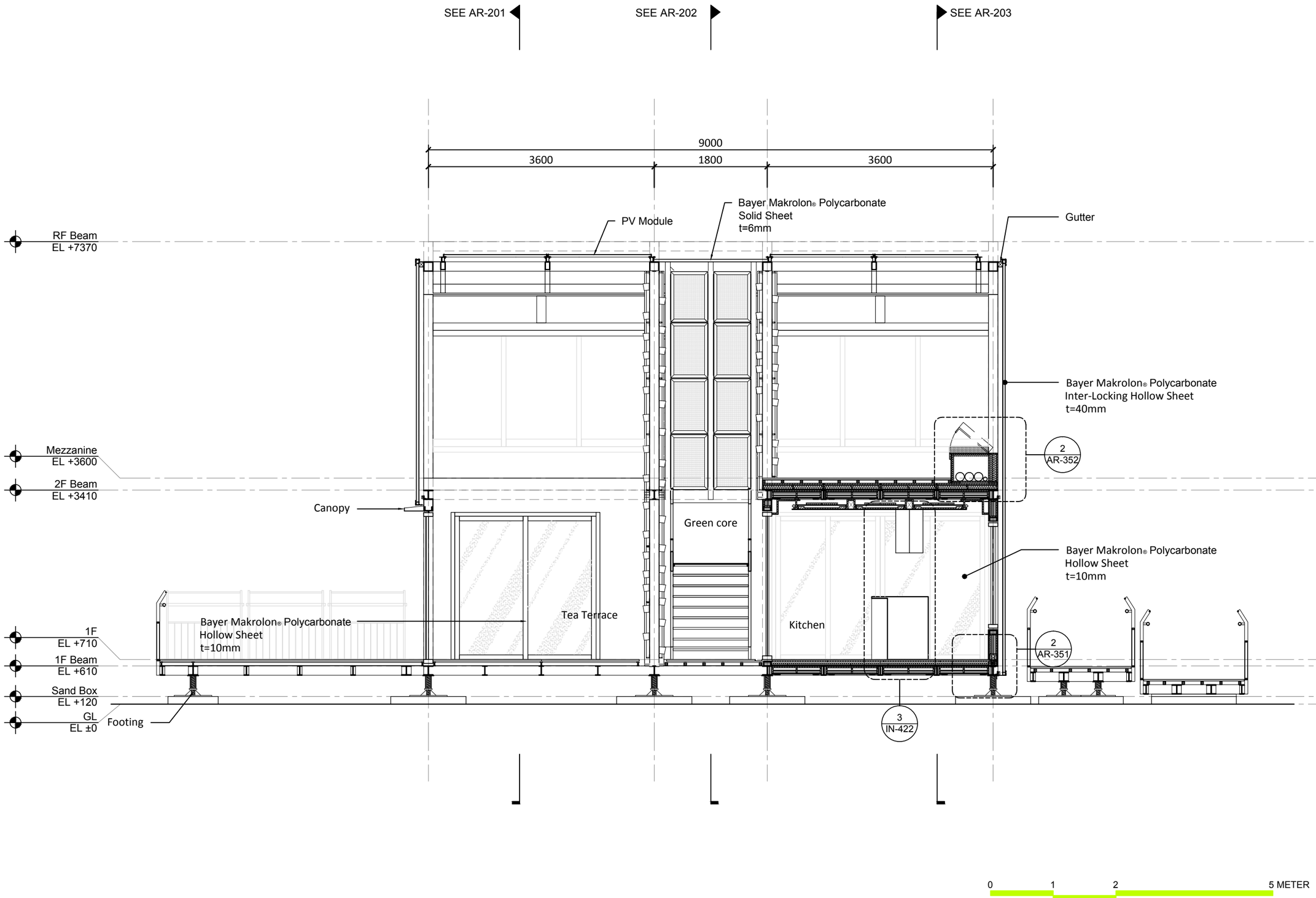

Solar Decathlon Europe

Project:

ORCHID HOUSE

Institution:

國立交通大學
National Chiao Tung University

NCTU Architecture
國立交通大學建築研究所

Team Name:	NCTU/UNICODE
Address:	1001 Ta-Hsueh Road Hsinchu City 30010 Taiwan
Contact:	www.sde.tw

Consultants:

Note:

Mark	Date	Description
DN	2013/04/01	SD Submission
DN	2013/07/01	DDc Submission
ST	2013/11/01	DD Submission
ST	2014/03/03	CD Submission
ST	2014/04/30	CD Submission
ST	2014/06/02	CD Submission

Drawn by	CF
Checked by	DN
Scale	1:60
Unit	mm

DWG. Title

TRANSVERSAL SECTIONS 2

DWG. No.	PAGE
AR-212	36

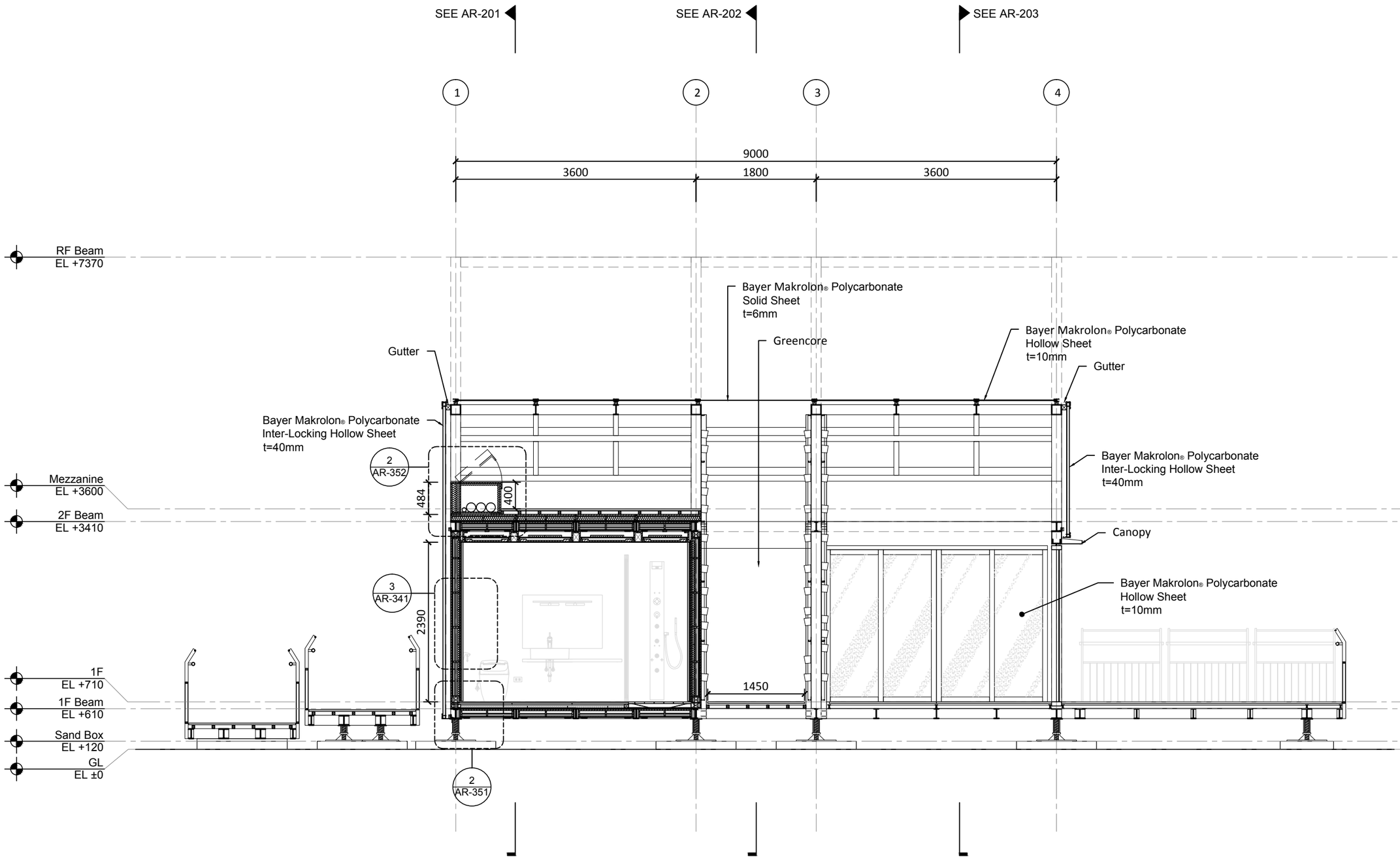

Solar Decathlon Europe

Project:

ORCHID HOUSE

Institution:

國立交通大學
National Chiao Tung University

NCTU Architecture
國立交通大學建築研究所

Team Name: NCTU/UNICODE

Address: 1001 Ta-Hsueh Road
Hsinchu City 30010
Taiwan

Contact: www.sde.tw

Consultants:

Note:

Mark	Date	Description
DN	2013/04/01	SD Submission
DN	2013/07/01	DDc Submission
ST	2013/11/01	DD Submission
ST	2014/03/03	CD Submission
ST	2014/04/30	CD Submission
ST	2014/06/02	CD Submission

Drawn by	CF
Checked by	DN
Scale	1:60
Unit	mm

DWG. Title

TRANSVERSAL SECTIONS
3

DWG. No. AR-213

PAGE 37

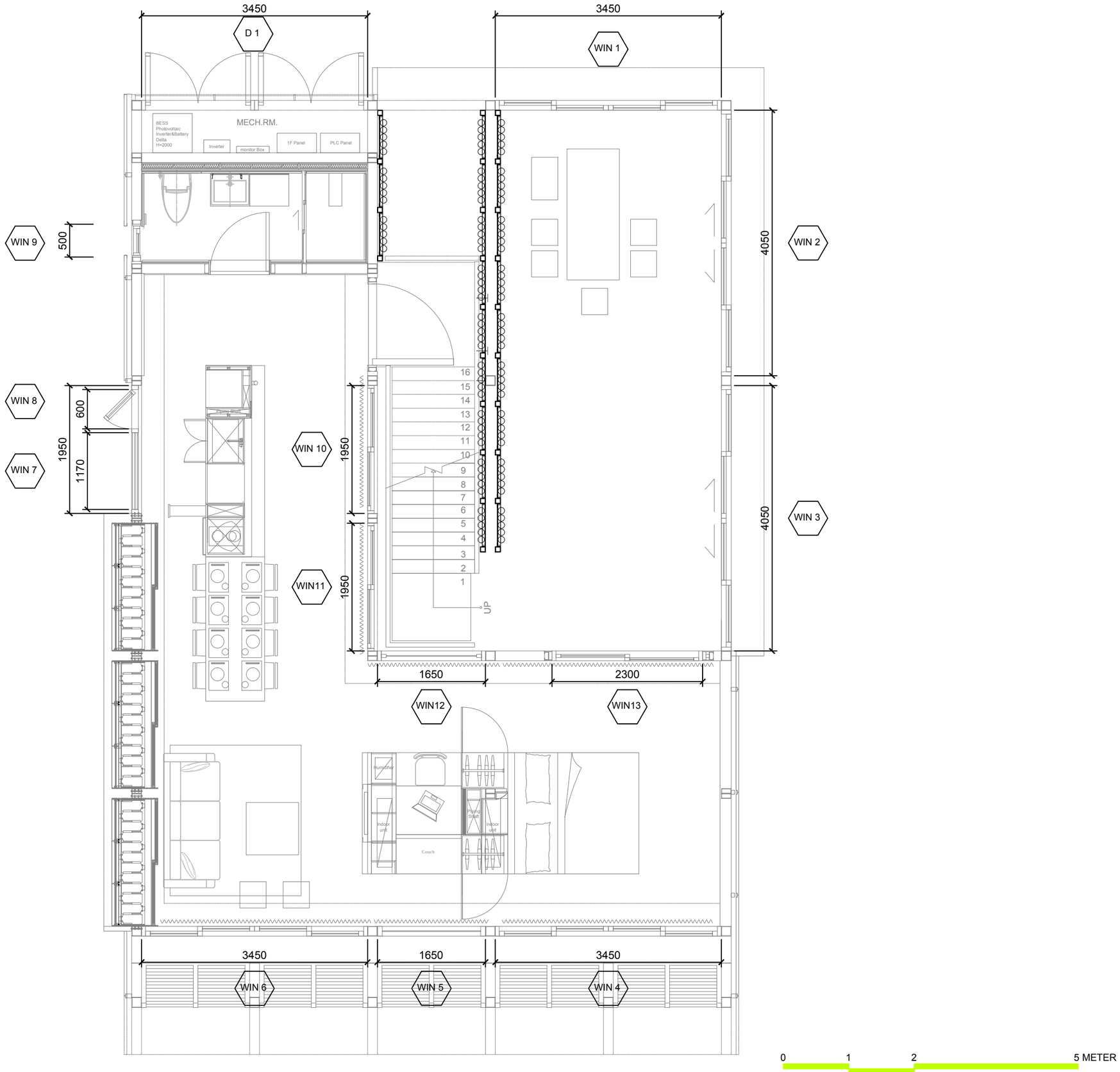

Solar Decathlon Europe

Project:

ORCHID HOUSE

Institution:

國立交通大學 National Chiao Tung University

NCTU Architecture 國立交通大學建築研究所

Team Name: NCTU/UNICODE

Address: 1001 Ta-Hsueh Road
Hsinchu City 30010
Taiwan

Contact: www.sde.tw

Consultants:

Note:

Mark	Date	Description
DN	2013/04/01	SD Submission
DN	2013/07/01	DDc Submission
ST	2013/11/01	DD Submission
ST	2014/03/03	CD Submission
ST	2014/04/30	CD Submission
ST	2014/06/02	CD Submission

Drawn by	CF
Checked by	DN
Scale	1:60
Unit	mm

DWG. Title

WINDOW SCHEDULE AND DETAILS 1

DWG. No. AR-301

PAGE 38

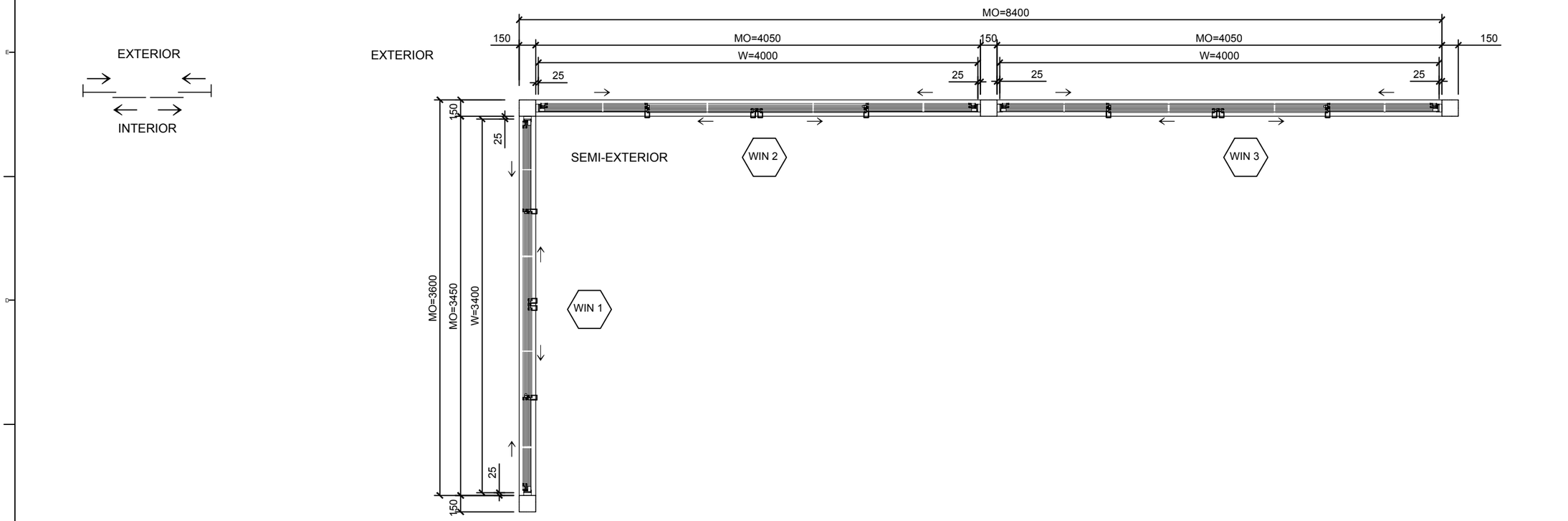

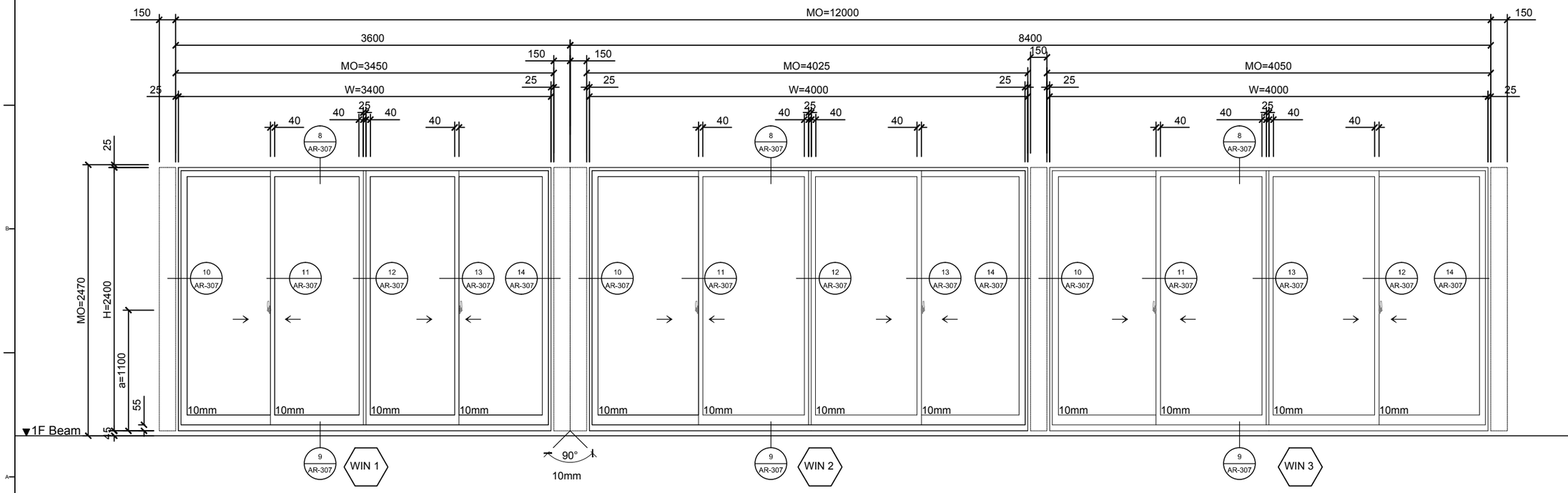

0 0.5 1 2 METER

Solar Decathlon Europe

Project: ORCHID HOUSE

Institution: 國立交通大學 National Chiao Tung University

NCTU Architecture 國立交通大學建築研究所

Team Name:	NCTU/UNICODE
Address:	1001 Ta-Hsueh Road Hsinchu City 30010 Taiwan
Contact:	www.sde.tw

Consultants:

Note:

Mark	Date	Description
DN	2013/04/01	SD Submission
DN	2013/07/01	DDc Submission
ST	2013/11/01	DD Submission
ST	2014/03/03	CD Submission
ST	2014/04/30	CD Submission
ST	2014/06/02	CD Submission

Drawn by	CF
Checked by	DN
Scale	1:40
Unit	mm

DWG. Title

WINDOW SCHEDULE AND DETAILS 2

DWG. No. AR-302

PAGE 39

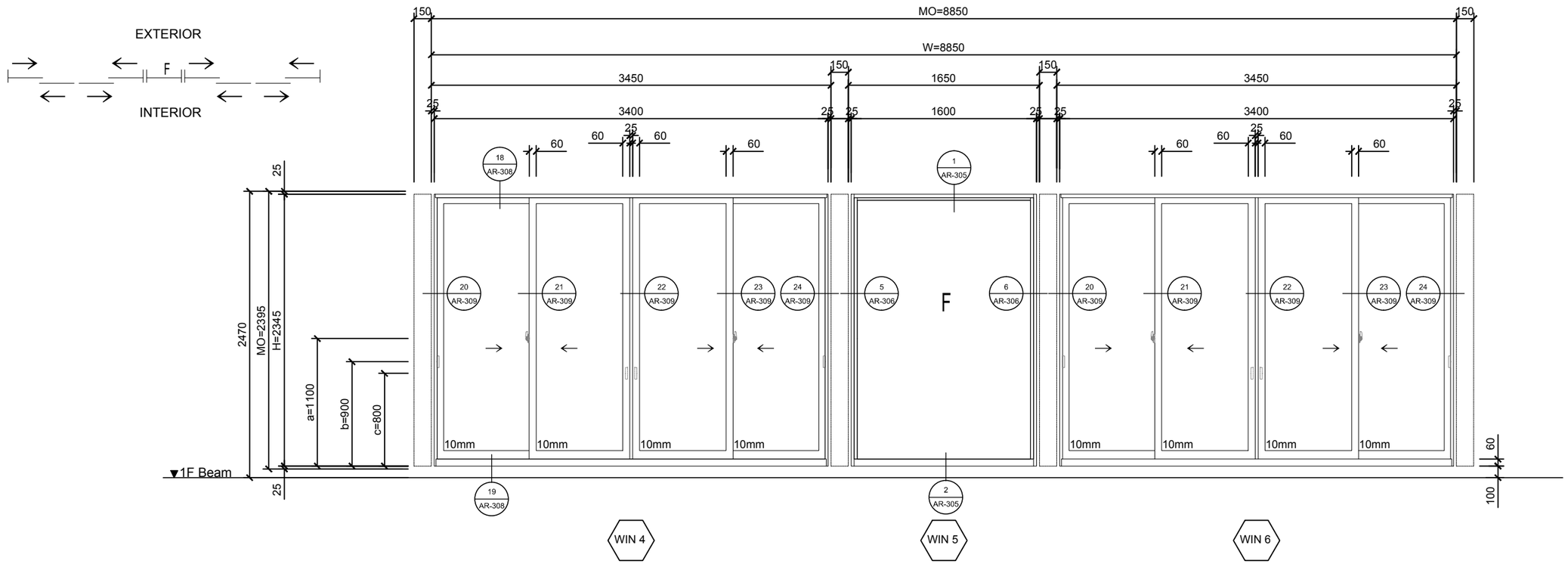

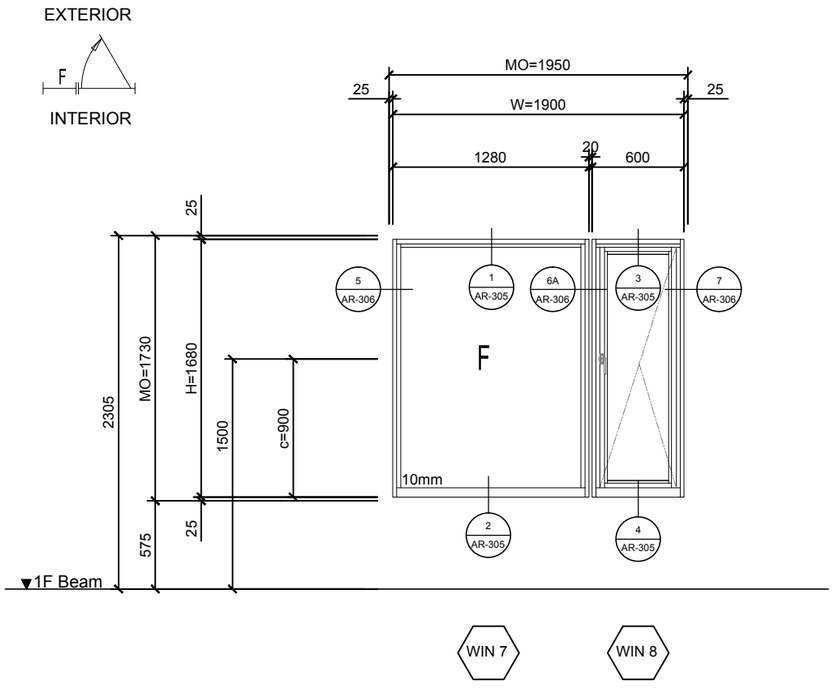

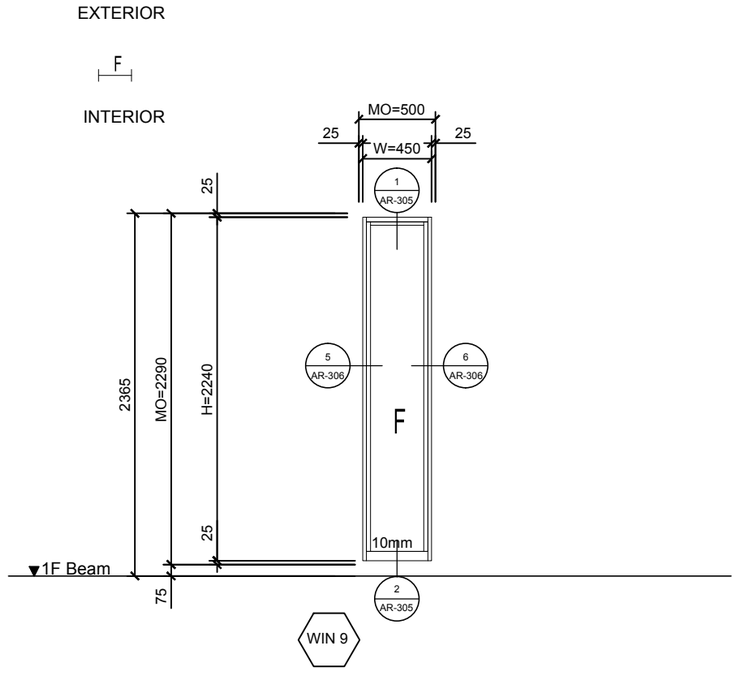

0 0.5 1 2 METER

Solar Decathlon Europe

Project: ORCHID HOUSE

Institution: 國立交通大學 National Chiao Tung University

NCTU Architecture 國立交通大學建築研究所

Team Name: NCTU/UNICODE
Address: 1001 Ta-Hsueh Road Hsinchu City 30010 Taiwan
Contact: www.sde.tw

Consultants:

Note:

Mark	Date	Description
DN	2013/04/01	SD Submission
DN	2013/07/01	DDc Submission
ST	2013/11/01	DD Submission
ST	2014/03/03	CD Submission
ST	2014/04/30	CD Submission
ST	2014/06/02	CD Submission

Drawn by	CF
Checked by	DN
Scale	1:40
Unit	mm

DWG. Title: WINDOW SCHEDULE AND DETAILS 3

DWG. No. AR-303

PAGE 40

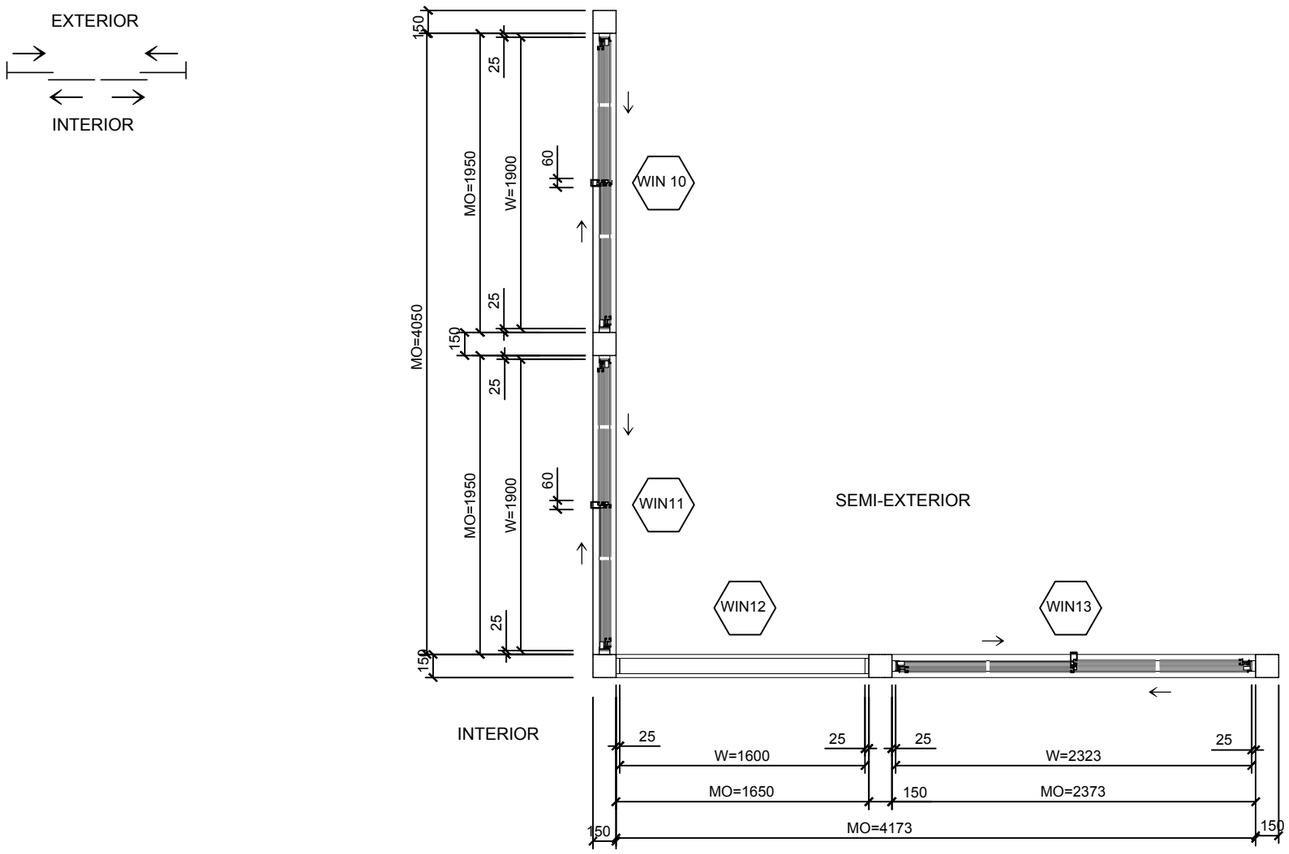

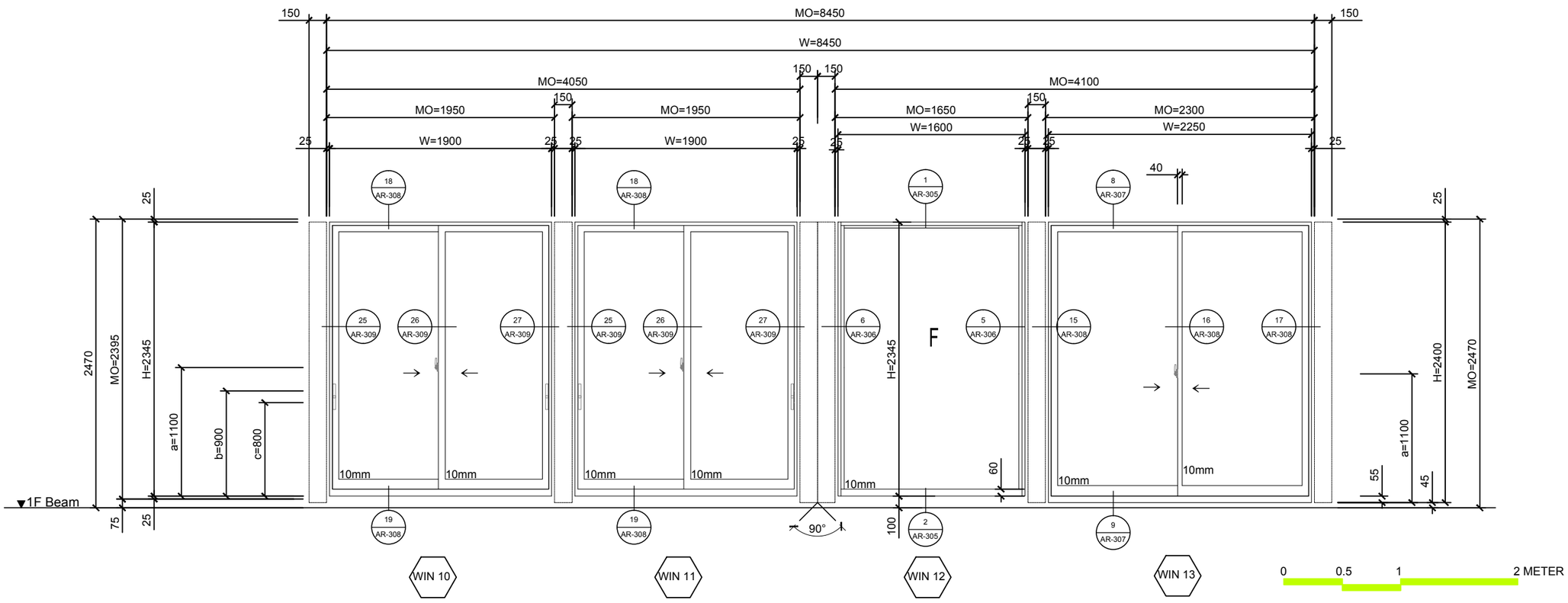

Solar Decathlon Europe

Project: ORCHID HOUSE

Institution: 國立交通大學 National Chiao Tung University

NCTU Architecture 國立交通大學建築研究所

Team Name: NCTU/UNICODE

Address: 1001 Ta-Hsueh Road, Hsinchu City 30010, Taiwan

Contact: www.sde.tw

Consultants:

Note:

Mark	Date	Description
DN	2013/04/01	SD Submission
DN	2013/07/01	DDc Submission
ST	2013/11/01	DD Submission
ST	2014/03/03	CD Submission
ST	2014/04/30	CD Submission
ST	2014/06/02	CD Submission

Drawn by	CF
Checked by	DN
Scale	1:40
Unit	mm

DWG. Title: WINDOW SCHEDULE AND DETAILS 4

DWG. No. AR-304

PAGE 41

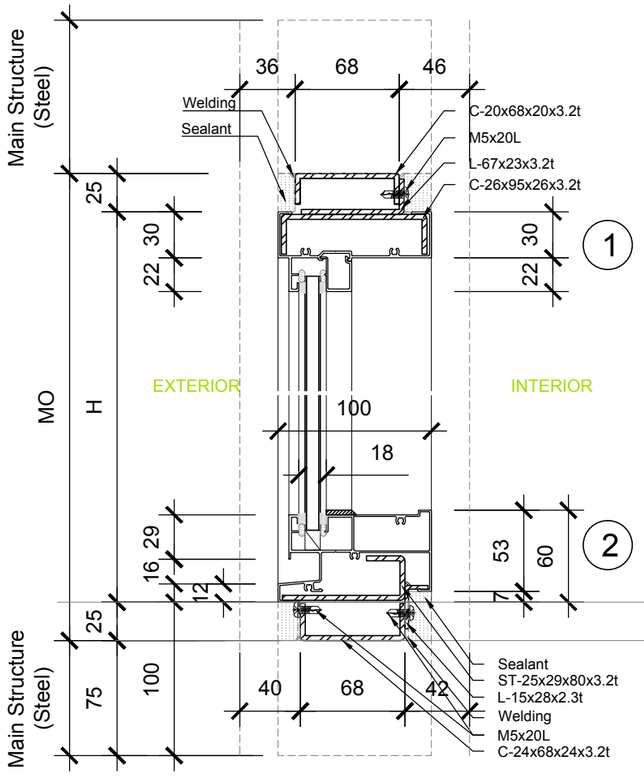

▼ Finish Level

▼ Construction Level

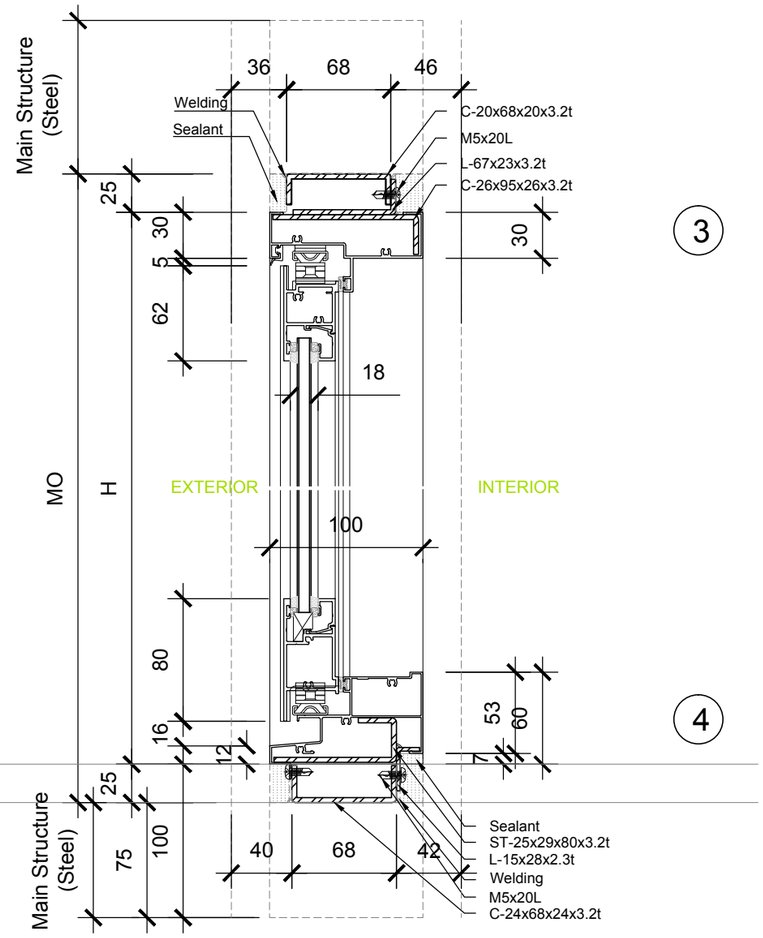

0 0.05 0.1 0.2 METER

Solar Decathlon Europe

Project: ORCHID HOUSE

Institution: 國立交通大學 National Chiao Tung University

NCTU Architecture 國立交通大學建築研究所

Team Name: NCTU/UNICODE

Address: 1001 Ta-Hsueh Road Hsinchu City 30010 Taiwan

Contact: www.sde.tw

Consultants:

Note:

Mark	Date	Description
DN	2013/04/01	SD Submission
DN	2013/07/01	DDc Submission
ST	2013/11/01	DD Submission
ST	2014/03/03	CD Submission
ST	2014/04/30	CD Submission
ST	2014/06/02	CD Submission

Drawn by	CF
Checked by	DN
Scale	1:4
Unit	mm

DWG. Title: WINDOW SCHEDULE AND DETAILS 5

DWG. No. AR-305

PAGE 42

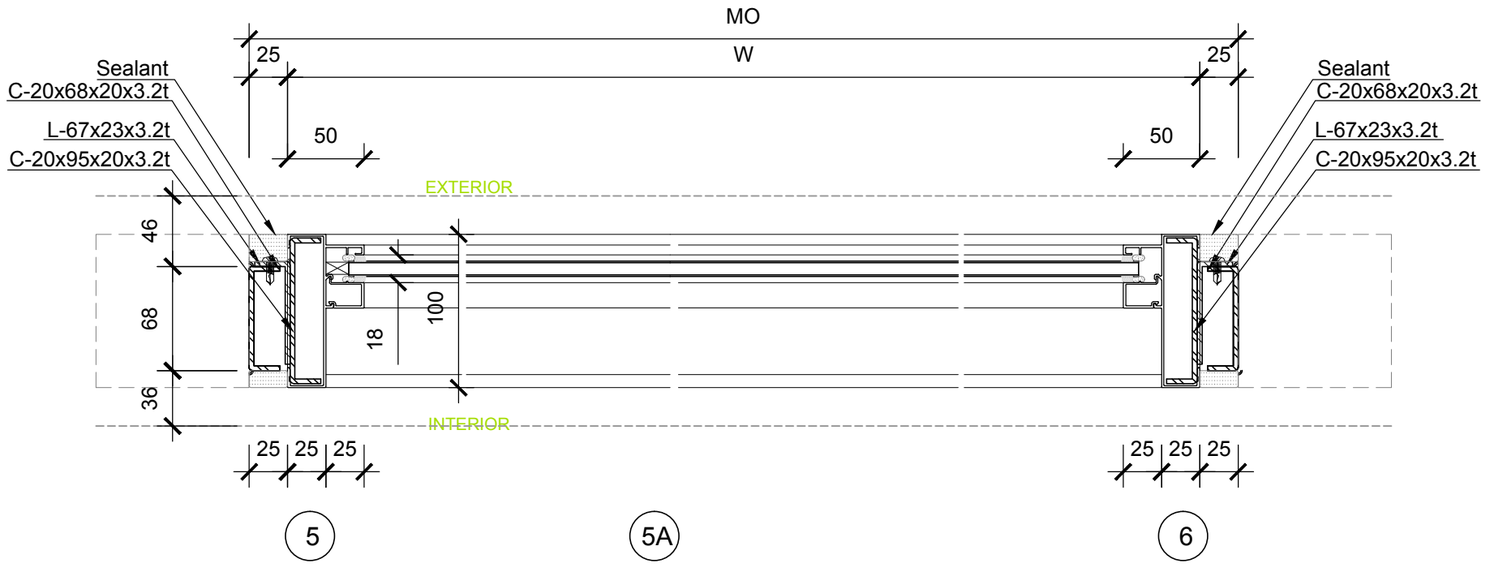

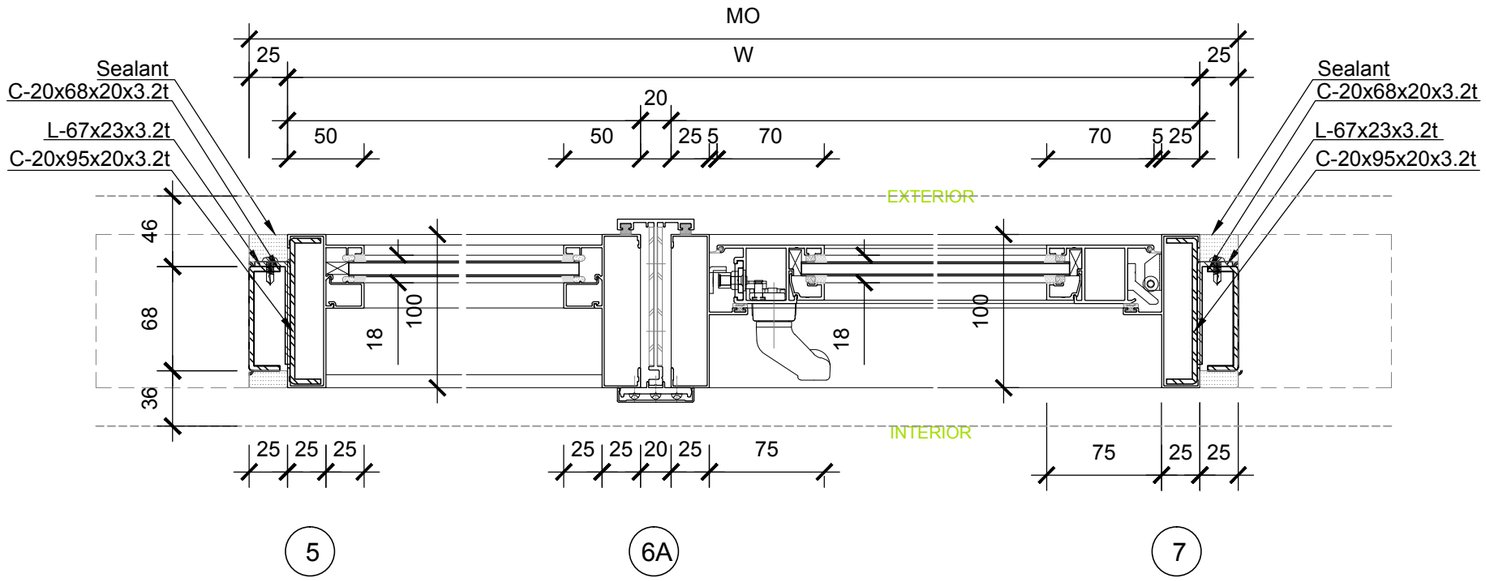

0 0.05 0.1 0.2 METER

Solar Decathlon Europe

Project: ORCHID HOUSE

Institution: 國立交通大學 National Chiao Tung University

NCTU Architecture 國立交通大學建築研究所

Team Name: NCTU/UNICODE

Address: 1001 Ta-Hsueh Road Hsinchu City 30010 Taiwan

Contact: www.sde.tw

Consultants:

Note:

Mark	Date	Description
DN	2013/04/01	SD Submission
DN	2013/07/01	DDc Submission
ST	2013/11/01	DD Submission
ST	2014/03/03	CD Submission
ST	2014/04/30	CD Submission
ST	2014/06/02	CD Submission

Drawn by	CF
Checked by	DN
Scale	1:4
Unit	mm

DWG. Title: WINDOW SCHEDULE AND DETAILS 6

DWG. No. AR-306

PAGE 43

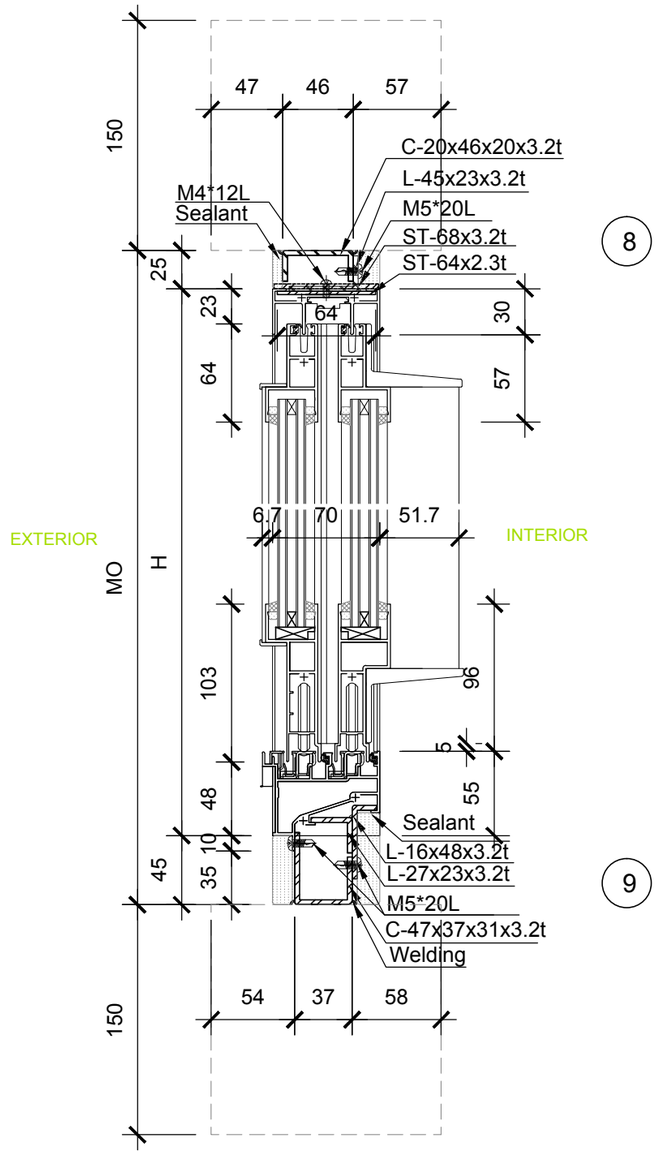

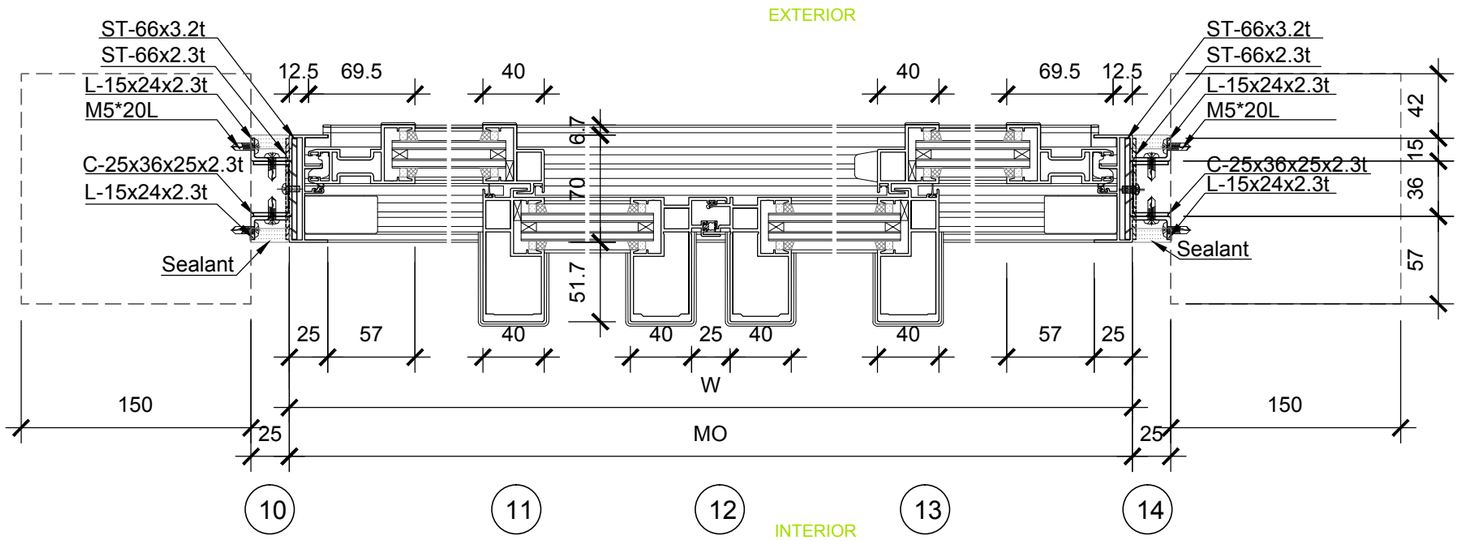

0 0.05 0.1 0.2 METER

Solar Decathlon Europe

Project: ORCHID HOUSE

Institution: 國立交通大學 National Chiao Tung University

NCTU Architecture 國立交通大學建築研究所

Team Name: NCTU/UNICODE

Address: 1001 Ta-Hsueh Road Hsinchu City 30010 Taiwan

Contact: www.sde.tw

Consultants:

Note:

Mark	Date	Description
DN	2013/04/01	SD Submission
DN	2013/07/01	DDc Submission
ST	2013/11/01	DD Submission
ST	2014/03/03	CD Submission
ST	2014/04/30	CD Submission
ST	2014/06/02	CD Submission

Drawn by	CF
Checked by	DN
Scale	1:4
Unit	mm

DWG. Title: WINDOW SCHEDULE AND DETAILS 7

DWG. No. AR-307

PAGE 44

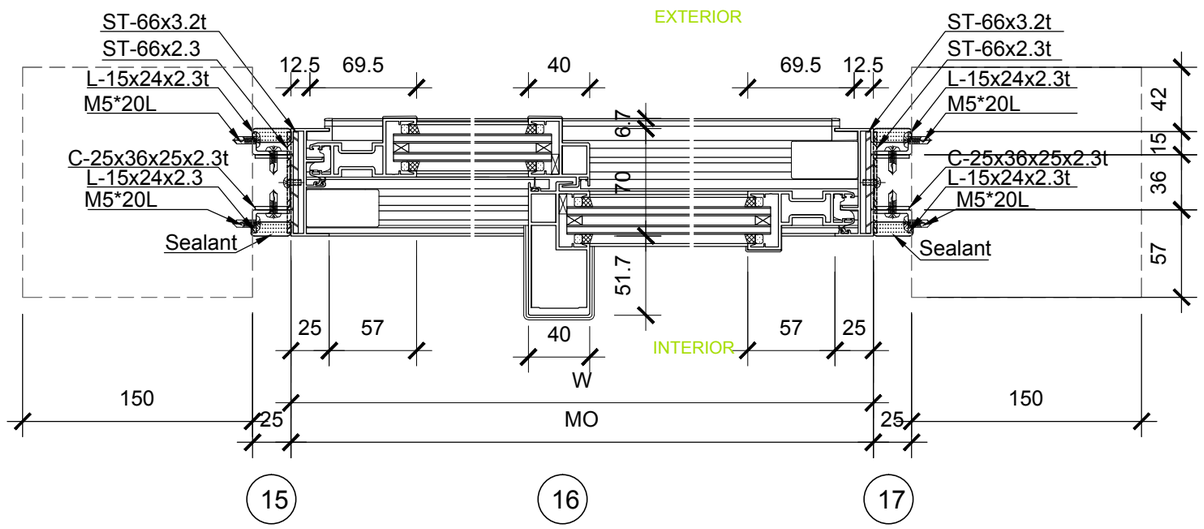

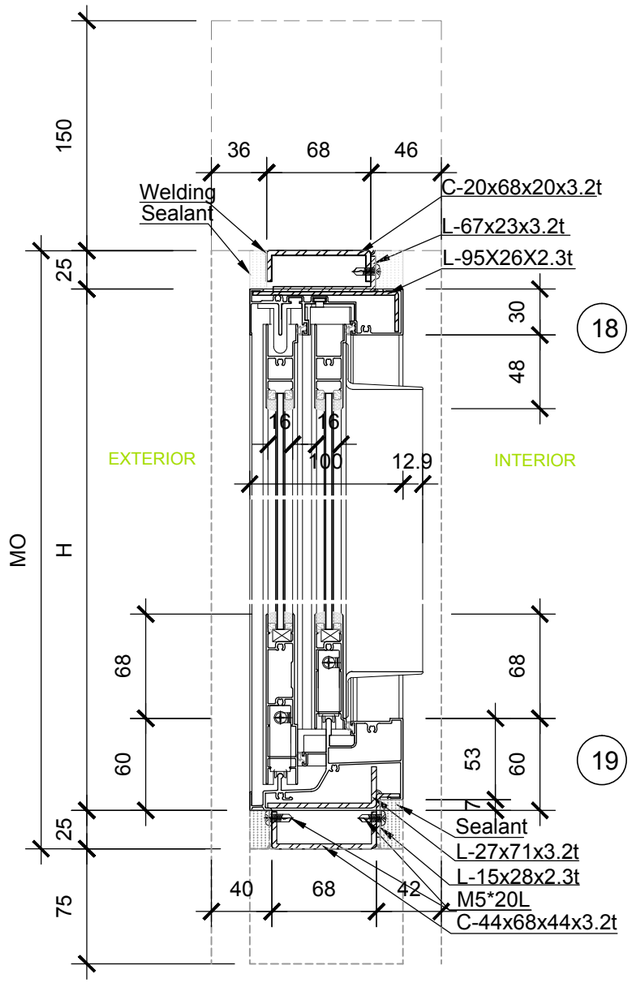

0 0.05 0.1 0.2 METER

Solar Decathlon Europe

Project: ORCHID HOUSE

Institution: 國立交通大學 National Chiao Tung University

NCTU Architecture 國立交通大學建築研究所

Team Name: NCTU/UNICODE

Address: 1001 Ta-Hsueh Road Hsinchu City 30010 Taiwan

Contact: www.sde.tw

Consultants:

Note:

Mark	Date	Description
DN	2013/04/01	SD Submission
DN	2013/07/01	DDc Submission
ST	2013/11/01	DD Submission
ST	2014/03/03	CD Submission
ST	2014/04/30	CD Submission
ST	2014/06/02	CD Submission

Drawn by CF

Checked by DN

Scale 1:4

Unit mm

DWG. Title

WINDOW SCHEDULE AND DETAILS 8

DWG. No. AR-308

PAGE 45

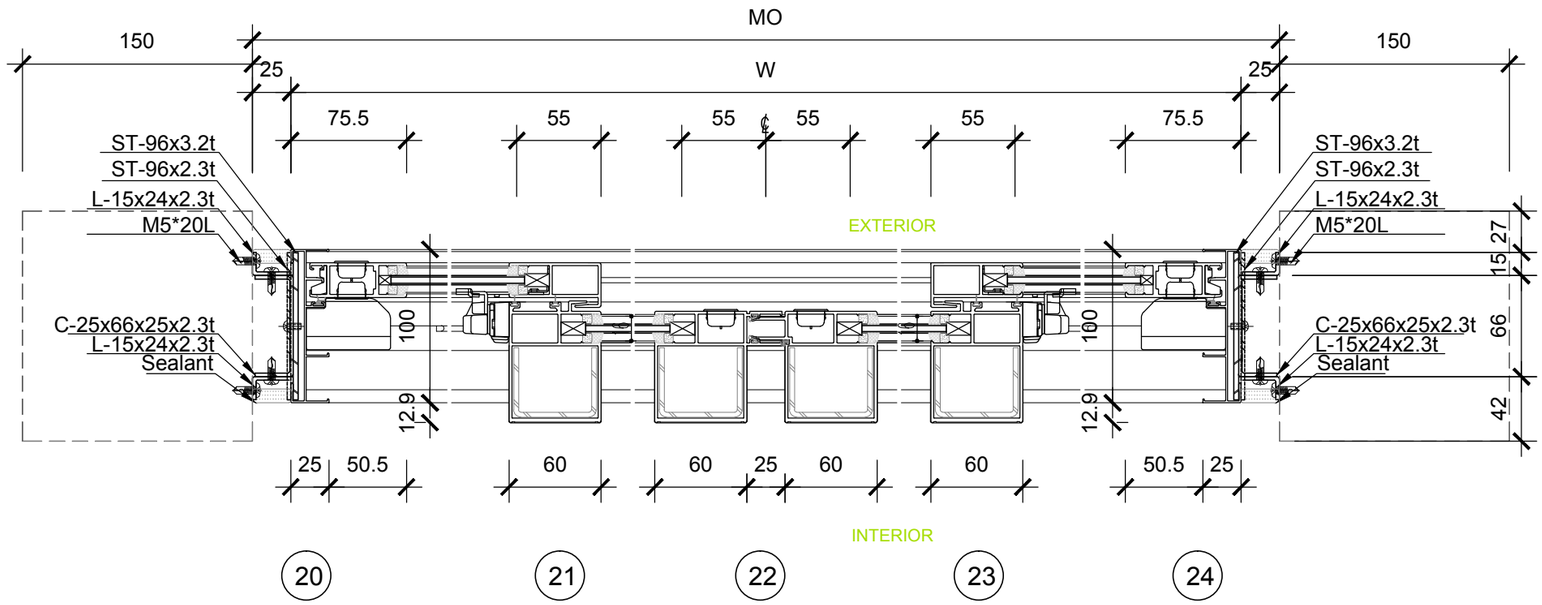

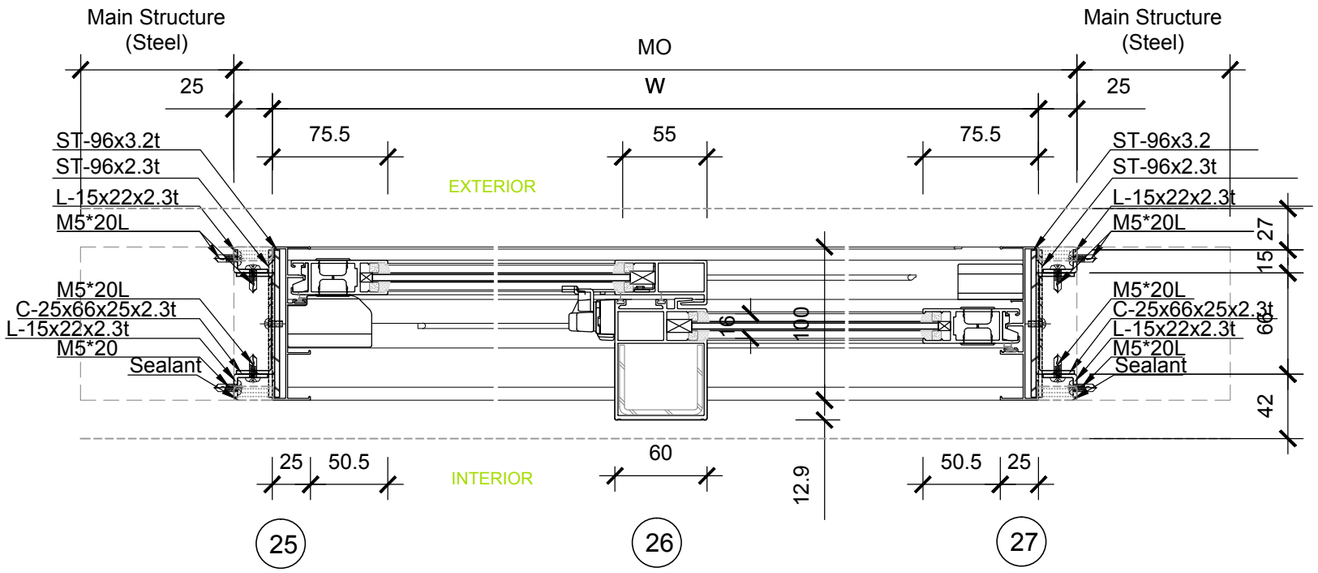

0 0.05 0.1 0.2 METER

Solar Decathlon Europe

Project: ORCHID HOUSE

Institution: 國立交通大學 National Chiao Tung University

NCTU Architecture 國立交通大學建築研究所

Team Name:	NCTU/UNICODE
Address:	1001 Ta-Hsueh Road Hsinchu City 30010 Taiwan
Contact:	www.sde.tw

Consultants:

Note:

Mark	Date	Description
DN	2013/04/01	SD Submission
DN	2013/07/01	DDc Submission
ST	2013/11/01	DD Submission
ST	2014/03/03	CD Submission
ST	2014/04/30	CD Submission
ST	2014/06/02	CD Submission

Drawn by	CF
Checked by	DN
Scale	1:4
Unit	mm

DWG. Title

WINDOW SCHEDULE AND DETAILS 9

DWG. No. AR-309

PAGE 46

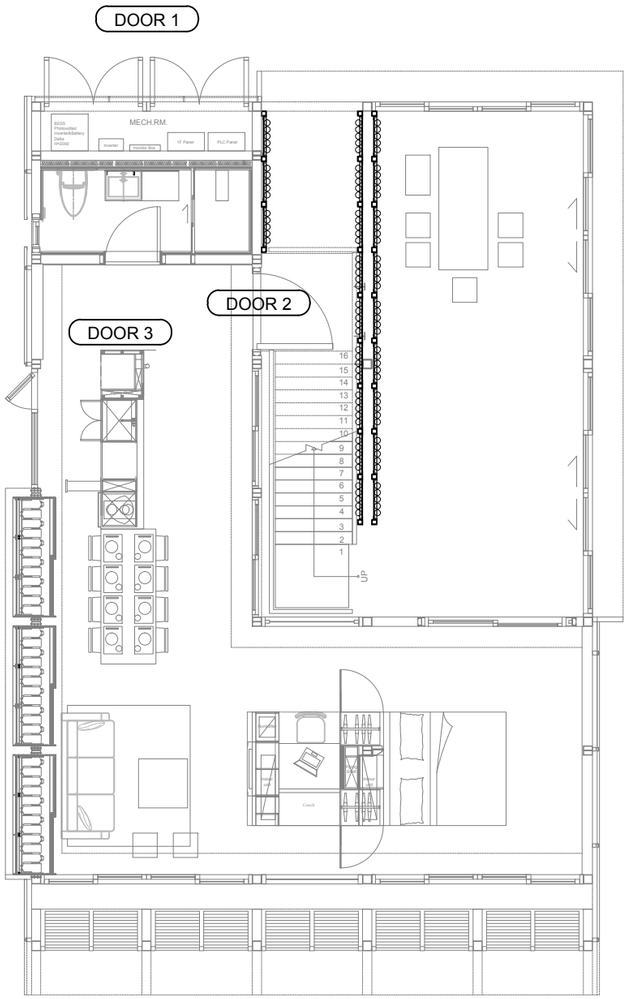

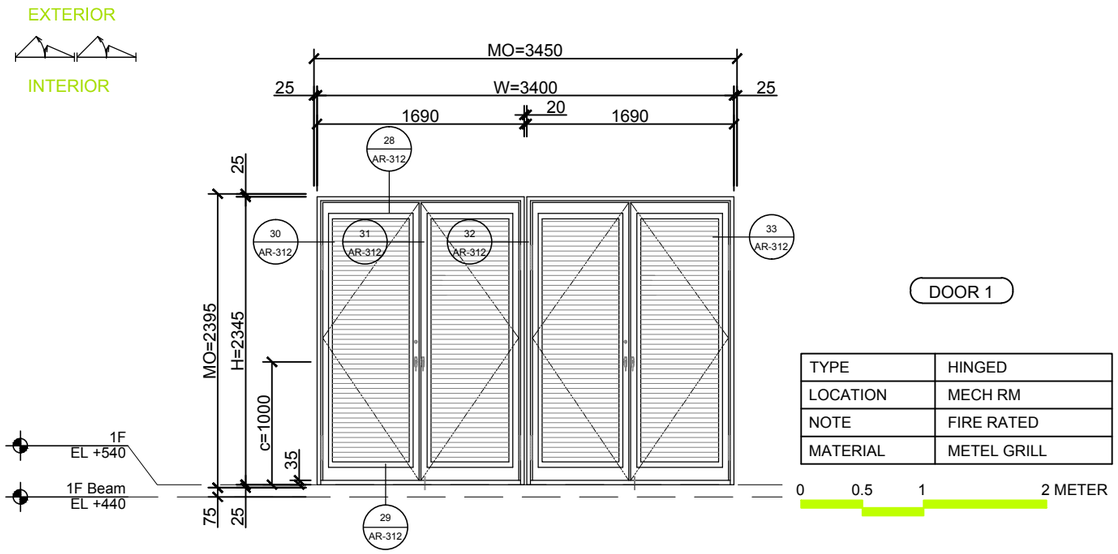

DOOR 1

TYPE	HINGED
LOCATION	MECH RM
NOTE	FIRE RATED
MATERIAL	METEL GRILL

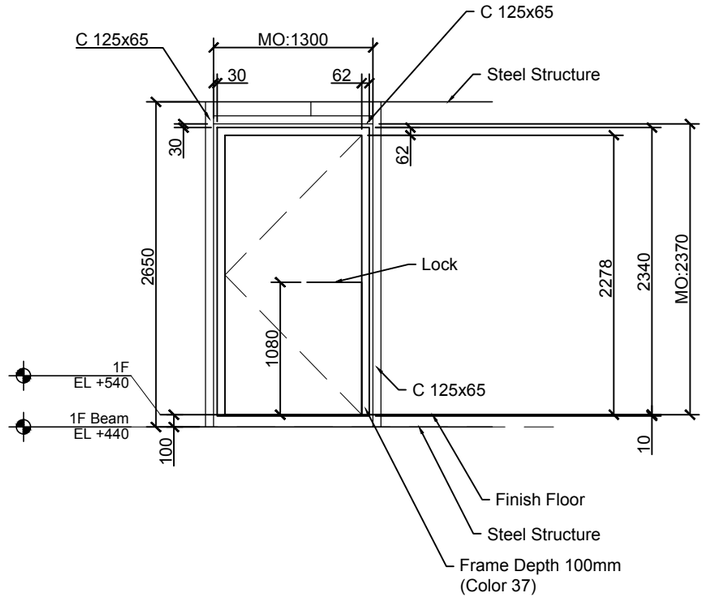

DOOR 2

TYPE	HINGED
LOCATION	ENTRANCE
NOTE	FIRE RATED
MATERIAL	METEL+GLASS

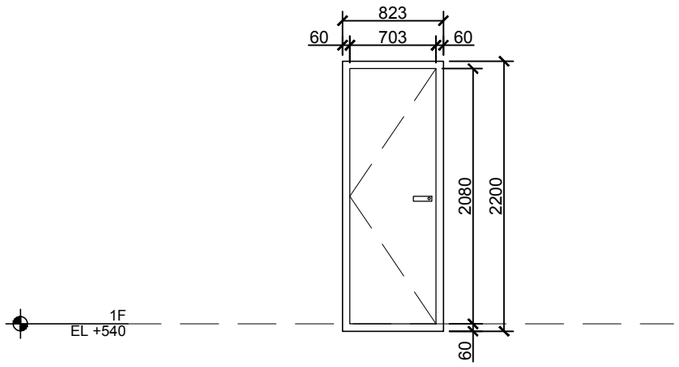

DOOR 3

TYPE	HINGED
LOCATION	BATH RM
NOTE	FIRE RATED
MATERIAL	WOOD

Solar Decathlon Europe

Project: ORCHID HOUSE

Institution: 國立交通大學 National Chiao Tung University

NCTU Architecture 國立交通大學建築研究所

Team Name: NCTU/UNICODE
Address: 1001 Ta-Hsueh Road Hsinchu City 30010 Taiwan
Contact: www.sde.tw

Consultants:

Note:

Mark	Date	Description
DN	2013/04/01	SD Submission
DN	2013/07/01	DDc Submission
ST	2013/11/01	DD Submission
ST	2014/03/03	CD Submission
ST	2014/04/30	CD Submission
ST	2014/06/02	CD Submission

Drawn by	CF
Checked by	DN
Scale	1:50
Unit	mm

DWG. Title: DOOR SCHEDULE AND DETAILS 1

DWG. No. AR-311

PAGE 47

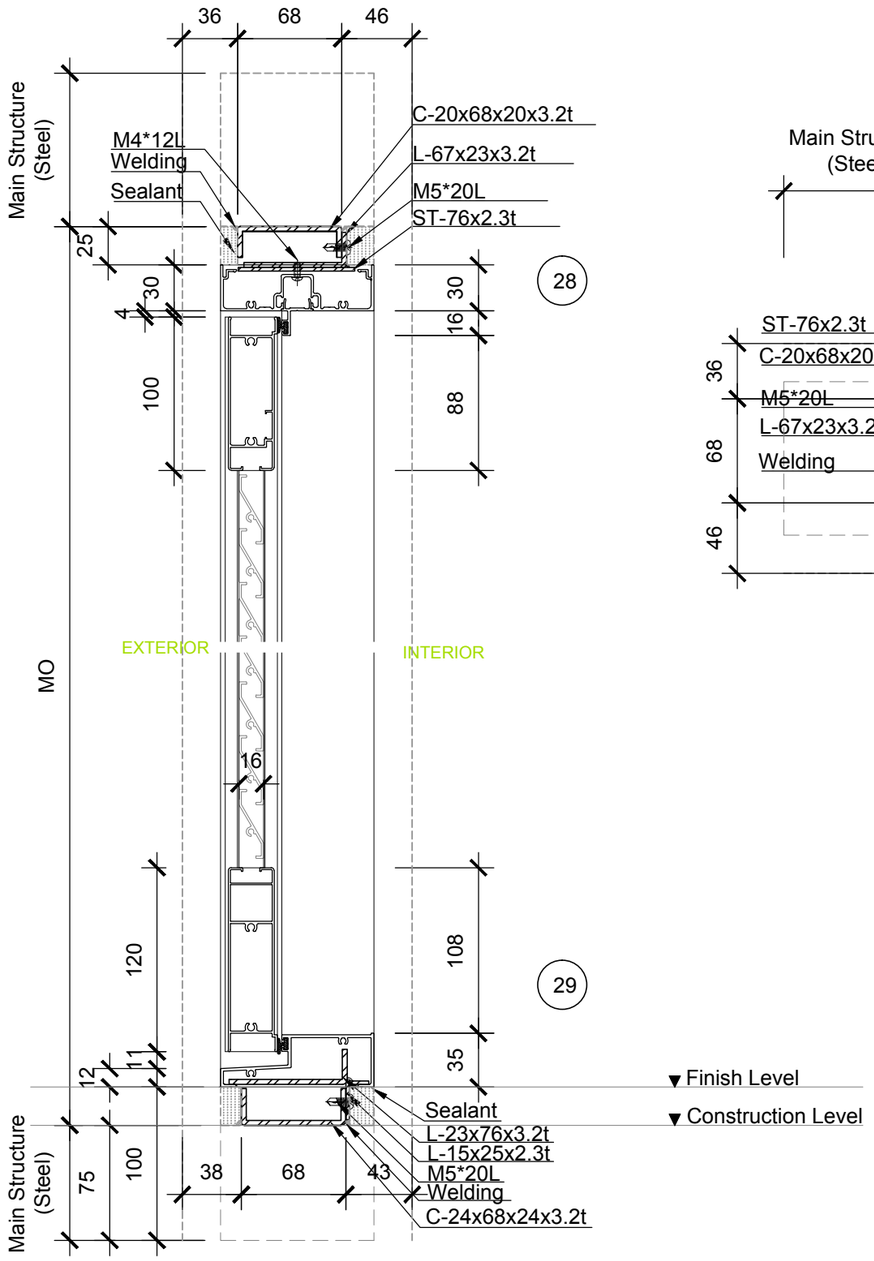

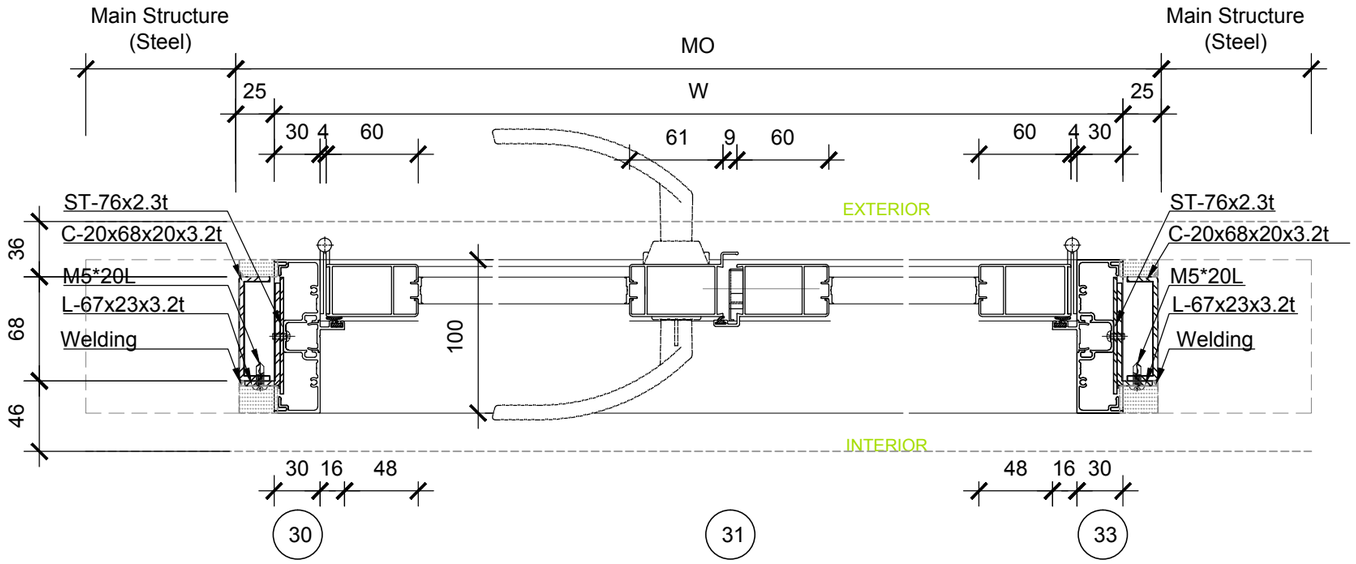

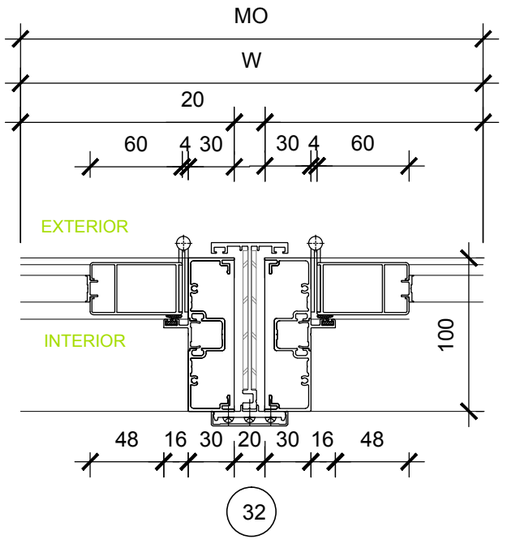

0 0.05 0.1 0.2 METER

Solar Decathlon Europe

Project: ORCHID HOUSE

Institution: 國立交通大學 National Chiao Tung University

NCTU Architecture 國立交通大學建築研究所

Team Name: NCTU/UNICODE

Address: 1001 Ta-Hsueh Road Hsinchu City 30010 Taiwan

Contact: www.sde.tw

Consultants:

Note:

Mark	Date	Description
DN	2013/04/01	SD Submission
DN	2013/07/01	DDc Submission
ST	2013/11/01	DD Submission
ST	2014/03/03	CD Submission
ST	2014/04/30	CD Submission
ST	2014/06/02	CD Submission

Drawn by	CF
Checked by	DN
Scale	1:4
Unit	mm

DWG. Title

DOOR SCHEDULE AND DETAILS 2

DWG. No. AR-312

PAGE 48

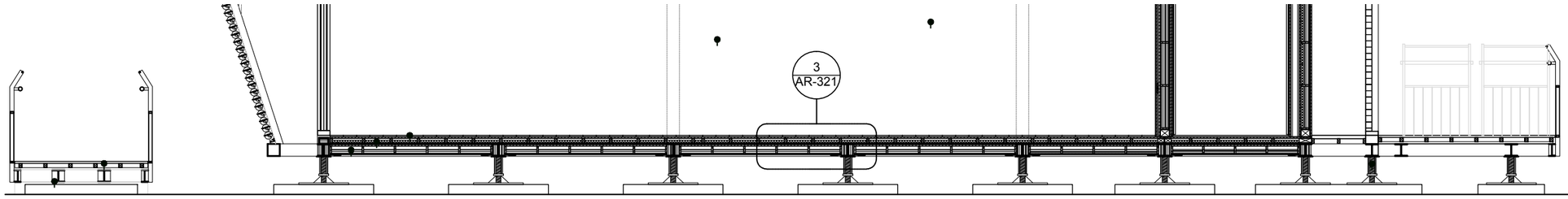

0 1 2 5 METER

1

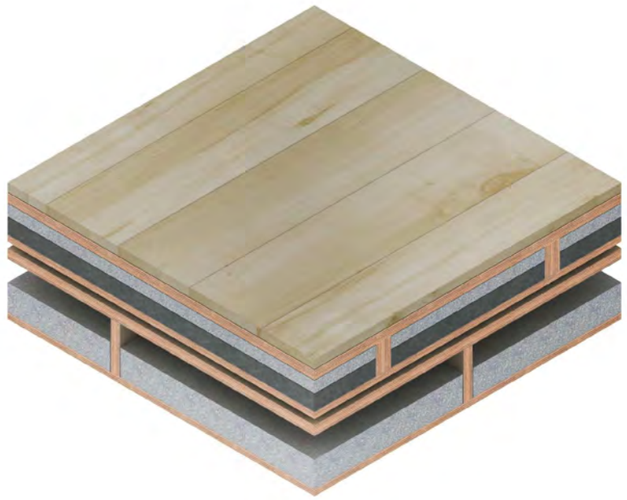

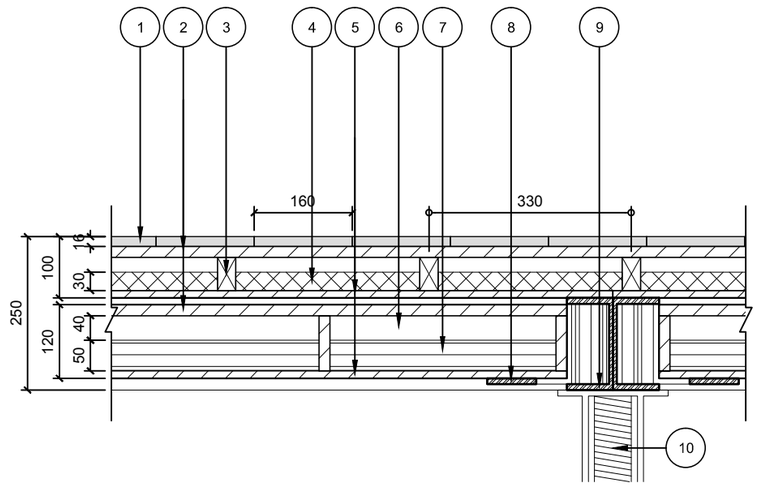

1 Finished Flooring 16mm
2 Plywood 18mm
3 Timber 30mm*54mm
4 Vacuum Insulation 30mm
5 Plywood 12mm
6 Air gap 40mm
7 E-foam 50mm
8 Floor supporting
9 Girder C-150x75 t=9.5mm
10 Footing

Thermal conductivity R = 7.7 (m²K/W)

0 0.1 0.2 0.5 METER

4

3

Solar Decathlon Europe

Project: ORCHID HOUSE

Institution: 國立交通大學 National Chiao Tung University

NCTU Architecture 國立交通大學建築研究所

Team Name: NCTU/UNICODE
Address: 1001 Ta-Hsueh Road
Hsinchu City 30010
Taiwan
Contact: www.sde.tw

Consultants:

Note:

N

Mark	Date	Description
DN	2013/04/01	SD Submission
DN	2013/07/01	DDc Submission
ST	2013/11/01	DD Submission
ST	2014/03/03	CD Submission
ST	2014/04/30	CD Submission
ST	2014/06/02	CD Submission

Drawn by	CH
Checked by	DN
Scale	1:10
Unit	mm

DWG. Title
FLOOR CONSTRUCTION GROUNDLEVEL

DWG. No. AR-321

PAGE 49

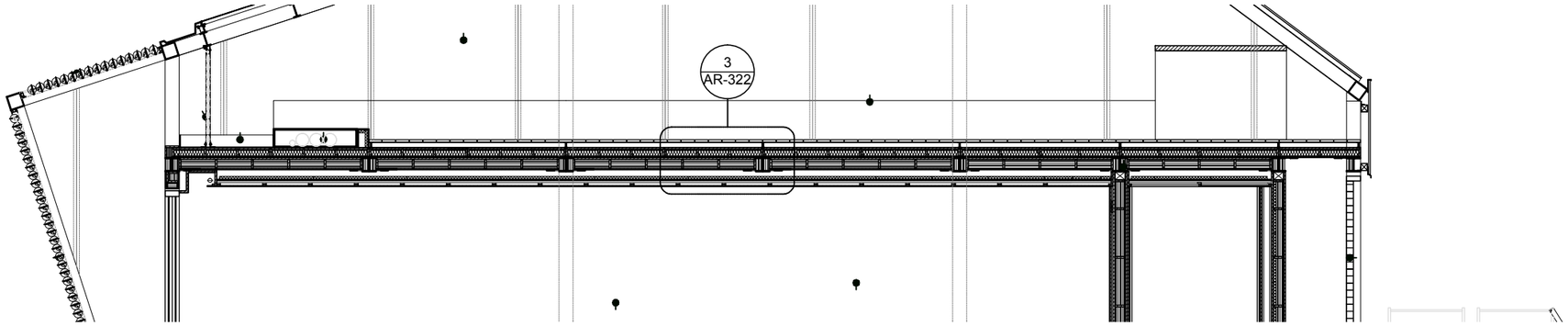

0 1 2 5 METER

1

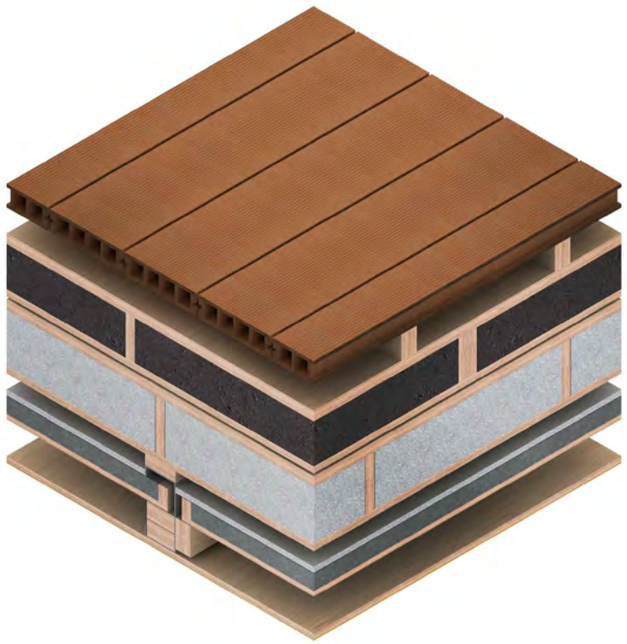

4

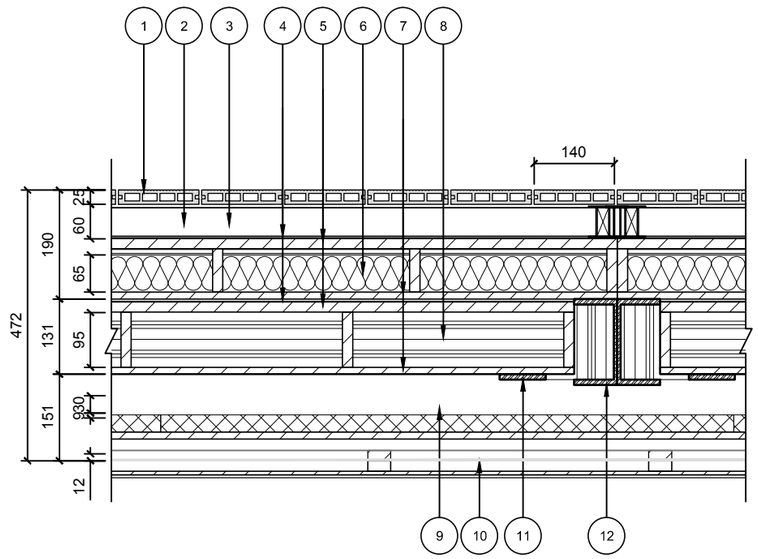

1 Wood Plastic Composites 40mm
2 Timber 30mm*44mm
3 Air gap 44mm
4 Water proving 2mm
5 Plywood 18mm
6 Glass foam 65mm
7 Plywood 12mm
8 E-foam 95mm
9 Vacuum Insulation 30mm
10 Ceiling 12mm
11 Floor supporting
12 Girder C-150x75 t=9.5mm

Thermal conductivity R = 13.7 (m²K/W)

0 0.1 0.2 0.5 METER

3

Solar Decathlon Europe

Project: ORCHID HOUSE

Institution: 國立交通大學 National Chiao Tung University

NCTU Architecture 國立交通大學建築研究所

Team Name: NCTU/UNICODE
Address: 1001 Ta-Hsueh Road
Hsinchu City 30010
Taiwan
Contact: www.sde.tw

Consultants:

Note:

N

Mark	Date	Description
DN	2013/04/01	SD Submission
DN	2013/07/01	DDc Submission
ST	2013/11/01	DD Submission
ST	2014/03/03	CD Submission
ST	2014/04/30	CD Submission
ST	2014/06/02	CD Submission

Drawn by	CH
Checked by	DN
Scale	1:10
Unit	mm

DWG. Title
FLOOR CONSTRUCTION
MEZZANINE LEVEL

DWG. No. AR-322

PAGE 50

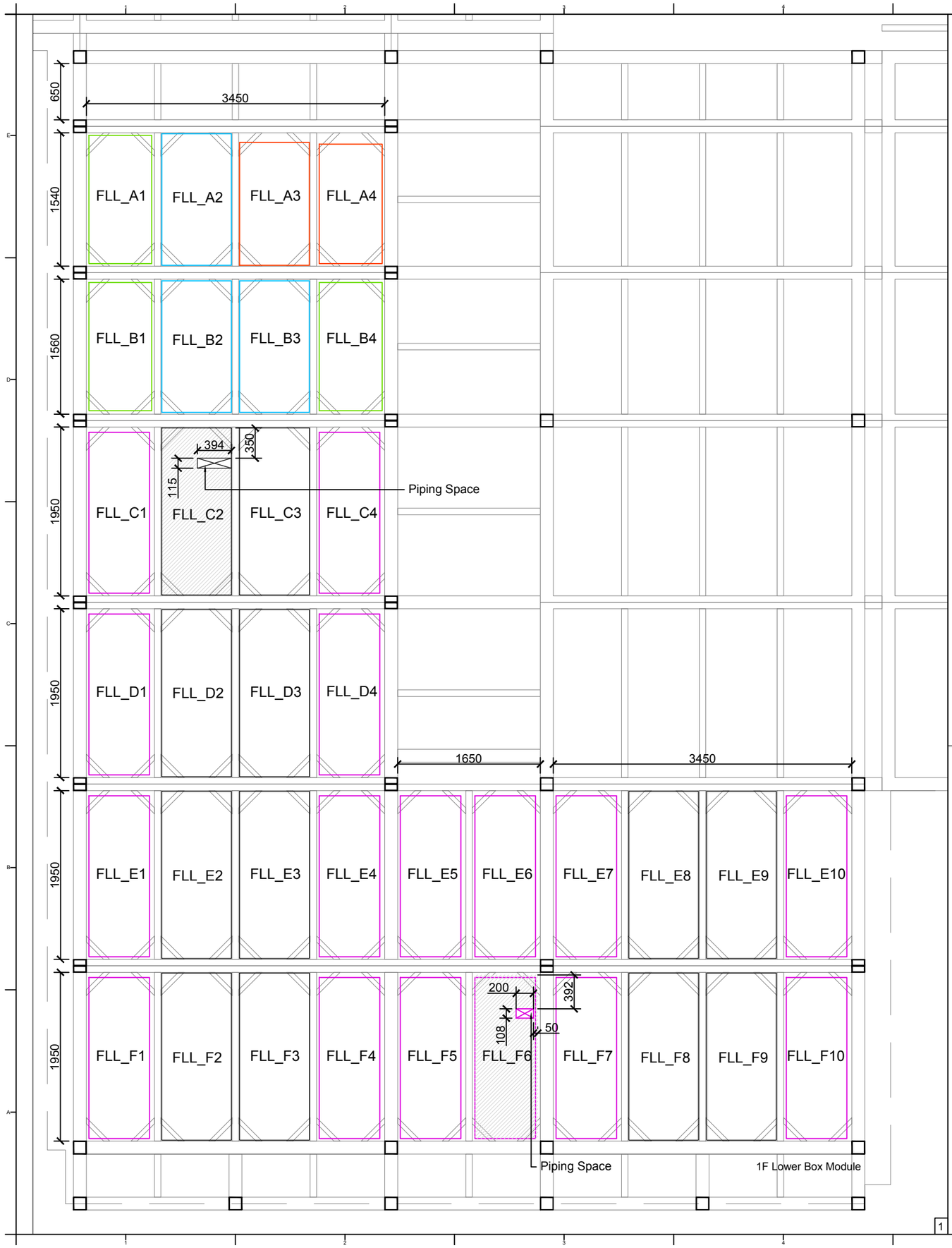

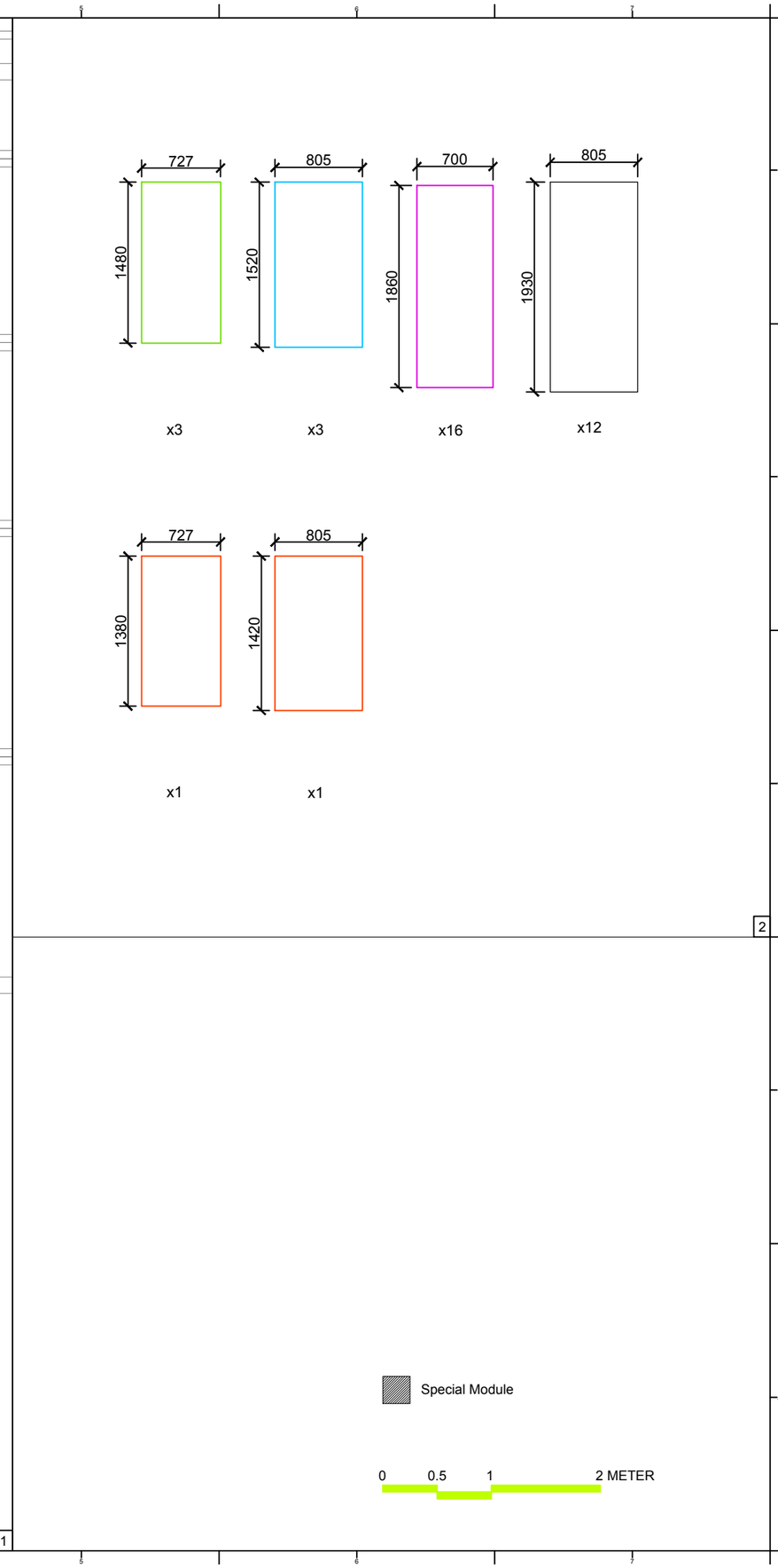

Solar Decathlon Europe

Project: ORCHID HOUSE

Institution: 國立交通大學 National Chiao Tung University

NCTU Architecture 國立交通大學建築研究所

Team Name: NCTU/UNICODE

Address: 1001 Ta-Hsueh Road
Hsinchu City 30010
Taiwan

Contact: www.sde.tw

Consultants:

Note:

N

Mark	Date	Description
DN	2013/04/01	SD Submission
DN	2013/07/01	DDc Submission
ST	2013/11/01	DD Submission
ST	2014/03/03	CD Submission
ST	2014/04/30	CD Submission
ST	2014/06/02	CD Submission

Drawn by	CF
Checked by	ST
Scale	1:50
Unit	mm

DWG. Title

FLOOR CONSTRUCTION DETAILS
GROUND LEVEL1

DWG. No. AR-323

PAGE 51

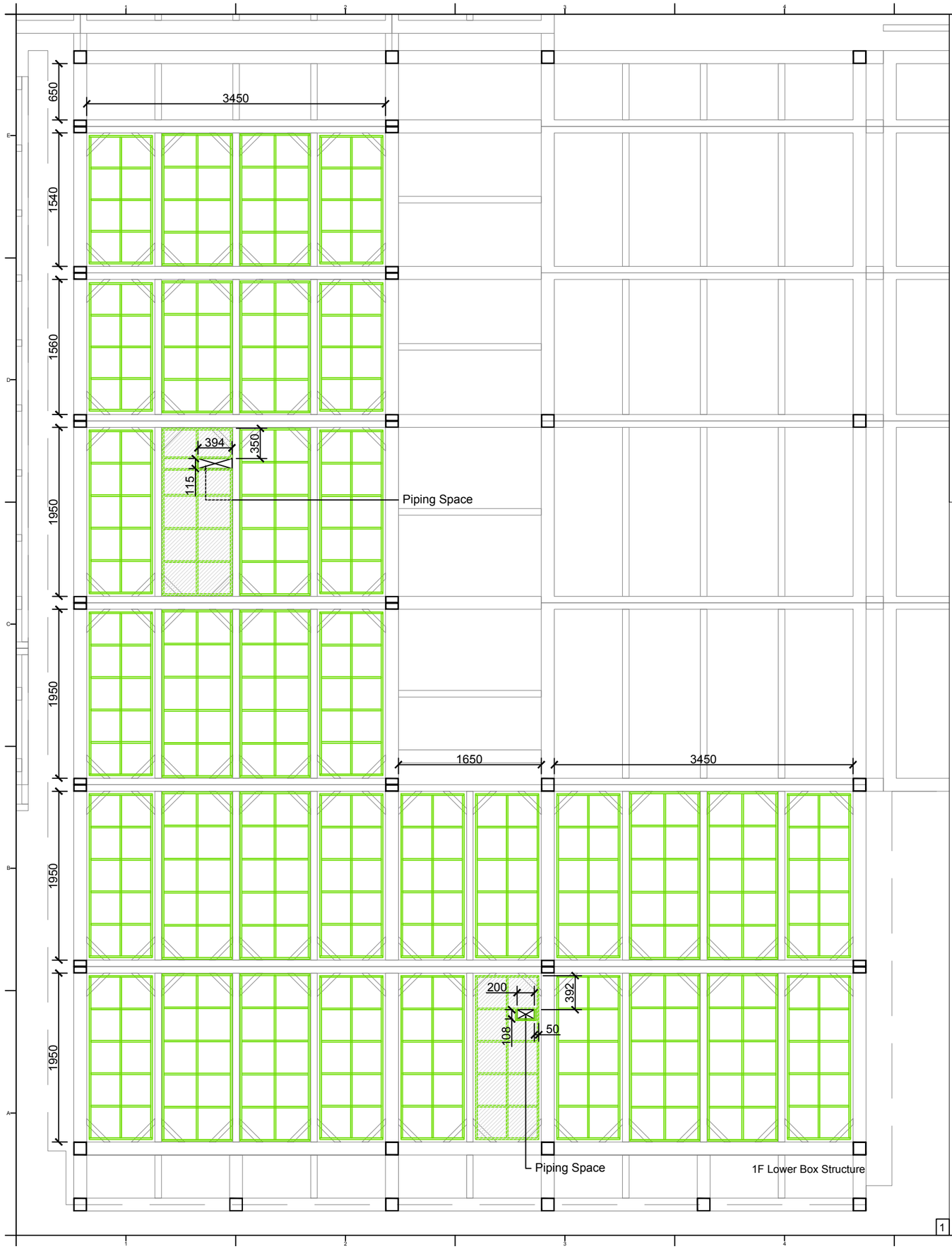

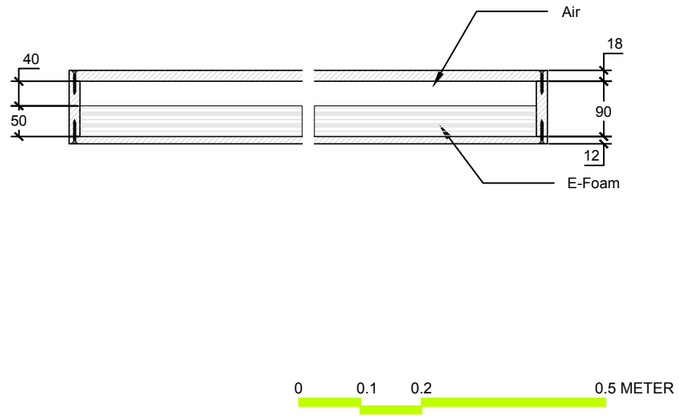

Special Module

0 1 2 5 METER

Solar Decathlon Europe

Project: ORCHID HOUSE

Institution: 國立交通大學 National Chiao Tung University

NCTU Architecture 國立交通大學建築研究所

Team Name: NCTU/UNICODE

Address: 1001 Ta-Hsueh Road Hsinchu City 30010 Taiwan

Contact: www.sde.tw

Consultants:

Note:

Mark	Date	Description
DN	2013/04/01	SD Submission
DN	2013/07/01	DDc Submission
ST	2013/11/01	DD Submission
ST	2014/03/03	CD Submission
ST	2014/04/30	CD Submission
ST	2014/06/02	CD Submission

Drawn by	CF
Checked by	ST
Scale	1:50
Unit	mm

DWG. Title

FLOOR CONSTRUCTION DETAILS GROUND LEVEL 2

DWG. No. AR-324

PAGE 52

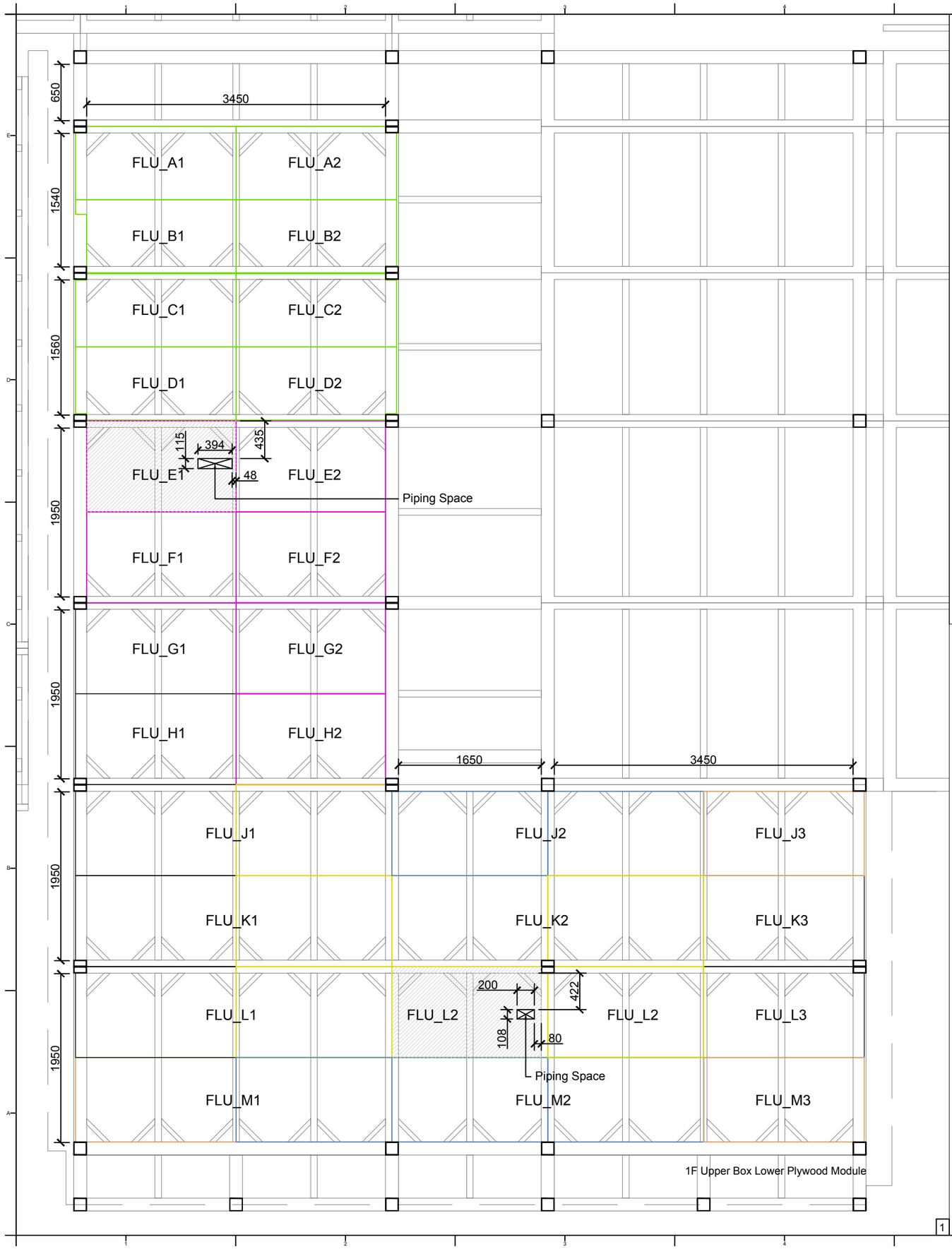

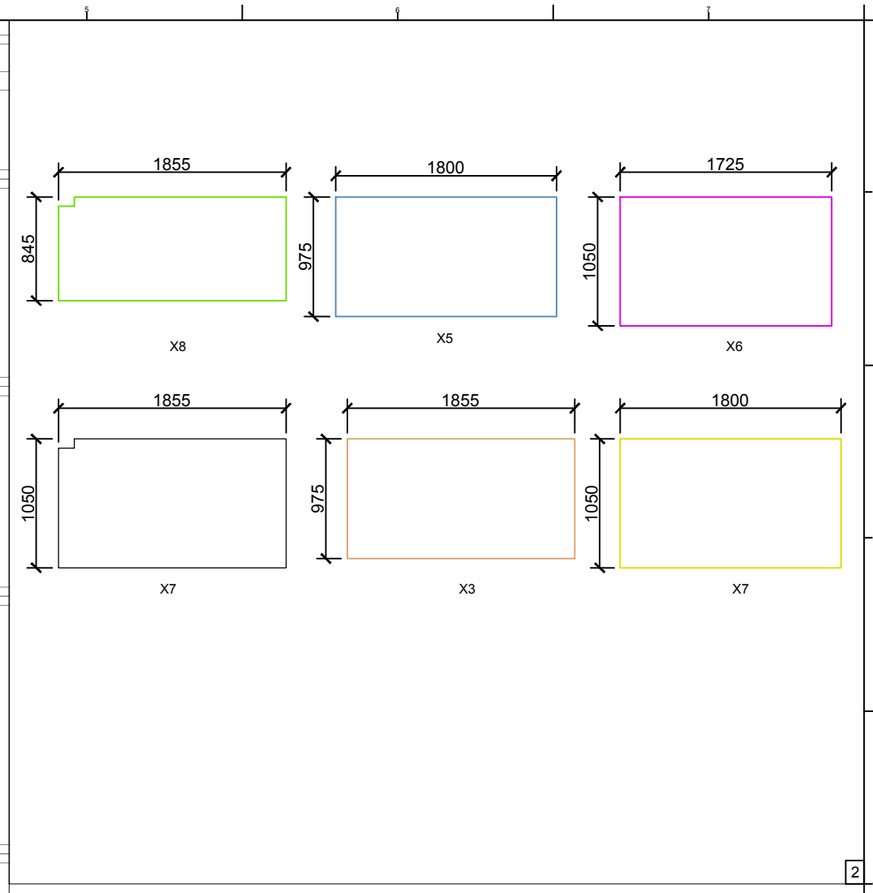

Special Module

0 0.5 1 2 METER

Solar Decathlon Europe

Project: ORCHID HOUSE

Institution: 國立交通大學 National Chiao Tung University

NCTU Architecture 國立交通大學建築研究所

Team Name:	NCTU/UNICODE
Address:	1001 Ta-Hsueh Road Hsinchu City 30010 Taiwan
Contact:	www.sde.tw

Consultants:

Note:

N

Mark	Date	Description
DN	2013/04/01	SD Submission
DN	2013/07/01	DDc Submission
ST	2013/11/01	DD Submission
ST	2014/03/03	CD Submission
ST	2014/04/30	CD Submission
ST	2014/06/02	CD Submission

Drawn by	CF
Checked by	ST
Scale	1:50
Unit	mm

DWG. Title

FLOOR CONSTRUCTION DETAILS GROUND LEVEL 3

DWG. No.	PAGE
AR-325	53

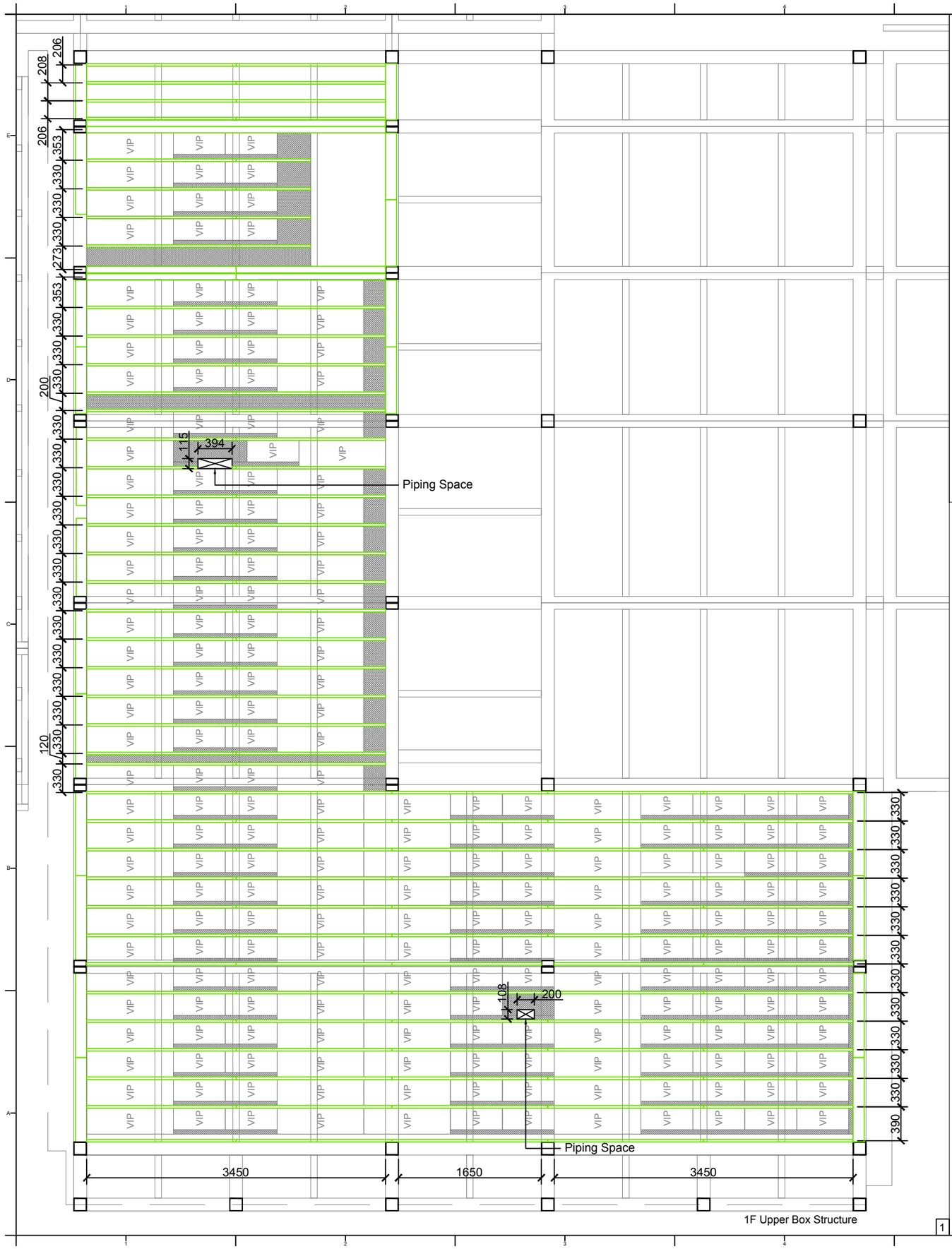

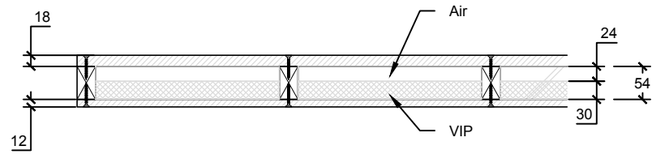

0 0.1 0.2 0.5 METER

2

0 1 2 5 METER

Solar Decathlon Europe

Project:

ORCHID HOUSE

Institution:

國立交通大學 National Chiao Tung University

NCTU Architecture 國立交通大學建築研究所

Team Name: NCTU/UNICODE

Address: 1001 Ta-Hsueh Road Hsinchu City 30010 Taiwan

Contact: www.sde.tw

Consultants:

Note:

Mark	Date	Description
DN	2013/04/01	SD Submission
DN	2013/07/01	DDc Submission
ST	2013/11/01	DD Submission
ST	2014/03/03	CD Submission
ST	2014/04/30	CD Submission
ST	2014/06/02	CD Submission

Drawn by	CF
Checked by	ST
Scale	1:50
Unit	mm

DWG. Title

FLOOR CONSTRUCTION DETAILS GROUND LEVEL 4

DWG. No. AR-326

PAGE 54

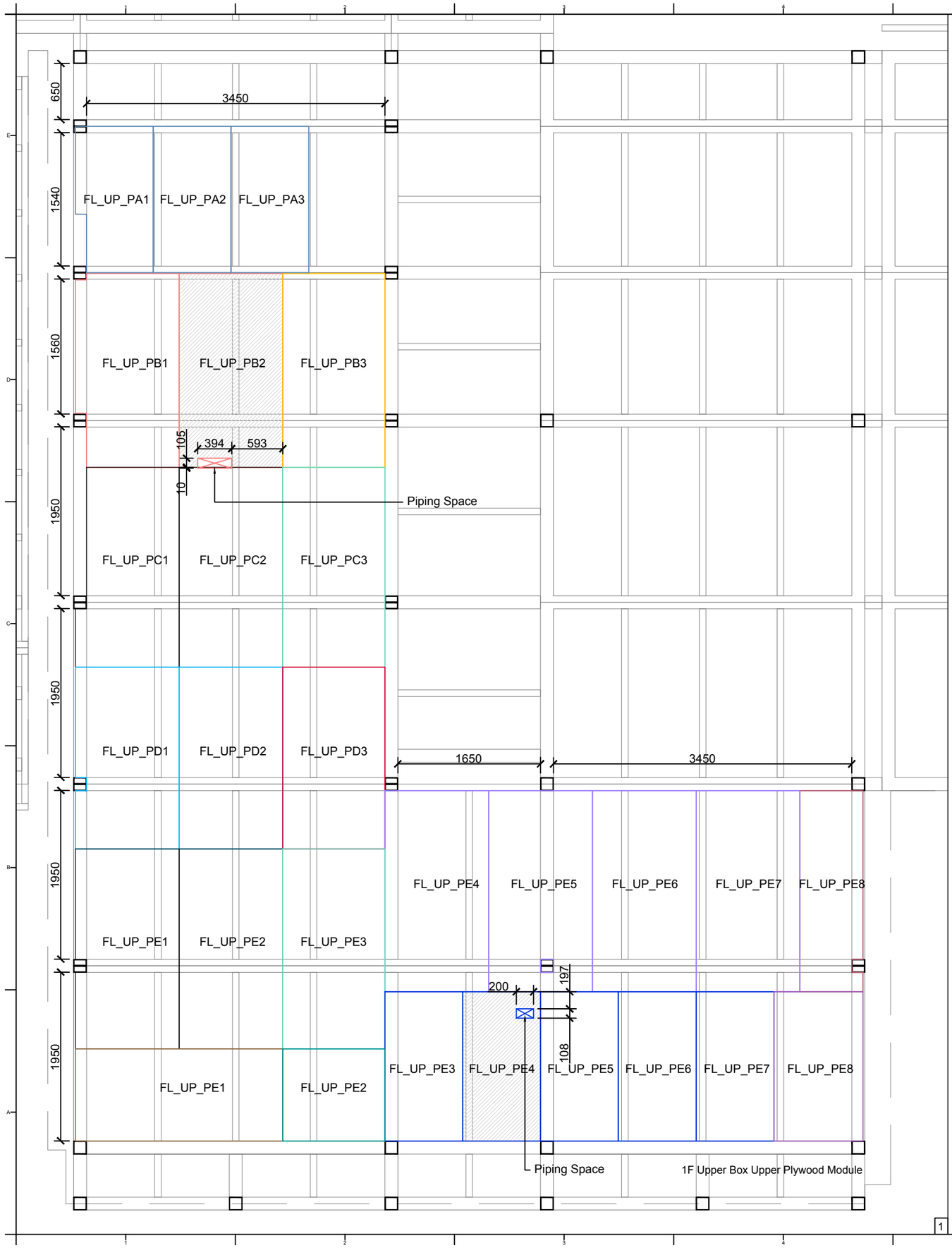

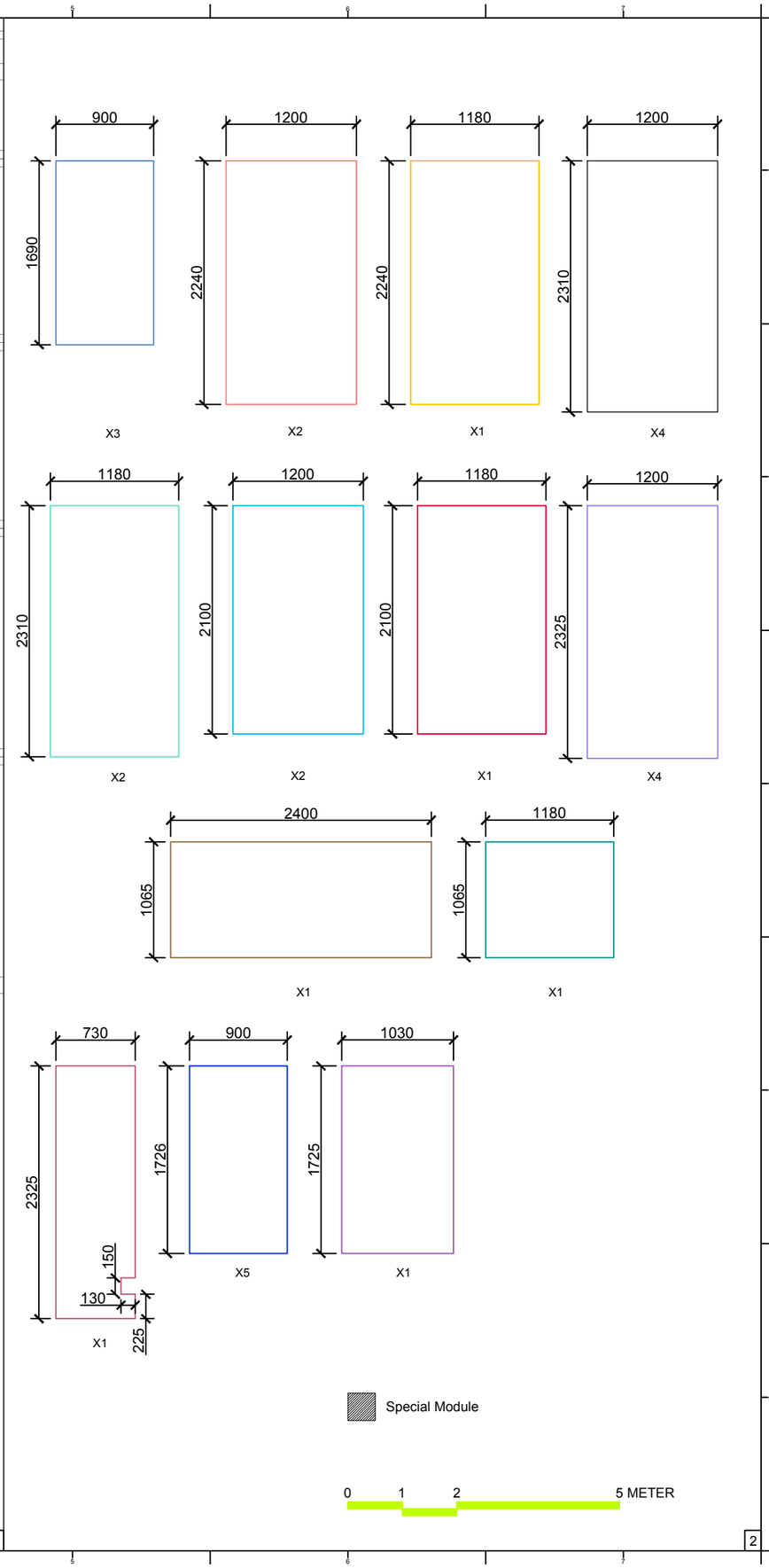

Solar Decathlon Europe

Project: ORCHID HOUSE

Institution: 國立交通大學 National Chiao Tung University

NCTU Architecture 國立交通大學建築研究所

Team Name: NCTU/UNICODE

Address: 1001 Ta-Hsueh Road
Hsinchu City 30010
Taiwan

Contact: www.sde.tw

Consultants:

Note:

Mark	Date	Description
DN	2013/04/01	SD Submission
DN	2013/07/01	DDc Submission
ST	2013/11/01	DD Submission
ST	2014/03/03	CD Submission
ST	2014/04/30	CD Submission
ST	2014/06/02	CD Submission

Drawn by	CF
Checked by	ST
Scale	1:50
Unit	mm

DWG. Title
FLOOR CONSTRUCTION DETAILS
GROUND LEVEL 5

DWG. No. AR-327

PAGE 55

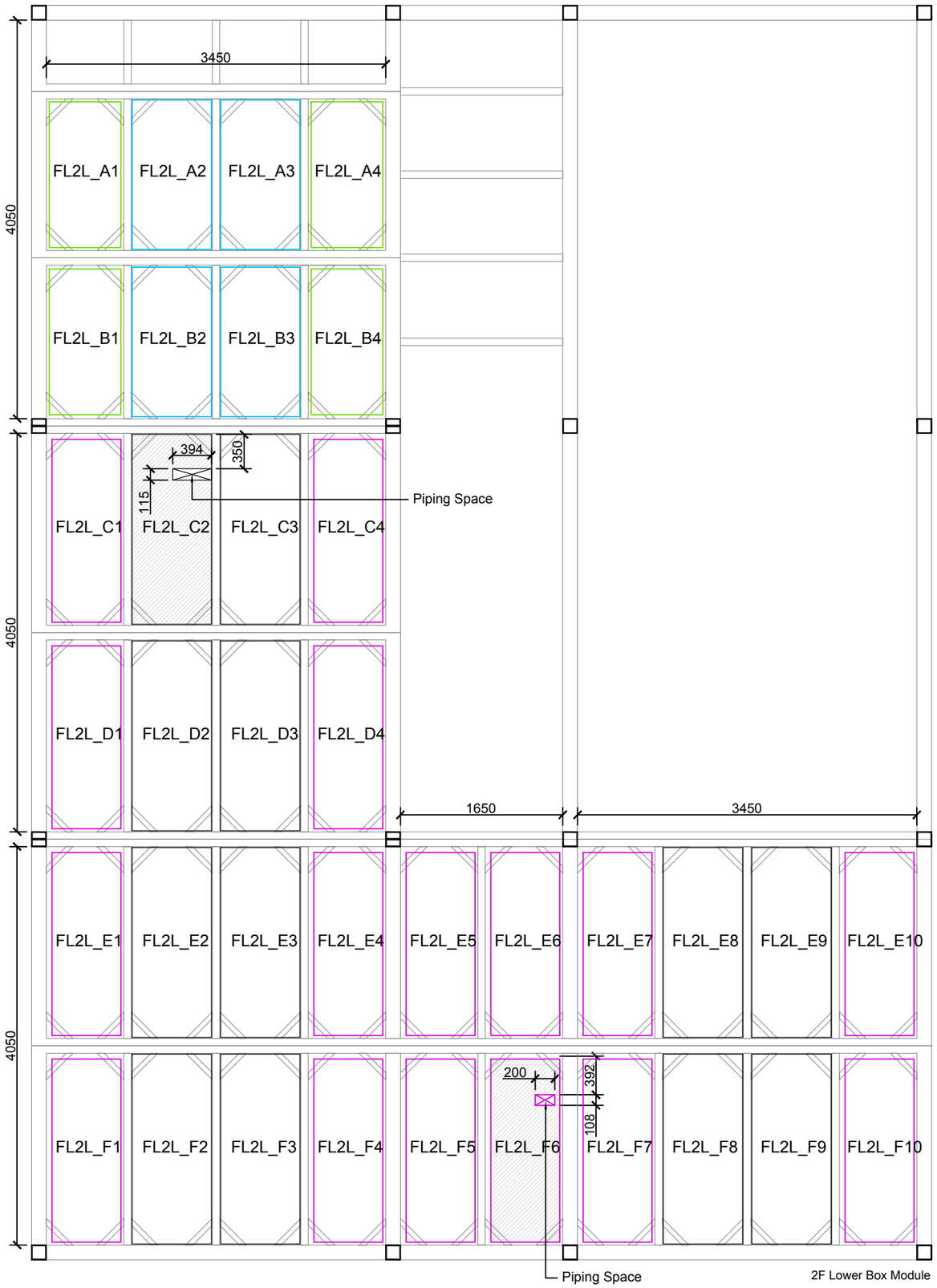

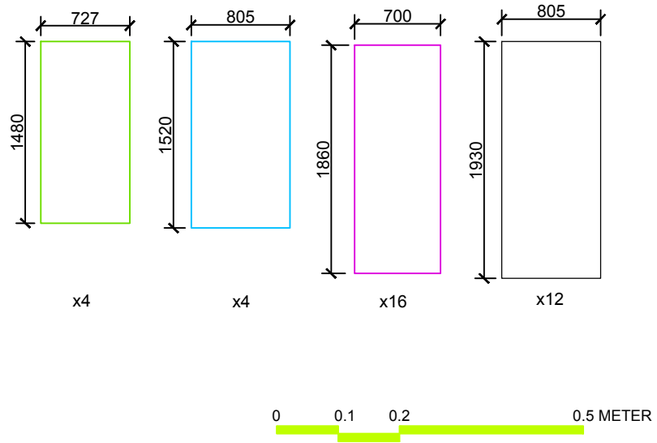

2

Special Module

0 0.5 1 2 METER

1

Solar Decathlon Europe

Project:

ORCHID HOUSE

Institution:

國立交通大學 National Chiao Tung University

NCTU Architecture 國立交通大學建築研究所

Team Name: NCTU/UNICODE

Address: 1001 Ta-Hsueh Road Hsinchu City 30010 Taiwan

Contact: www.sde.tw

Consultants:

Note:

N

Mark	Date	Description
DN	2013/04/01	SD Submission
DN	2013/07/01	DDc Submission
ST	2013/11/01	DD Submission
ST	2014/03/03	CD Submission
ST	2014/04/30	CD Submission
ST	2014/06/02	CD Submission

Drawn by	CF
Checked by	ST
Scale	1:50
Unit	mm

DWG. Title

FLOOR CONSTRUCTION DETAILS MEZZANINE LEVEL 1

DWG. No. AR-328

PAGE 56

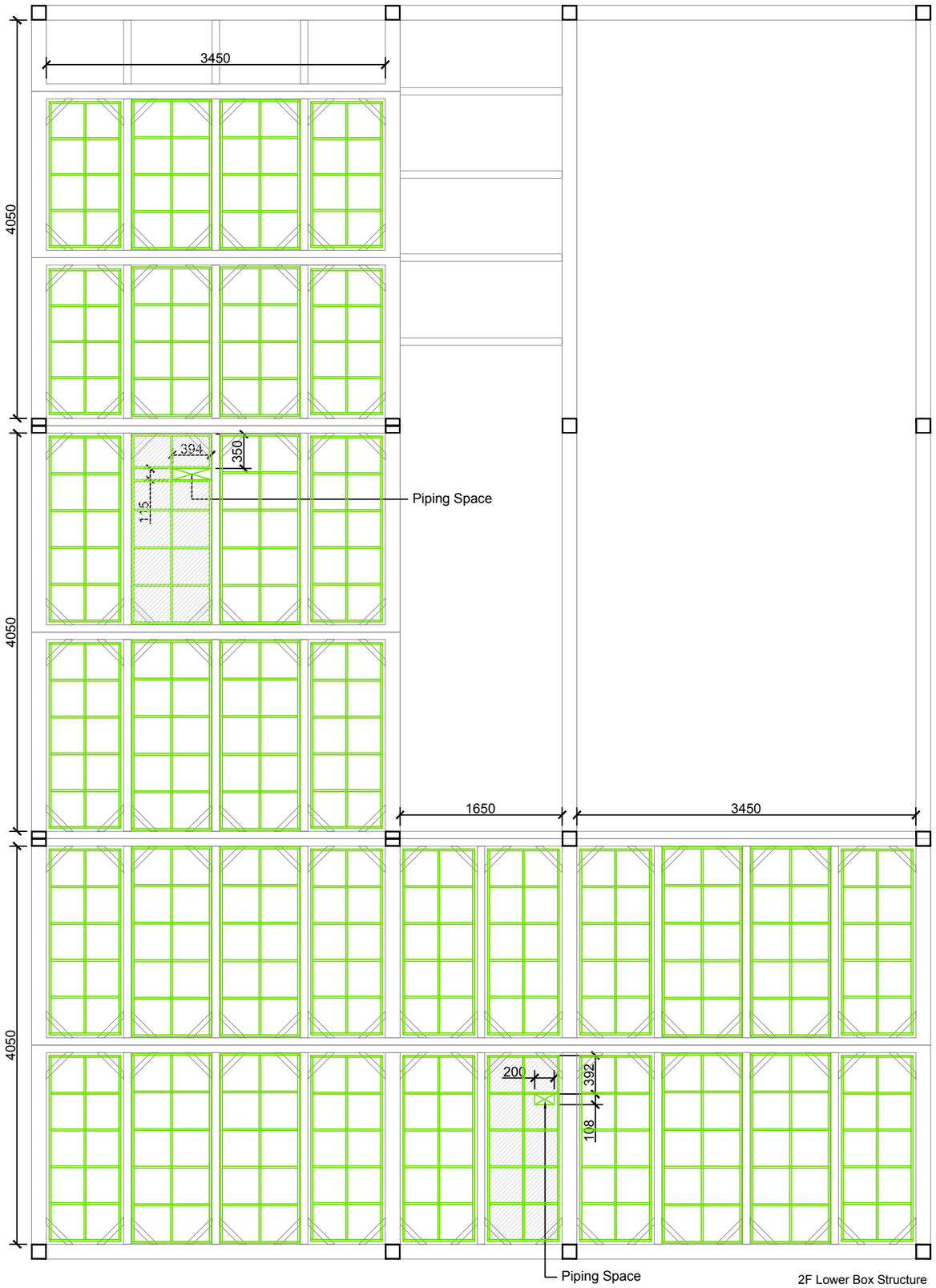

2F Lower Box Structure

1

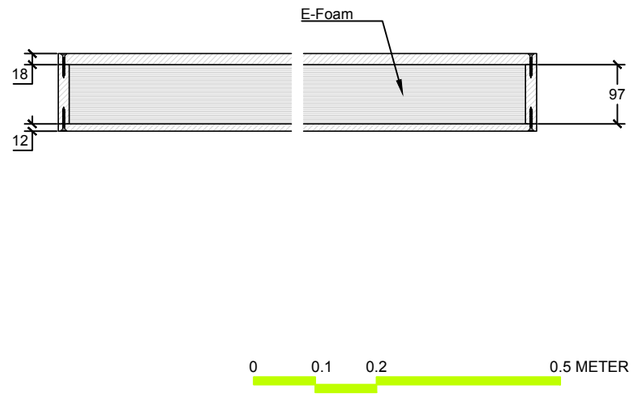

2

Special Module

0 0.5 1 2 METER

Solar Decathlon Europe

Project: ORCHID HOUSE

Institution: 國立交通大學 National Chiao Tung University

NCTU Architecture 國立交通大學建築研究所

Team Name: NCTU/UNICODE

Address: 1001 Ta-Hsueh Road
Hsinchu City 30010
Taiwan

Contact: www.sde.tw

Consultants:

Note:

N

Mark	Date	Description
DN	2013/04/01	SD Submission
DN	2013/07/01	DDc Submission
ST	2013/11/01	DD Submission
ST	2014/03/03	CD Submission
ST	2014/04/30	CD Submission
ST	2014/06/02	CD Submission

Drawn by	CF
Checked by	ST
Scale	1:50
Unit	mm

DWG. Title

FLOOR CONSTRUCTION DETAILS
MEZZANINE LEVEL 2

DWG. No. AR-329

PAGE 57

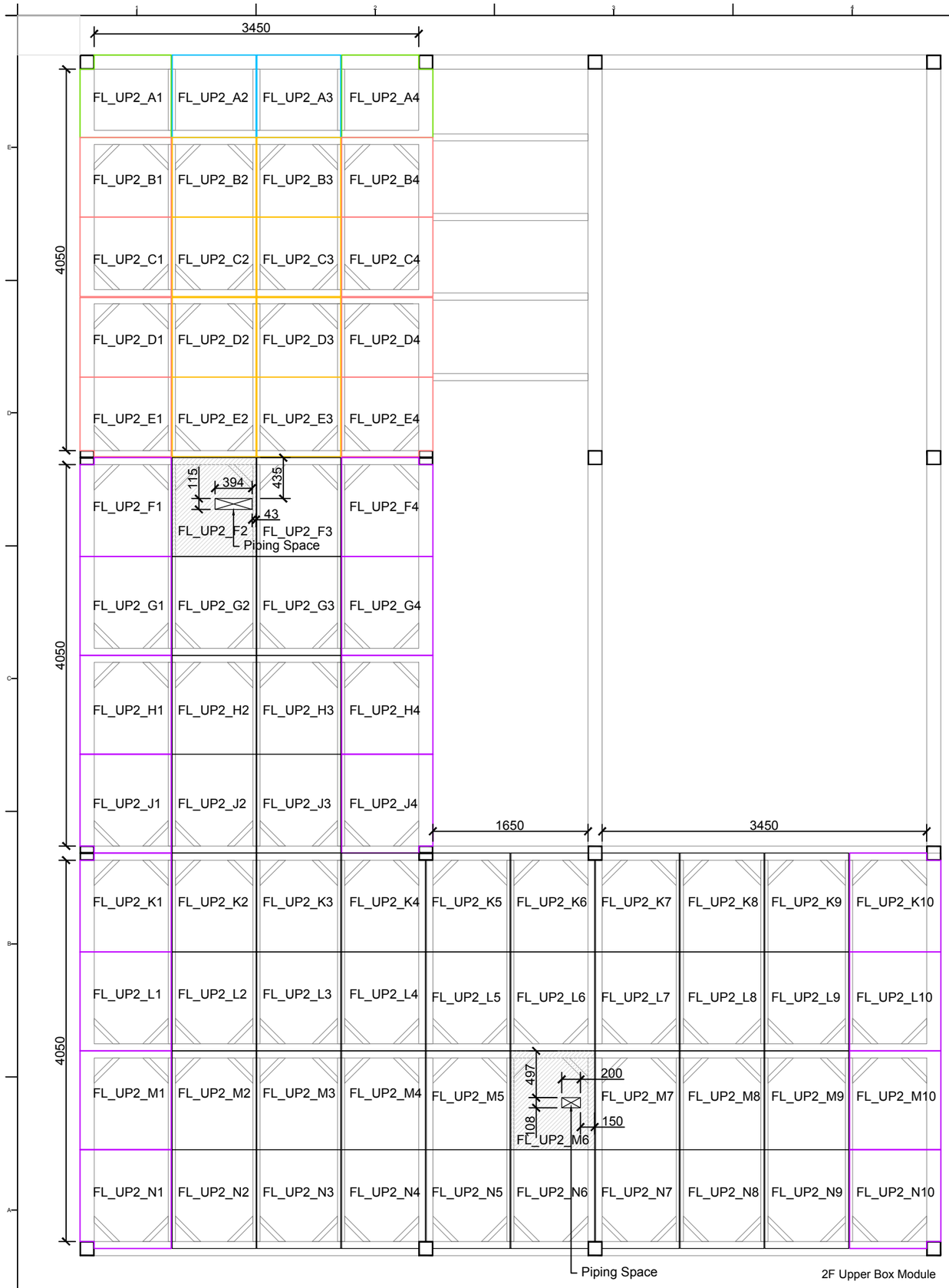

2F Upper Box Module

1

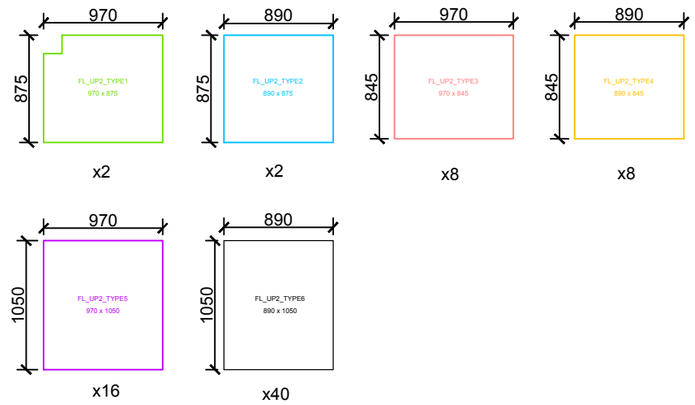

2

Special Module

0 0.5 1 2 METER

Solar Decathlon Europe

Project: ORCHID HOUSE

Institution: 國立交通大學 National Chiao Tung University

NCTU Architecture 國立交通大學建築研究所

Team Name: NCTU/UNICODE

Address: 1001 Ta-Hsueh Road Hsinchu City 30010 Taiwan

Contact: www.sde.tw

Consultants:

Note:

Mark	Date	Description
DN	2013/04/01	SD Submission
DN	2013/07/01	DDc Submission
ST	2013/11/01	DD Submission
ST	2014/03/03	CD Submission
ST	2014/04/30	CD Submission
ST	2014/06/02	CD Submission

Drawn by	CF
Checked by	ST
Scale	1:50
Unit	mm

DWG. Title

FLOOR CONSTRUCTION DETAILS MEZZANINE LEVEL 3

DWG. No. AR-330

PAGE 58

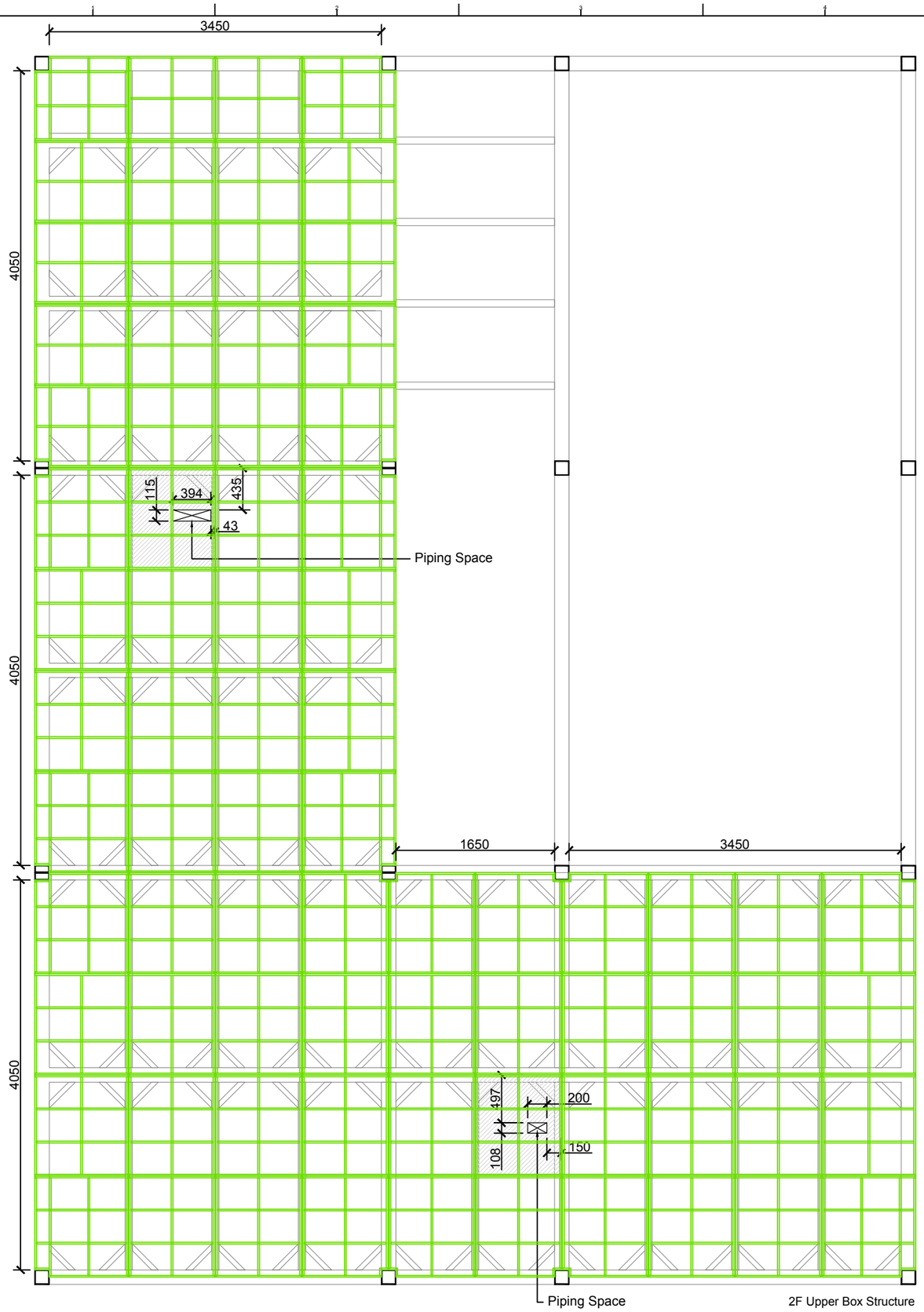

1

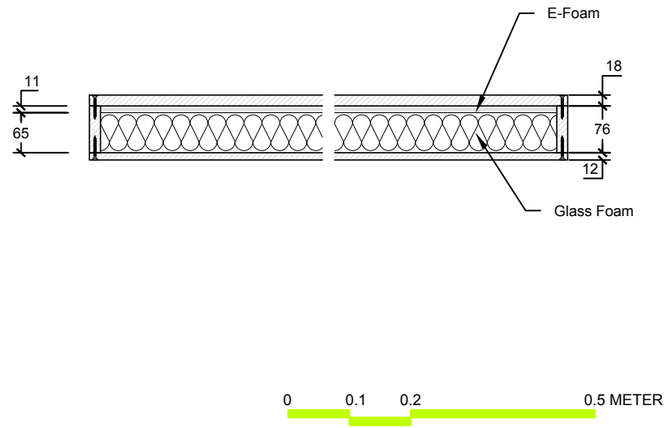

2

Special Module

0 0.5 1 2 METER

Solar Decathlon Europe

Project: ORCHID HOUSE

Institution: 國立交通大學 National Chiao Tung University

NCTU Architecture 國立交通大學建築研究所

Team Name: NCTU/UNICODE

Address: 1001 Ta-Hsueh Road Hsinchu City 30010 Taiwan

Contact: www.sde.tw

Consultants:

Note:

Mark	Date	Description
DN	2013/04/01	SD Submission
DN	2013/07/01	DDc Submission
ST	2013/11/01	DD Submission
ST	2014/03/03	CD Submission
ST	2014/04/30	CD Submission
ST	2014/06/02	CD Submission

Drawn by	CF
Checked by	ST
Scale	1:50
Unit	mm

DWG. Title: FLOOR CONSTRUCTION DETAILS

DWG. No. AR-331

PAGE 59

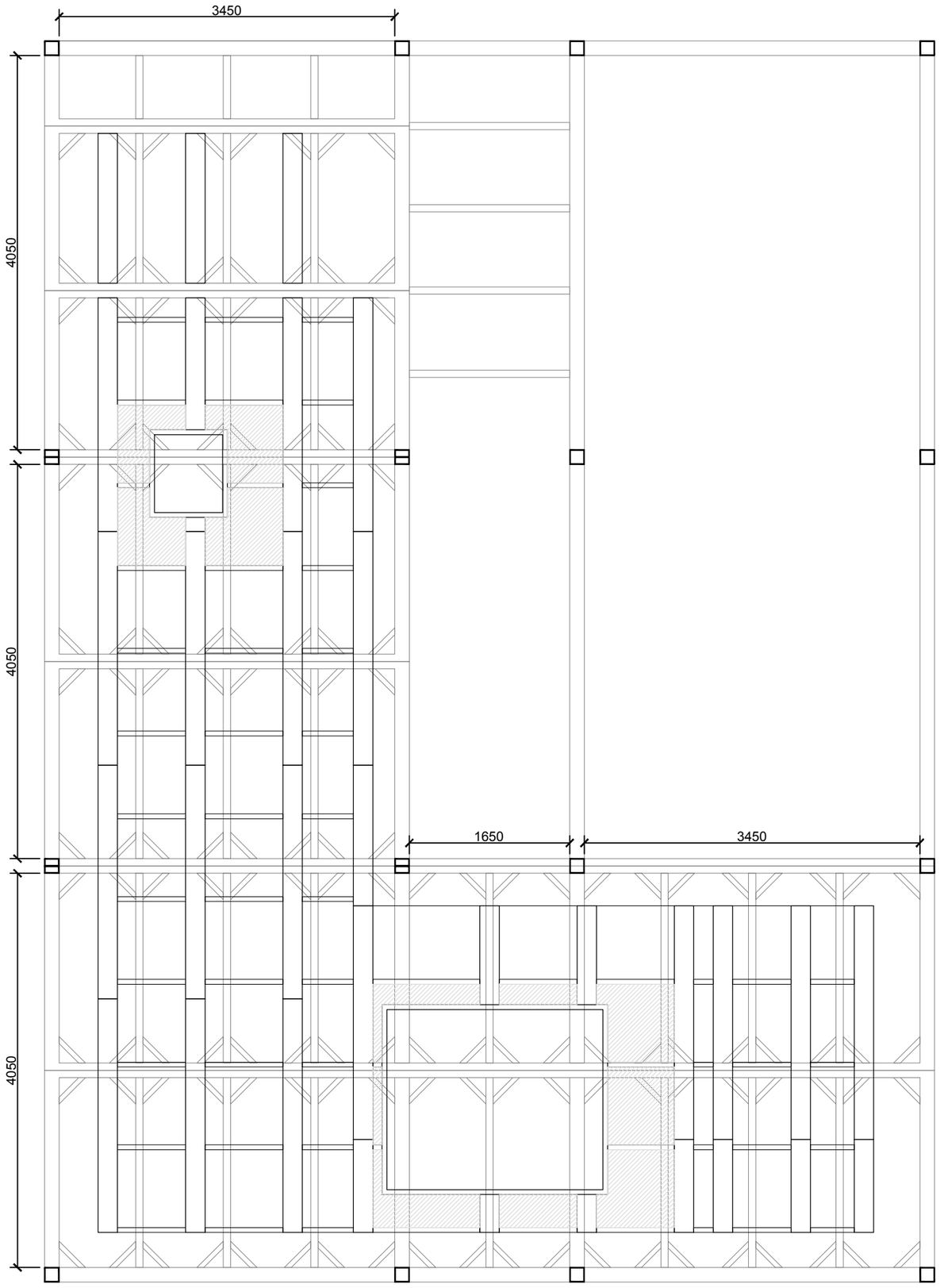

Ceiling Structure and Module

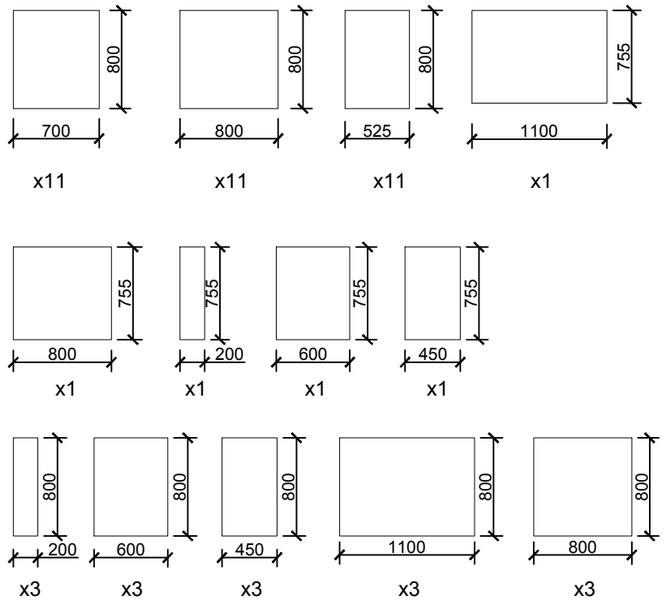

Special Module

0 0.5 1 2 METER

Solar Decathlon Europe

Project: ORCHID HOUSE

Institution: 國立交通大學 National Chiao Tung University

NCTU Architecture 國立交通大學建築研究所

Team Name: NCTU/UNICODE

Address: 1001 Ta-Hsueh Road Hsinchu City 30010 Taiwan

Contact: www.sde.tw

Consultants:

Note:

Mark	Date	Description
DN	2013/04/01	SD Submission
DN	2013/07/01	DDc Submission
ST	2013/11/01	DD Submission
ST	2014/03/03	CD Submission
ST	2014/04/30	CD Submission
ST	2014/06/02	CD Submission

Drawn by	CF
Checked by	ST
Scale	1:50
Unit	mm

DWG. Title: CEILING CONSTRUCTION DETAILS

DWG. No. AR-332

PAGE 60

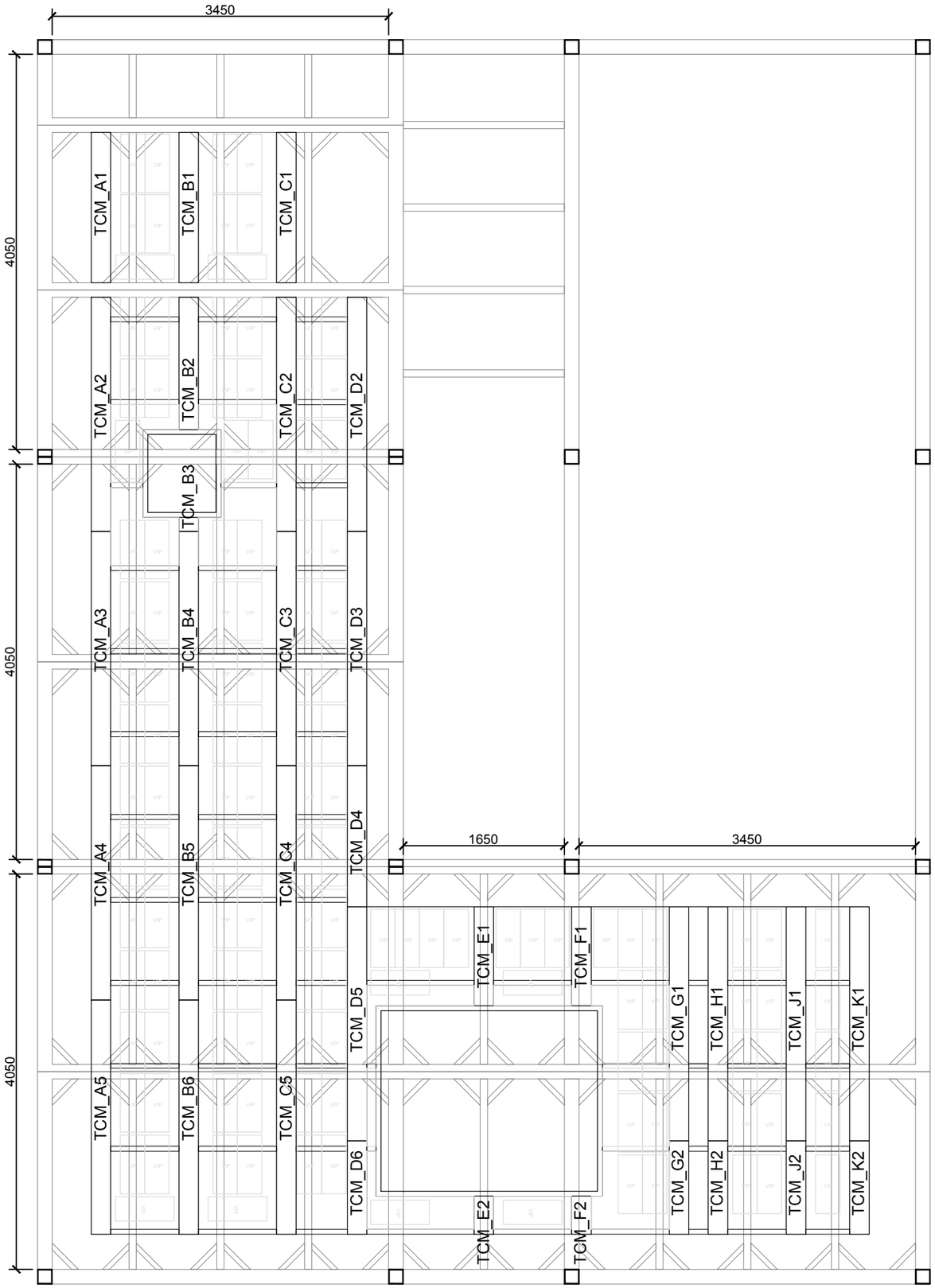

Ceiling Module and VIP

1

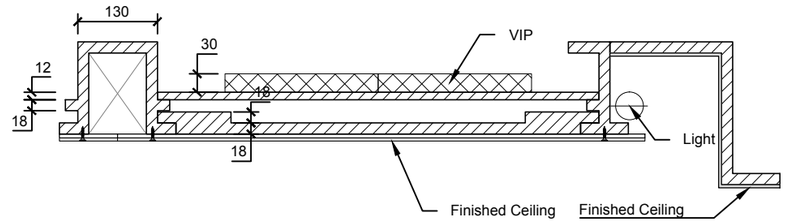

0 0.1 0.2 0.5 METER

2

0 0.5 1 2 METER

Solar Decathlon Europe

Project: ORCHID HOUSE

Institution: 國立交通大學 National Chiao Tung University

NCTU Architecture 國立交通大學建築研究所

Team Name: NCTU/UNICODE

Address: 1001 Ta-Hsueh Road
Hsinchu City 30010
Taiwan

Contact: www.sde.tw

Consultants:

Note:

Mark	Date	Description
DN	2013/04/01	SD Submission
DN	2013/07/01	DDc Submission
ST	2013/11/01	DD Submission
ST	2014/03/03	CD Submission
ST	2014/04/30	CD Submission
ST	2014/06/02	CD Submission

Drawn by	CF
Checked by	ST
Scale	1:50
Unit	mm

DWG. Title
CEILING CONSTRUCTION DETAILS

DWG. No. AR-333

PAGE 61

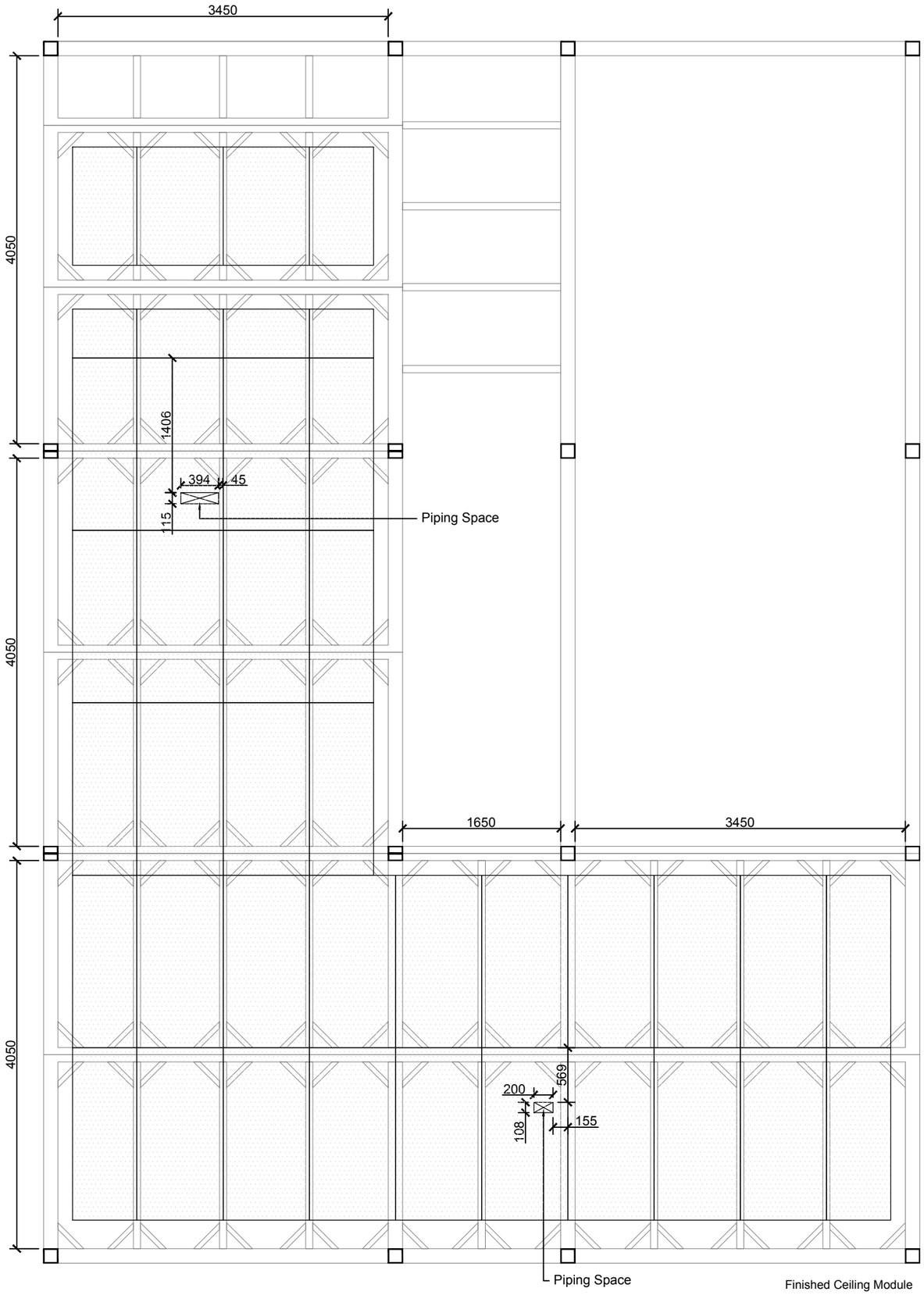

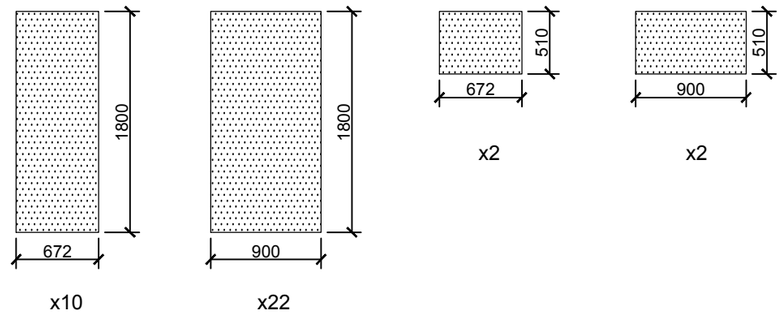

2

1

0 0.5 1 2 METER

Solar Decathlon Europe

Project: ORCHID HOUSE

Institution: 國立交通大學 National Chiao Tung University

NCTU Architecture 國立交通大學建築研究所

Team Name: NCTU/UNICODE

Address: 1001 Ta-Hsueh Road Hsinchu City 30010 Taiwan

Contact: www.sde.tw

Consultants:

Note:

N

Mark	Date	Description
DN	2013/04/01	SD Submission
DN	2013/07/01	DDc Submission
ST	2013/11/01	DD Submission
ST	2014/03/03	CD Submission
ST	2014/04/30	CD Submission
ST	2014/06/02	CD Submission

Drawn by	CF
Checked by	ST
Scale	1:50
Unit	mm

DWG. Title: CEILING CONSTRUCTION DETAILS

DWG. No. AR-334

PAGE 62

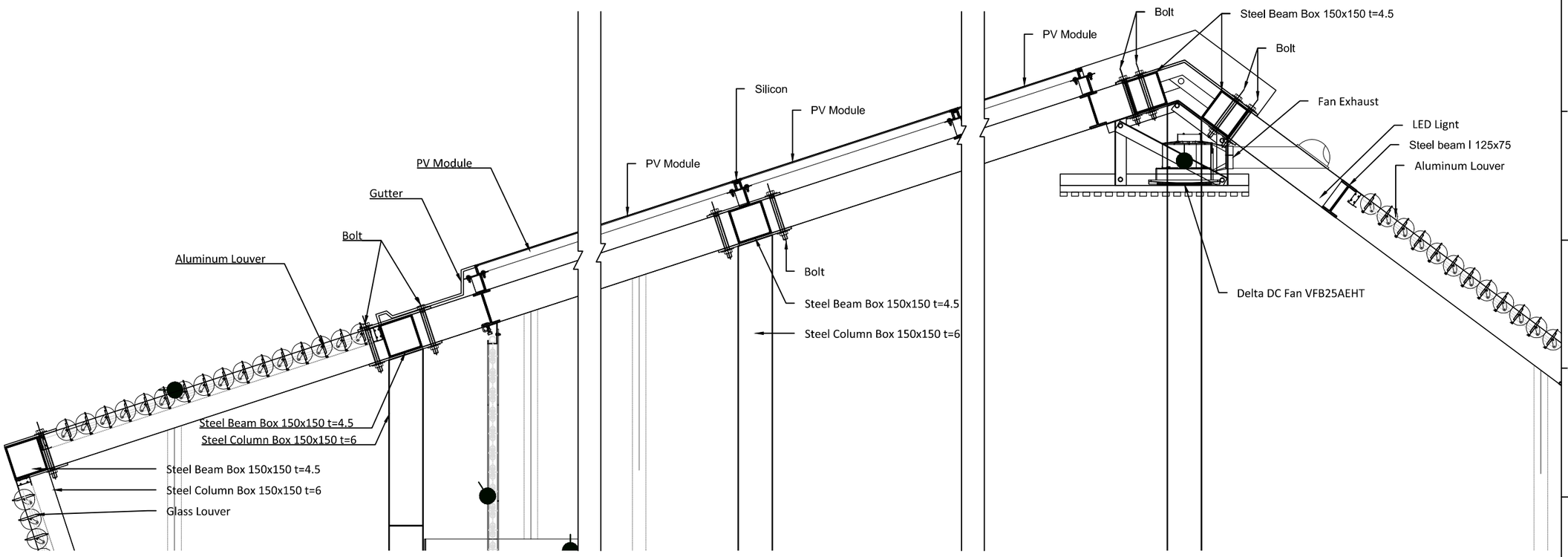

1

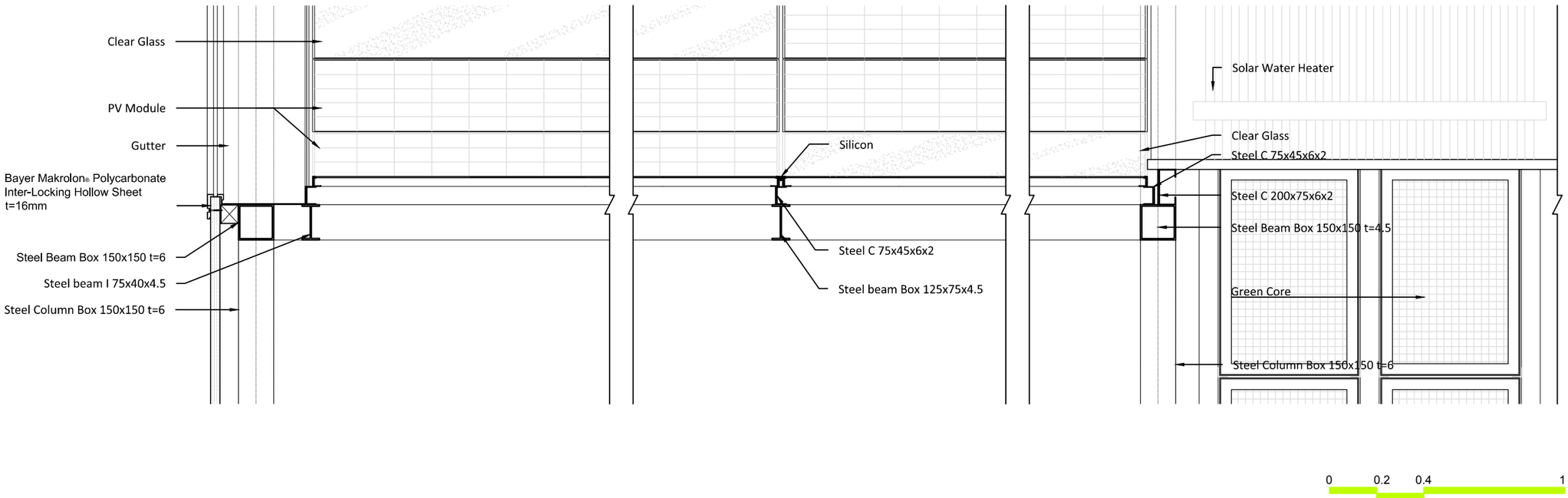

2

Solar Decathlon Europe

Project: ORCHID HOUSE

Institution: 國立交通大學 National Chiao Tung University

NCTU Architecture 國立交通大學建築研究所

Team Name: NCTU/UNICODE

Address: 1001 Ta-Hsueh Road
Hsinchu City 30010
Taiwan

Contact: www.sde.tw

Consultants:

Note:

Mark	Date	Description
DN	2013/04/01	SD Submission
DN	2013/07/01	DDc Submission
ST	2013/11/01	DD Submission
ST	2014/03/03	CD Submission
ST	2014/04/30	CD Submission
ST	2014/06/02	CD Submission

Drawn by	ST
Checked by	DN
Scale	1:20
Unit	mm

DWG. Title

ROOF CONSTRUCTION DETAILS

DWG. No. AR-336

PAGE 63

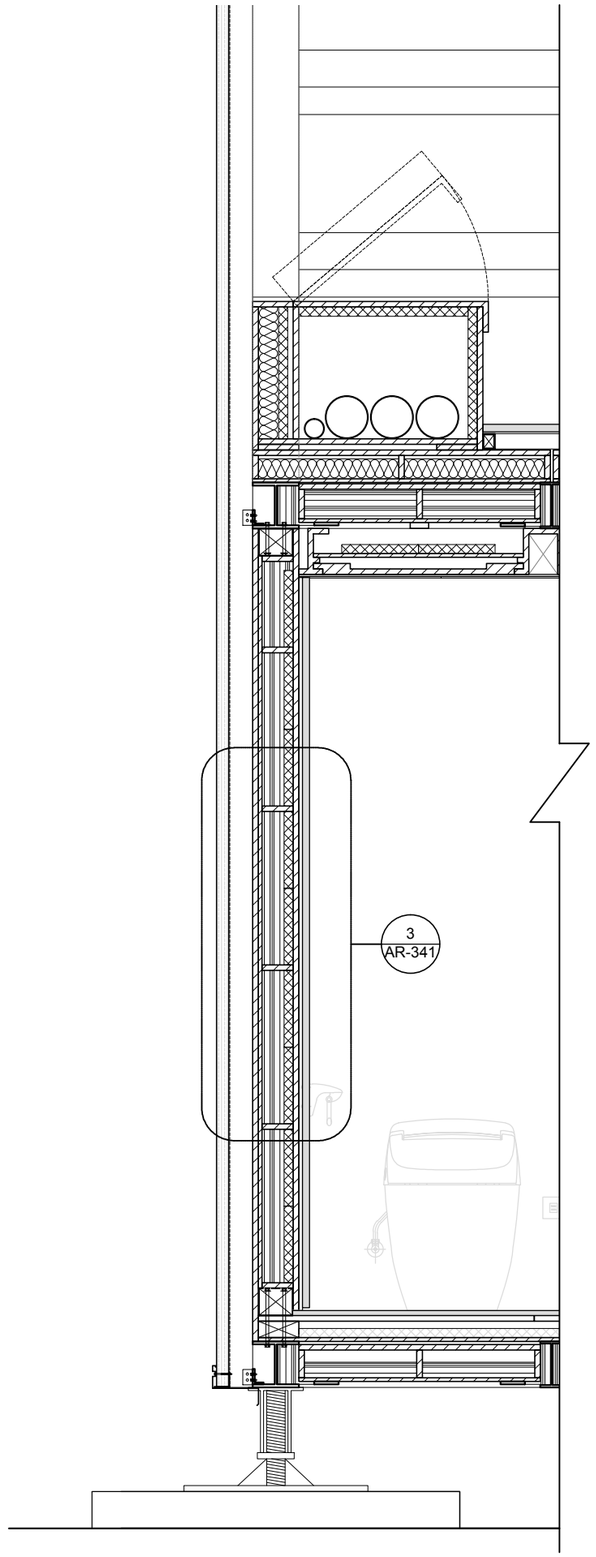

0 0.2 0.4 1 METER

1

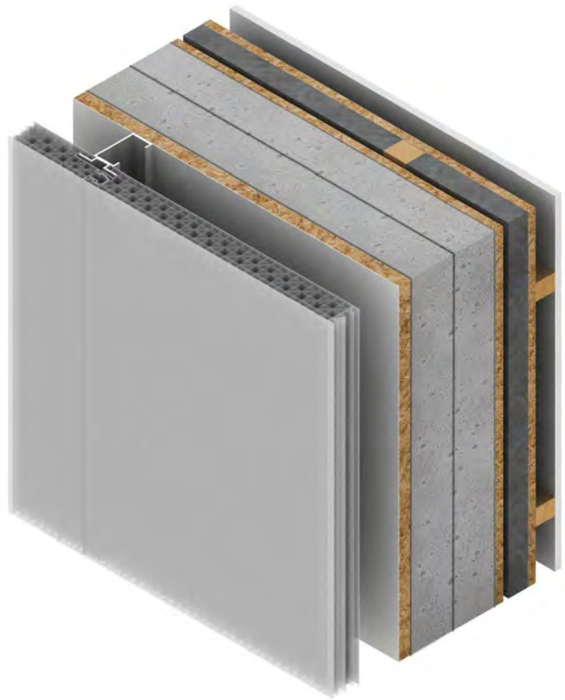

2

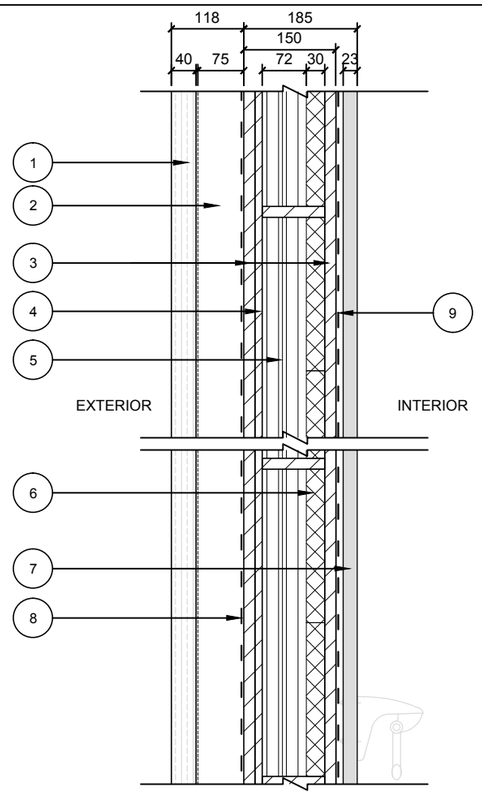

1 Bayer Makrolon® Polycarbonate Inter-locking Hollow Sheet t=40mm
2 Inter-locking Sheet supporting 75mm
3 Plywood 18mm
4 Plywood 12mm
5 Glass foam 72mm
6 Vacuum Insulation 30mm
7 Ceramics board 23mm
8 Waterproofing 1mm
9 Vapor barrier 1mm

Thermal conductivity R = 13.5 (m²K/W)

0 0.1 0.2 0.5 METER

3

Solar Decathlon Europe

Project: ORCHID HOUSE

Institution: 國立交通大學 National Chiao Tung University

NCTU Architecture 國立交通大學建築研究所

Team Name: NCTU/UNICODE
Address: 1001 Ta-Hsueh Road Hsinchu City 30010 Taiwan
Contact: www.sde.tw

Consultants:

Note:

Mark	Date	Description
DN	2013/04/01	SD Submission
DN	2013/07/01	DDc Submission
ST	2013/11/01	DD Submission
ST	2014/03/03	CD Submission
ST	2014/04/30	CD Submission
ST	2014/06/02	CD Submission

Drawn by	CH
Checked by	DN
Scale	1:10
Unit	mm

DWG. Title: WALL SECTION AND CONSTRUCTION DETAILS 1

DWG. No. AR-341

PAGE 64

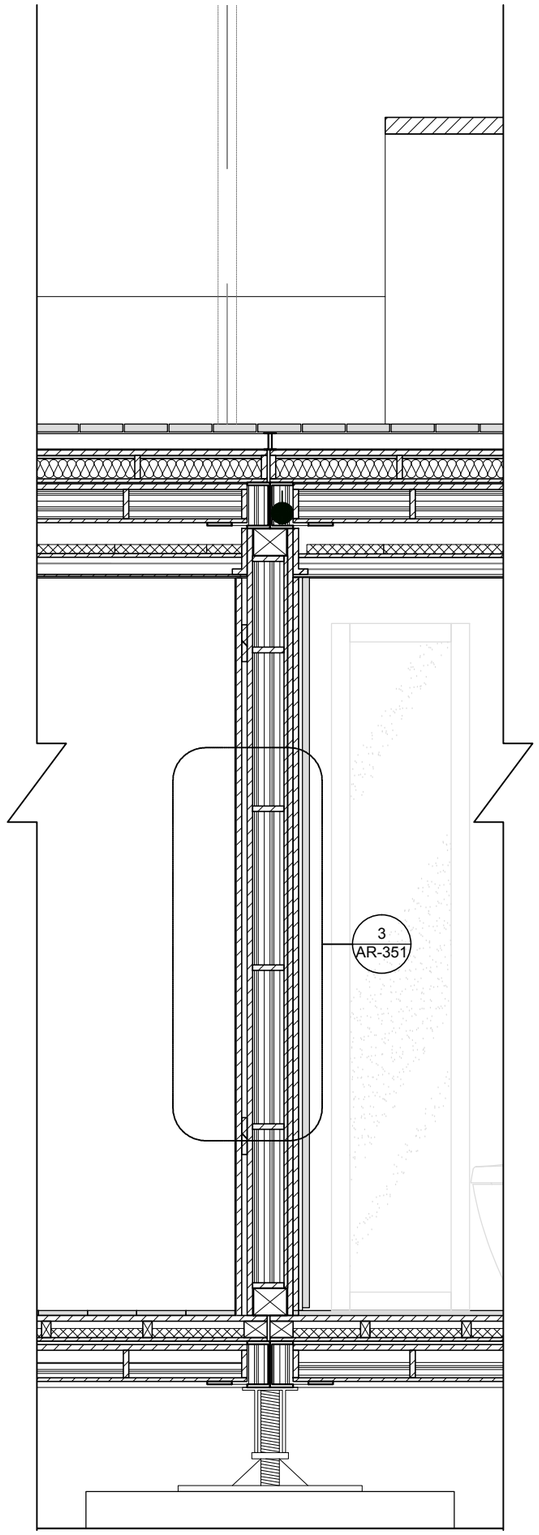

0 0.2 0.4 1 METER

1

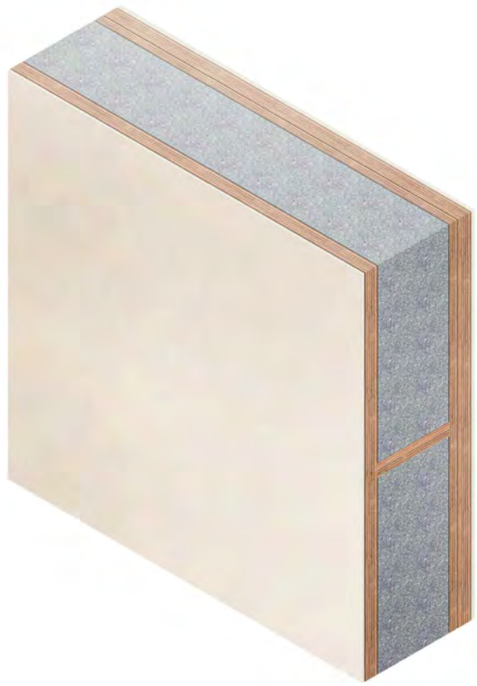

2

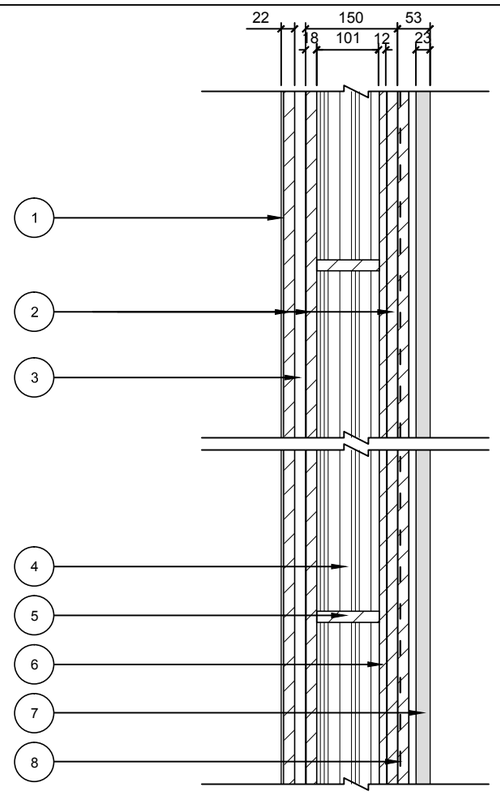

1 Interior finish 3mm
2 Plywood 18mm
3 Air gap 18mm
4 E-foam 100mm
5 Wood framing 18mm*100mm
6 Plywood 12mm
7 Ceramic board 23mm
8 Waterproofing 1mm

0 0.1 0.2 0.5 METER

3

Solar Decathlon Europe

Project: ORCHID HOUSE

Institution: 國立交通大學 National Chiao Tung University

NCTU Architecture 國立交通大學建築研究所

Team Name: NCTU/UNICODE
Address: 1001 Ta-Hsueh Road
Hsinchu City 30010
Taiwan
Contact: www.sde.tw

Consultants:

Note:

Mark	Date	Description
DN	2013/04/01	SD Submission
DN	2013/07/01	DDc Submission
ST	2013/11/01	DD Submission
ST	2014/03/03	CD Submission
ST	2014/04/30	CD Submission
ST	2014/06/02	CD Submission

Drawn by	CH
Checked by	DN
Scale	1:10
Unit	mm

DWG. Title: PARTITION DETAILS

DWG. No. AR-351

PAGE 65

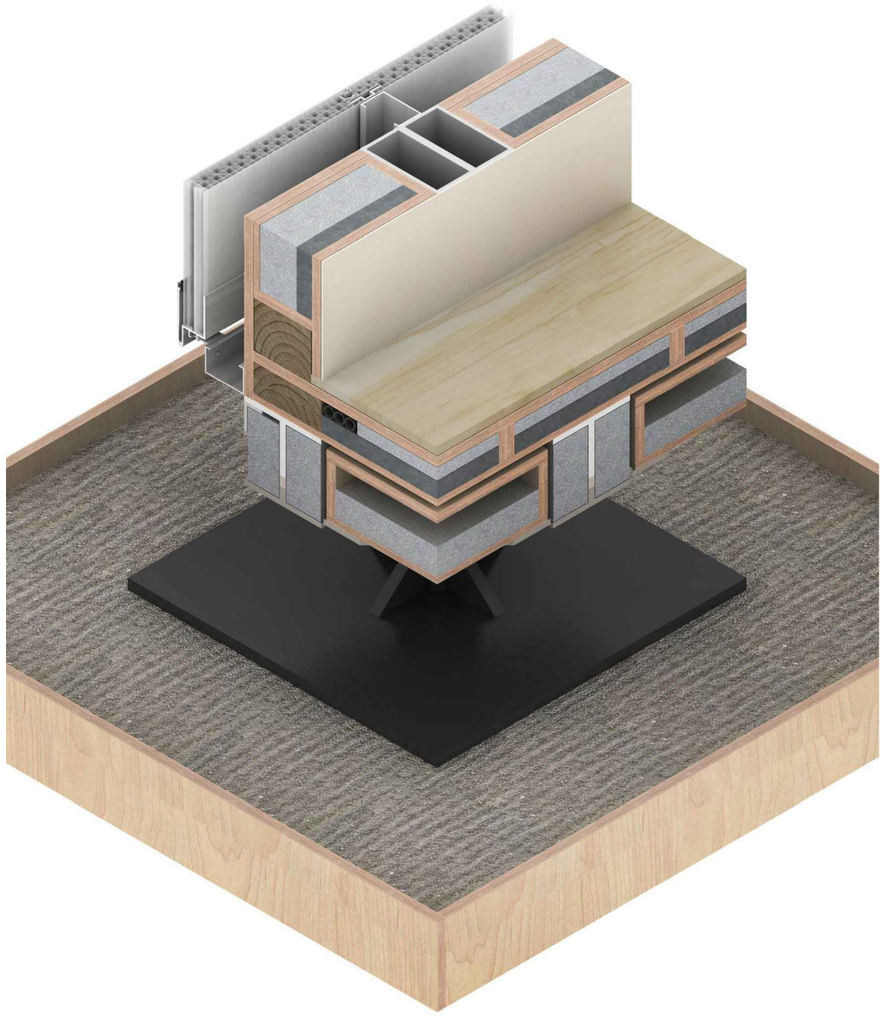

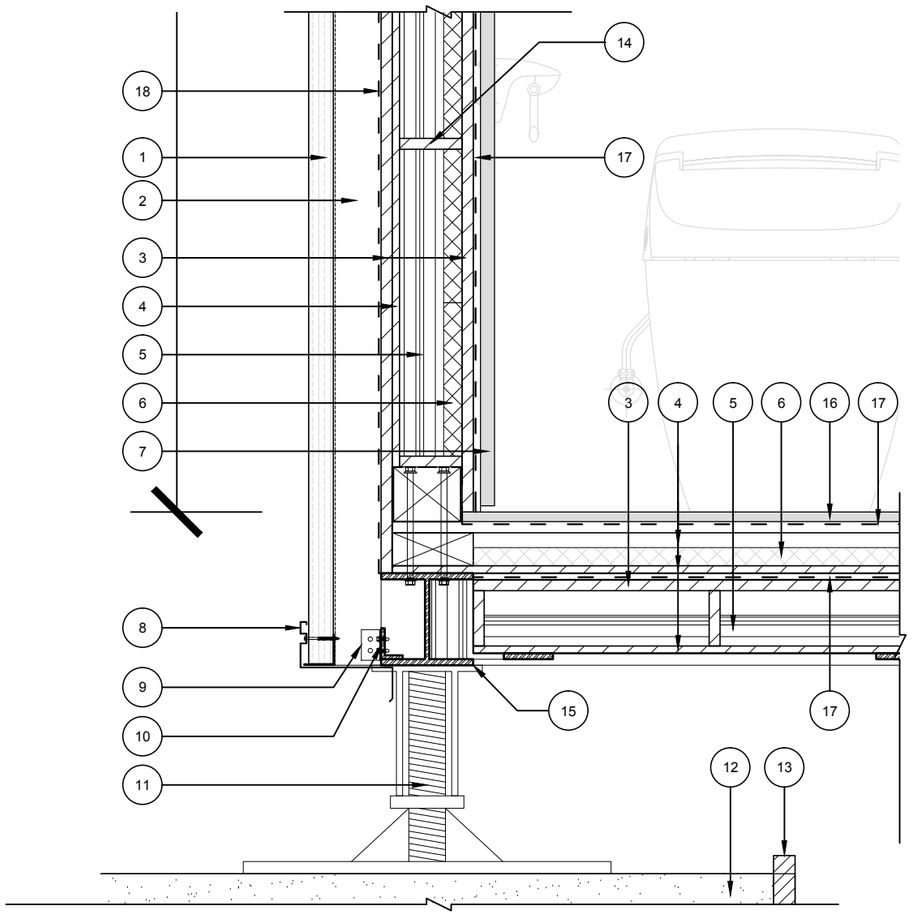

1 Bayer Makrolon® Polycarbonate Inter-locking Hollow Sheet t=40mm

2 Inter-locking Sheet supporting 75mm

3 Plywood 18mm

4 Plywood 12mm

5 E-foam 70mm

6 Vacuum Insulation 30mm

7 Ceramic board 23mm

8 Steel enclosure 1mm

9 L shape steel -30x30 t=2.3mm

10 L shape steel -50x35 t=6mm

11 Footing

12 Sand

13 Wood frame (sand box)

14 Wood frame (wall)

15 H -150x150 t=10mm

16 Wood Plastic Composites 25mm

17 Vapor barrier 1mm

18 Waterproofing 1mm

0 0.1 0.2 0.5 METER

1

2

Solar Decathlon Europe

Project: ORCHID HOUSE

Institution: 國立交通大學 National Chiao Tung University

NCTU Architecture 國立交通大學建築研究所

Team Name: NCTU/UNICODE

Address: 1001 Ta-Hsueh Road Hsinchu City 30010 Taiwan

Contact: www.sde.tw

Consultants:

Note:

Mark	Date	Description
DN	2013/04/01	SD Submission
DN	2013/07/01	DDc Submission
ST	2013/11/01	DD Submission
ST	2014/03/03	CD Submission
ST	2014/04/30	CD Submission
ST	2014/06/02	CD Submission

Drawn by	CH
Checked by	DN
Scale	1:10
Unit	mm

DWG. Title: JOINT DETAIL 1

DWG. No. AR-361

PAGE 66

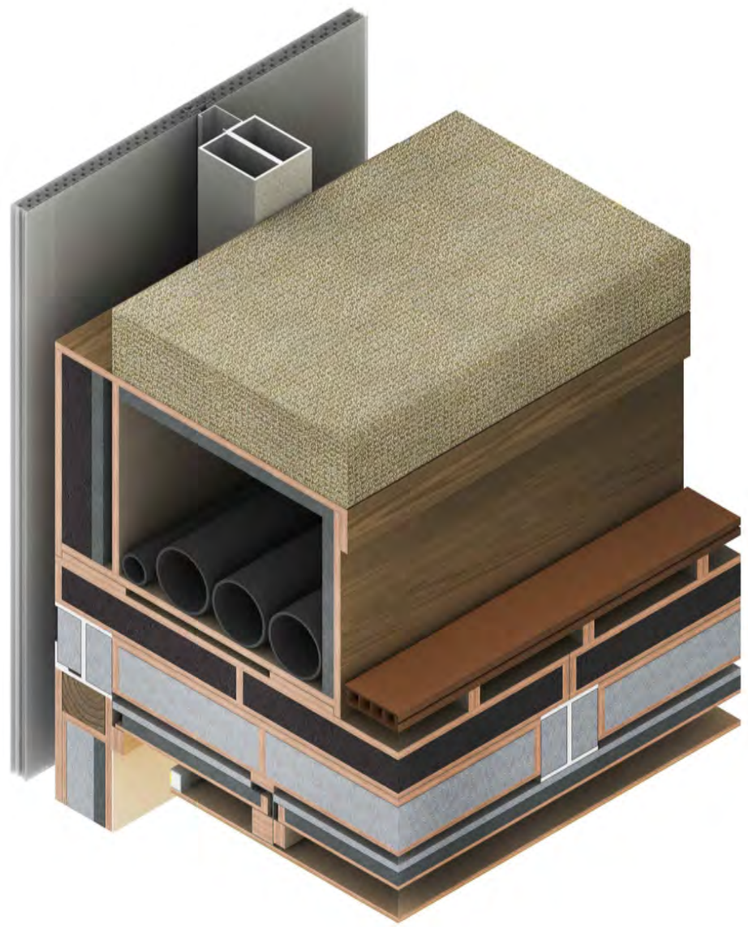

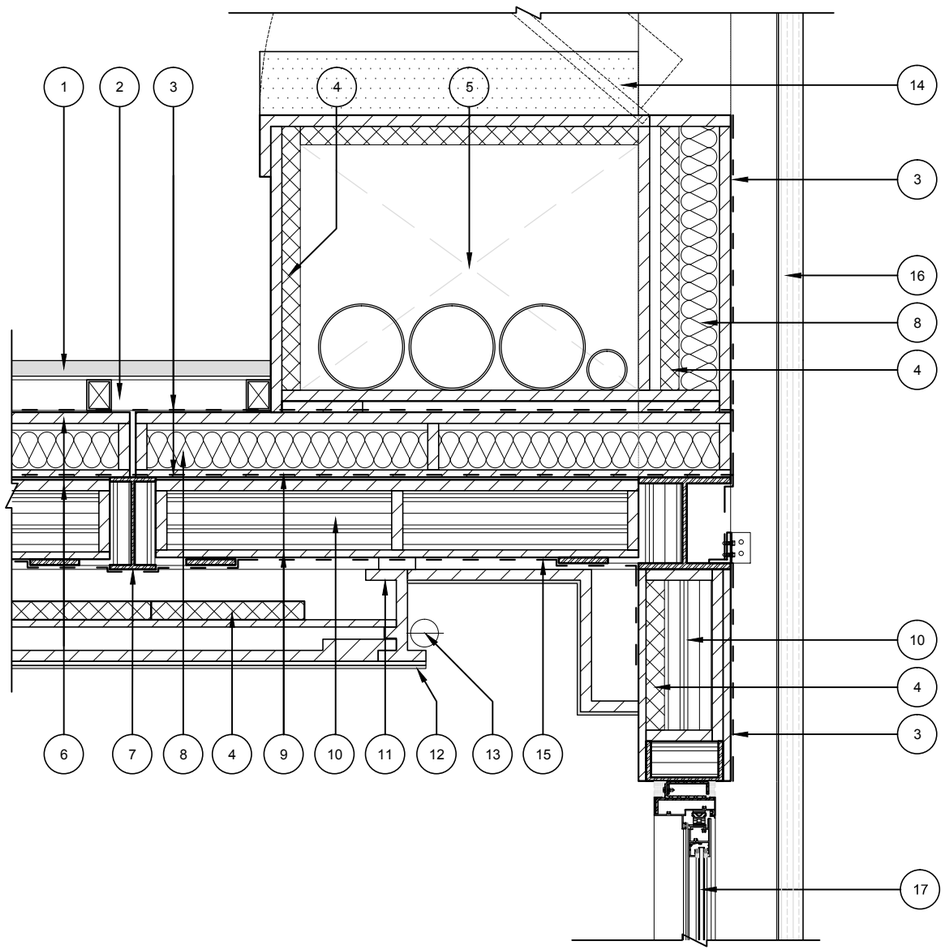

1 Wood Plastic Composites 40mm

2 Air gap 44mm

3 Waterproofing 1mm

4 Vacuum Insulation 30mm

5 Duct

6 Plywood 18mm

7 Sub-beam -150x75 t=7mm

8 Glass foam 65mm

9 Plywood 12mm

10 E-foam 95mm

11 C -120x60x20 t=2.3mm (ceiling system)

12 Ceiling 12mm
(plywood 9mm+ceiling finish 3mm)

13 T5 LED Link Light

14 Soft seat

15 Vapor barrier 1mm

16 Bayer Makrolon® Polycarbonate
Inter-locking Hollow Sheet
t=40mm

17 Bayer Makrolon® Polycarbonate
Hollow Sheet
t=16mm

0 0.1 0.2 0.5 METER

1

2

Solar Decathlon Europe

Project:

ORCHID HOUSE

Institution:

國立交通大學
National Chiao Tung University

NCTU Architecture
國立交通大學建築研究所

Team Name: NCTU/UNICODE

Address: 1001 Ta-Hsueh Road
Hsinchu City 30010
Taiwan

Contact: www.sde.tw

Consultants:

Note:

Mark	Date	Description
DN	2013/04/01	SD Submission
DN	2013/07/01	DDc Submission
ST	2013/11/01	DD Submission
ST	2014/03/03	CD Submission
ST	2014/04/30	CD Submission
ST	2014/06/02	CD Submission

Drawn by	CH
Checked by	DN
Scale	1:10
Unit	mm

DWG. Title

JOINT DETAIL 2

DWG. No. AR-362

PAGE 67

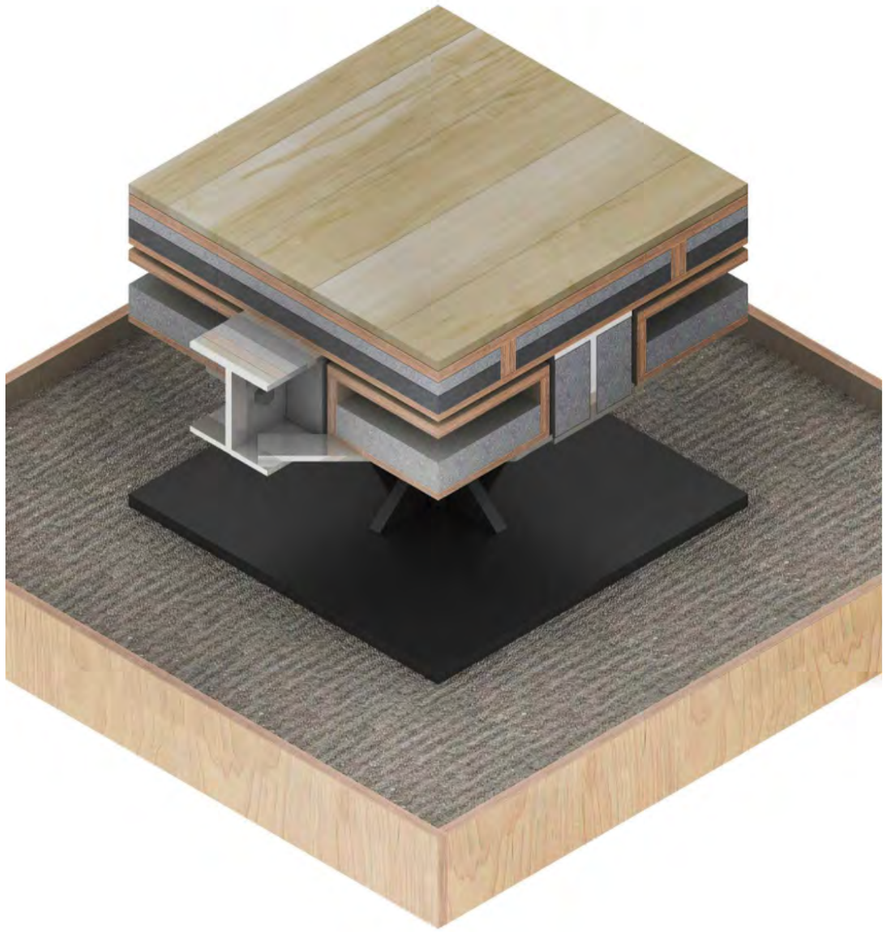

1

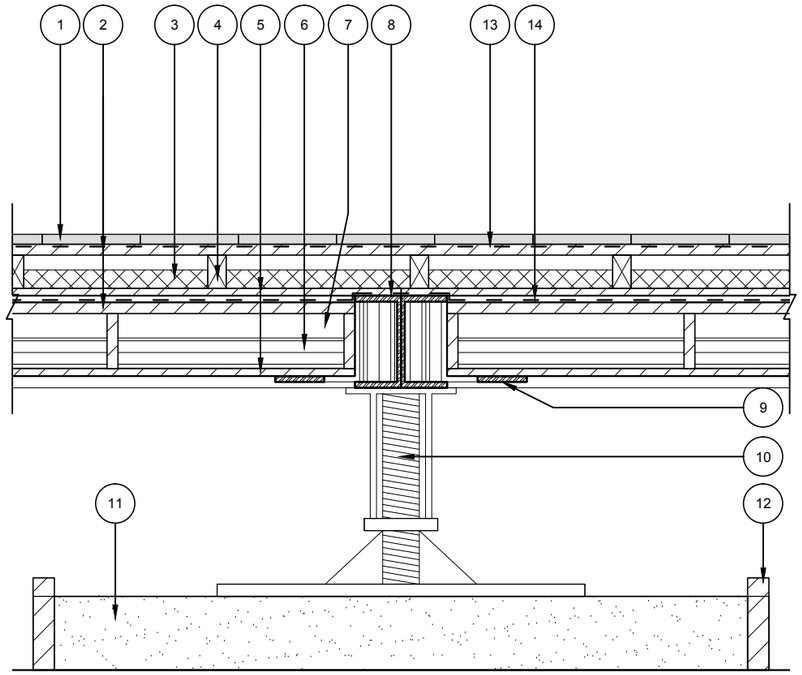

1	Finished Flooring 16mm	8	Beam -C -150x75 t=9.5mm
2	Plywood 18mm	9	Floor supporting
3	Vacuum Insulation 30mm	10	Footing
4	Wood frame 54mm	11	Sand box
5	Plywood 12mm	12	Wood frame
6	E-foam 50mm	13	Waterproofing 1mm
7	Air gap 40mm	14	Vapor barrier 1mm

0 0.1 0.2 0.5 METER

2

Solar Decathlon Europe

Project: ORCHID HOUSE

Institution: 國立交通大學 National Chiao Tung University

NCTU Architecture 國立交通大學建築研究所

Team Name: NCTU/UNICODE

Address: 1001 Ta-Hsueh Road
Hsinchu City 30010
Taiwan

Contact: www.sde.tw

Consultants:

Note:

Mark	Date	Description
DN	2013/04/01	SD Submission
DN	2013/07/01	DDc Submission
ST	2013/11/01	DD Submission
ST	2014/03/03	CD Submission
ST	2014/04/30	CD Submission
ST	2014/06/02	CD Submission

Drawn by	CH
Checked by	YW
Scale	DN
Unit	1:10

DWG. Title

JOINT DETAIL 3

DWG. No. AR-363

PAGE 68

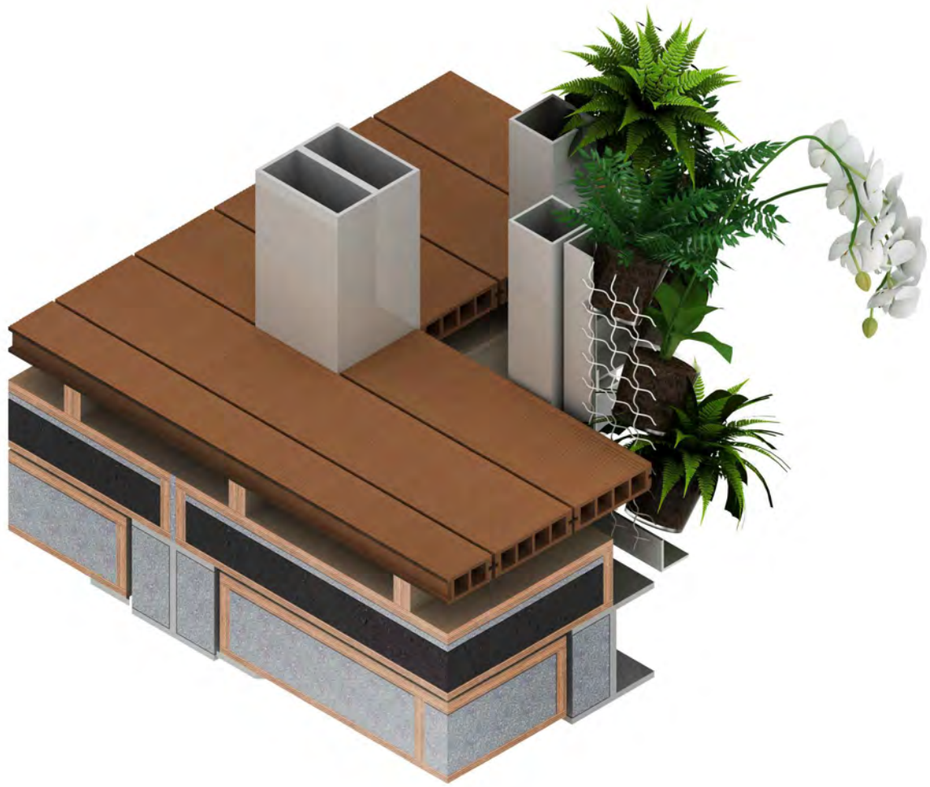

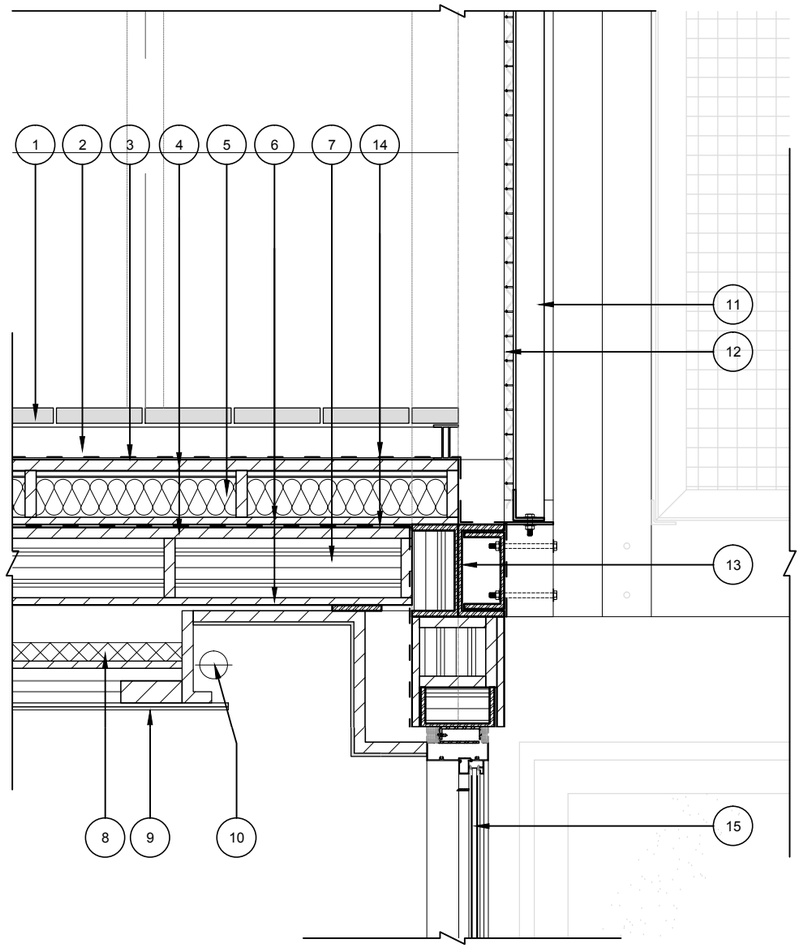

1 Wooden Flooring 40mm

2 Framing 60mm / Air gap 44mm

3 Water proofing 2mm

4 Plywood 18mm

5 Glass foam 65mm

6 Plywood 12mm

7 E-foam 95mm

8 Vacuum Insulation 30mm

9 Ceiling 12mm
(plywood 9mm+ceiling finish 3mm)

10 T5 LED Link Light

11 Green core

12 barbed wire Φ=2mm (for plants supporting)

13 Beam C-150x75 t=9.5mm

14 Waterproofing 1mm

15 Bayer Makrolon® Polycarbonate
Hollow Sheet
t=16mm

0 0.1 0.2 0.5 METER

1

2

Solar Decathlon Europe

Project:

ORCHID HOUSE

Institution:

國立交通大學
National Chiao Tung University

NCTU Architecture
國立交通大學建築研究所

Team Name: NCTU/UNICODE

Address: 1001 Ta-Hsueh Road
Hsinchu City 30010
Taiwan

Contact: www.sde.tw

Consultants:

Note:

Mark	Date	Description
DN	2013/04/01	SD Submission
DN	2013/07/01	DDc Submission
ST	2013/11/01	DD Submission
ST	2014/03/03	CD Submission
ST	2014/04/30	CD Submission
ST	2014/06/02	CD Submission

Drawn by CH

Checked by YW

Scale DN

Unit 1:10

DWG. Title

JOINT DETAIL 4

DWG. No. AR-364

PAGE 69

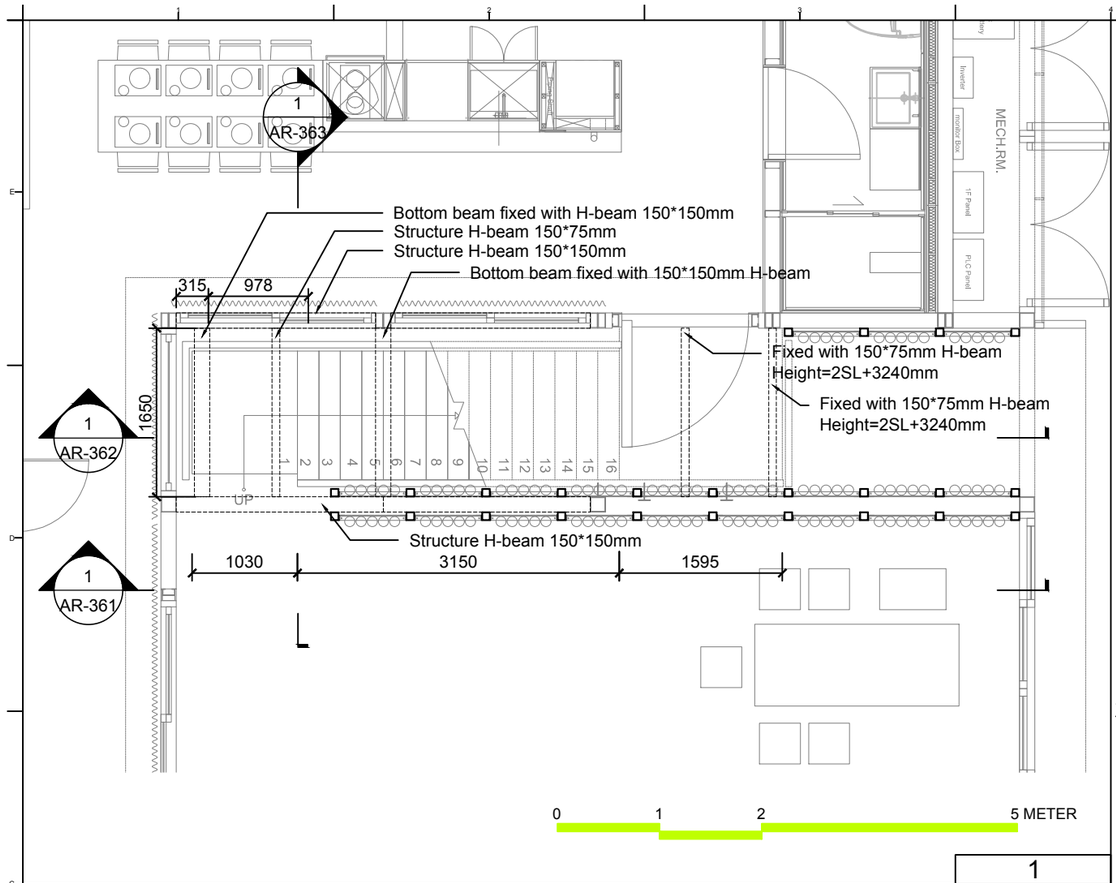

1

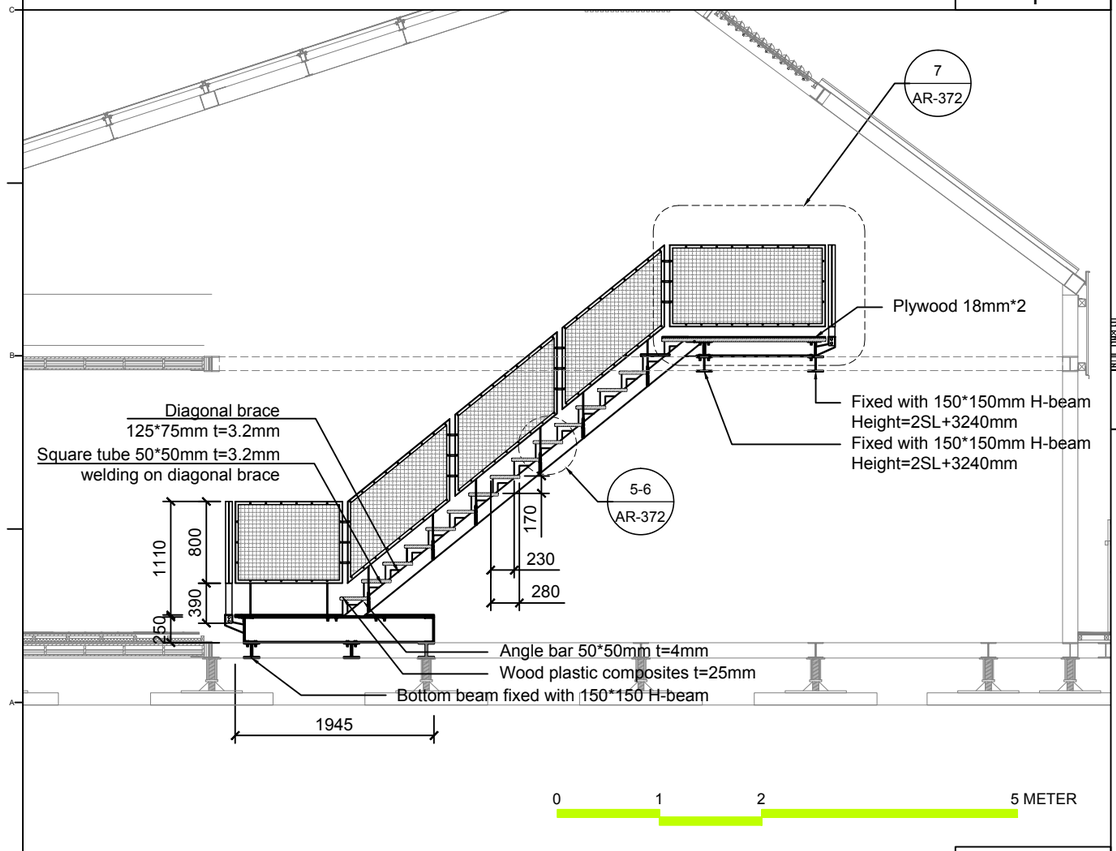

2

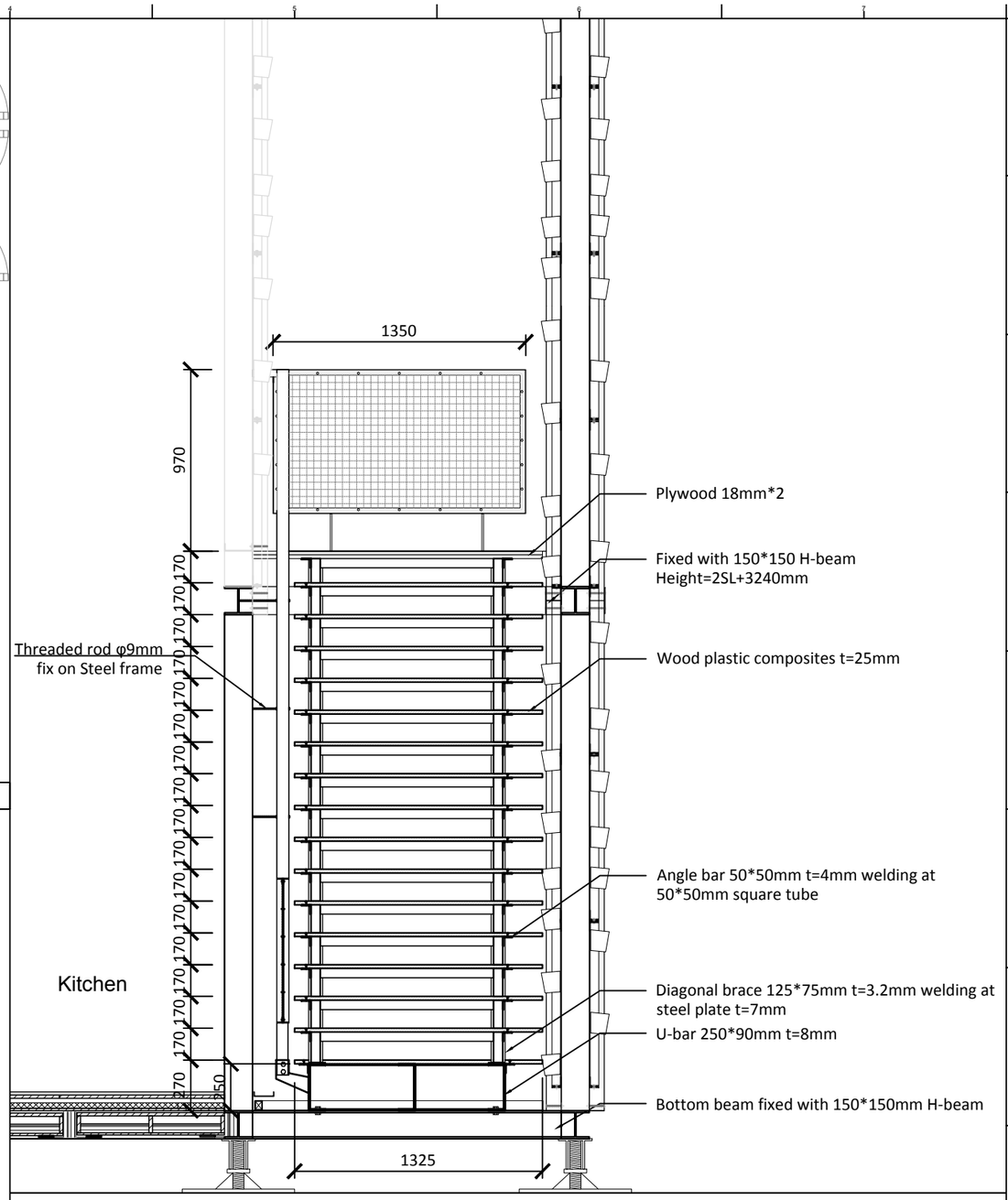

3

Solar Decathlon Europe

Project: ORCHID HOUSE

Institution: 國立交通大學 National Chiao Tung University

NCTU Architecture 國立交通大學建築研究所

Team Name: NCTU/UNICODE

Address: 1001 Ta-Hsueh Road
Hsinchu City 30010
Taiwan

Contact: www.sde.tw

Consultants:

Note:

Mark	Date	Description
DN	2013/04/01	SD Submission
DN	2013/07/01	DDc Submission
ST	2013/11/01	DD Submission
ST	2014/03/03	CD Submission
ST	2014/04/30	CD Submission
ST	2014/06/02	CD Submission

Drawn by	TW
Checked by	DN
Scale	1:60
Unit	mm

DWG. Title: STAIR DETAIL 1

DWG. No.: AR-371

PAGE: 70

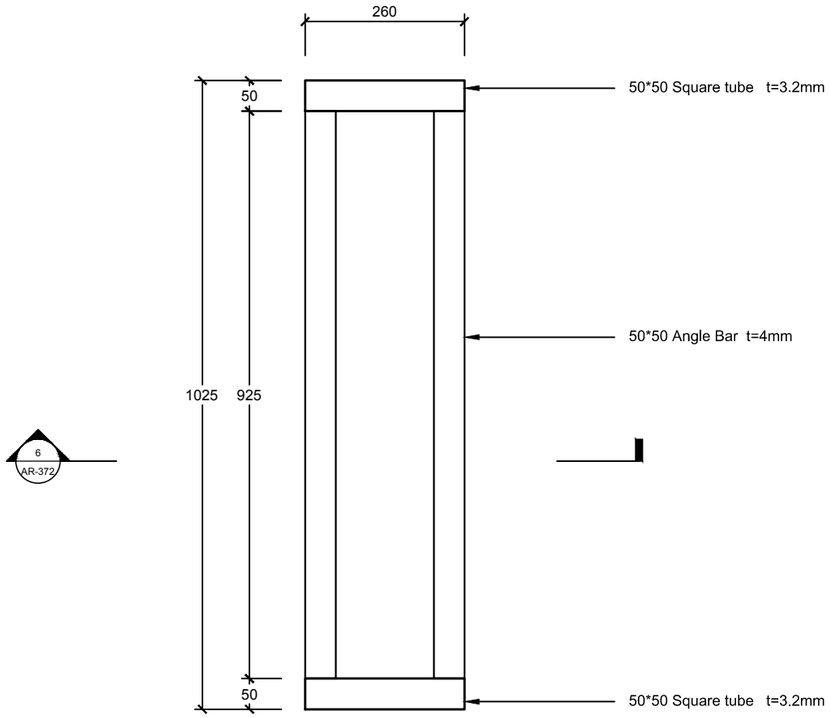

0 0.1 0.2 0.5 METER

5

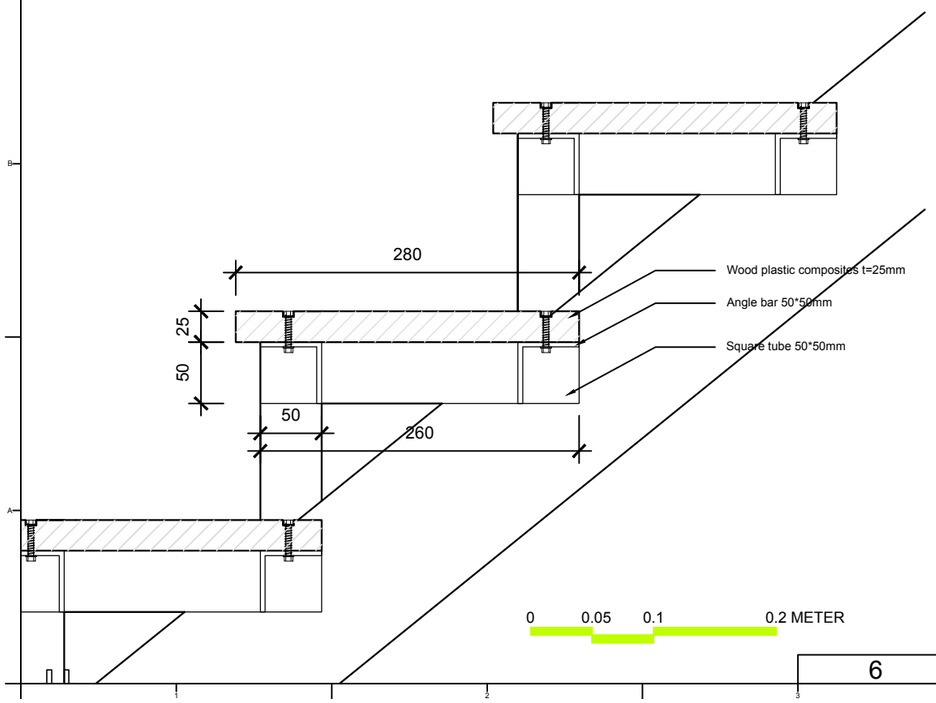

0 0.05 0.1 0.2 METER

6

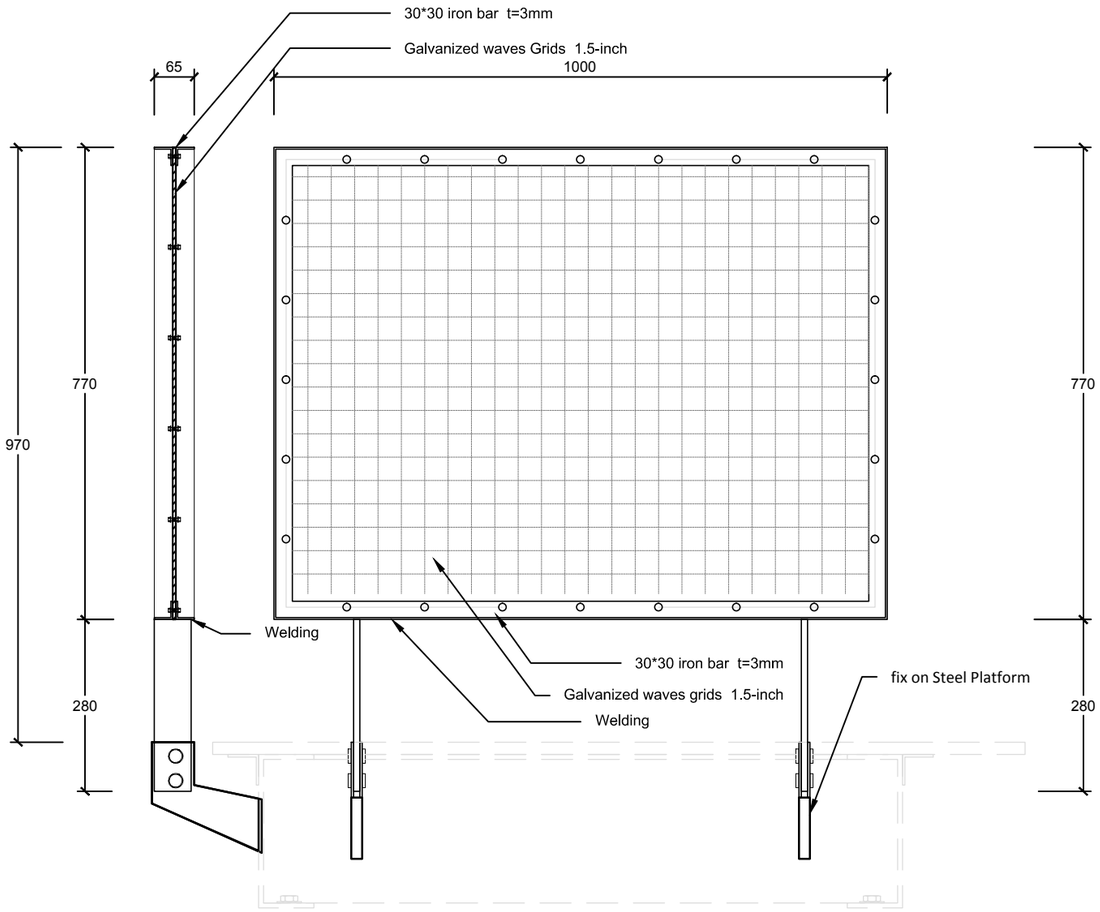

0 0.1 0.2 0.5 METER

7

Solar Decathlon Europe

Project: ORCHID HOUSE

Institution: 國立交通大學 National Chiao Tung University

NCTU Architecture 國立交通大學建築研究所

Team Name: NCTU/UNICODE

Address: 1001 Ta-Hsueh Road Hsinchu City 30010 Taiwan

Contact: www.sde.tw

Consultants:

Note:

Mark	Date	Description
DN	2013/04/01	SD Submission
DN	2013/07/01	DDc Submission
ST	2013/11/01	DD Submission
ST	2014/03/03	CD Submission
ST	2014/04/30	CD Submission
ST	2014/06/02	CD Submission

Drawn by	TW
Checked by	DN
Scale	1:10
Unit	mm

DWG. Title: STAIR DETAIL 2

DWG. No.: AR-372

PAGE: 71

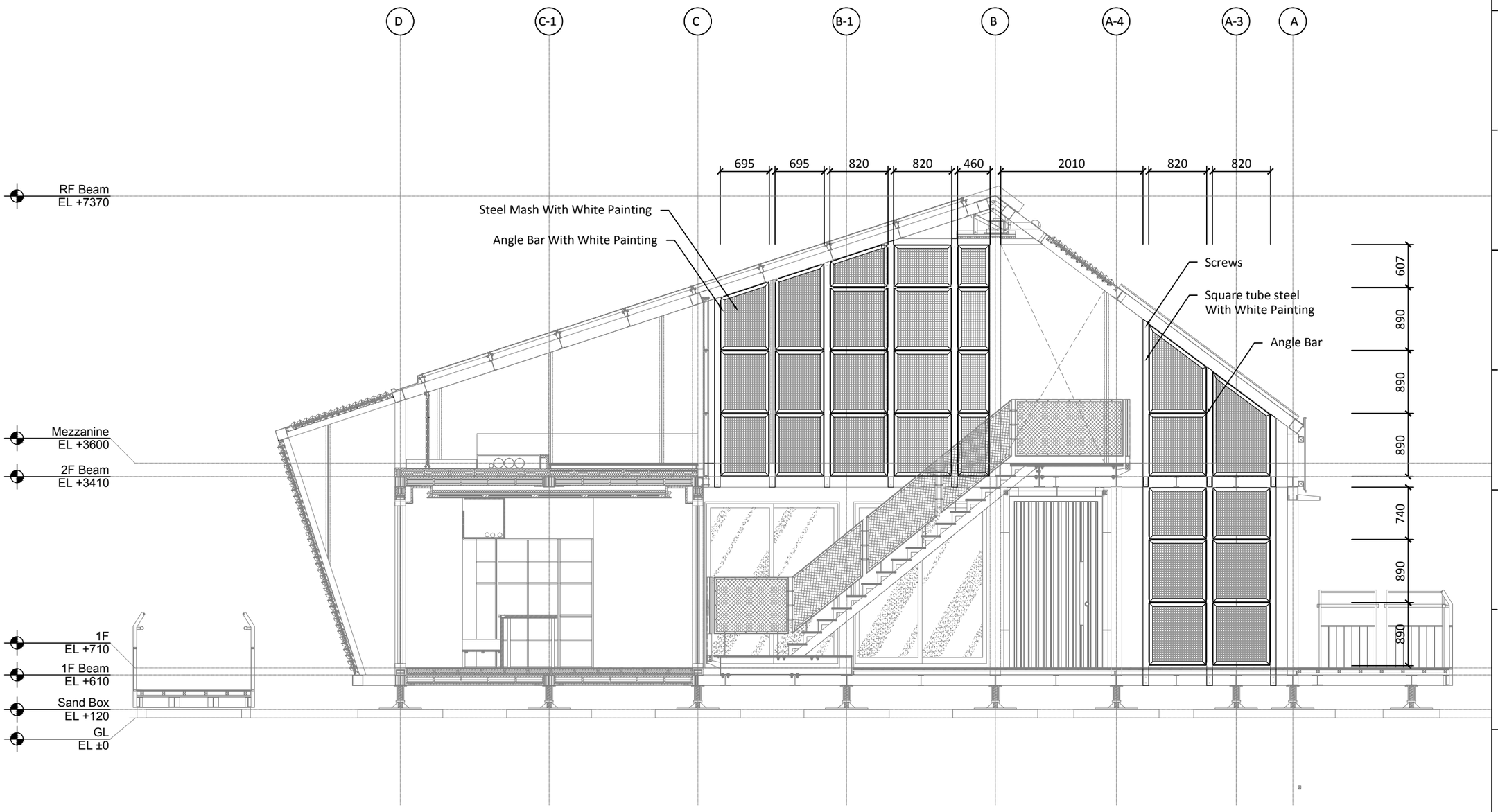

Solar Decathlon Europe

Project: ORCHID HOUSE

Institution: 國立交通大學 National Chiao Tung University

NCTU Architecture 國立交通大學建築研究所

Team Name: NCTU/UNICODE

Address: 1001 Ta-Hsueh Road
Hsinchu City 30010
Taiwan

Contact: www.sde.tw

Consultants:

Note:

N

Mark	Date	Description
DN	2013/04/01	SD Submission
DN	2013/07/01	DDc Submission
ST	2013/11/01	DD Submission
ST	2014/03/03	CD Submission
ST	2014/04/30	CD Submission
ST	2014/06/02	CD Submission

Drawn by	CF
Checked by	DN
Scale	1:60
Unit	mm

DWG. Title

GREEN CORE DETAIL 1

DWG. No. AR-401

PAGE 72

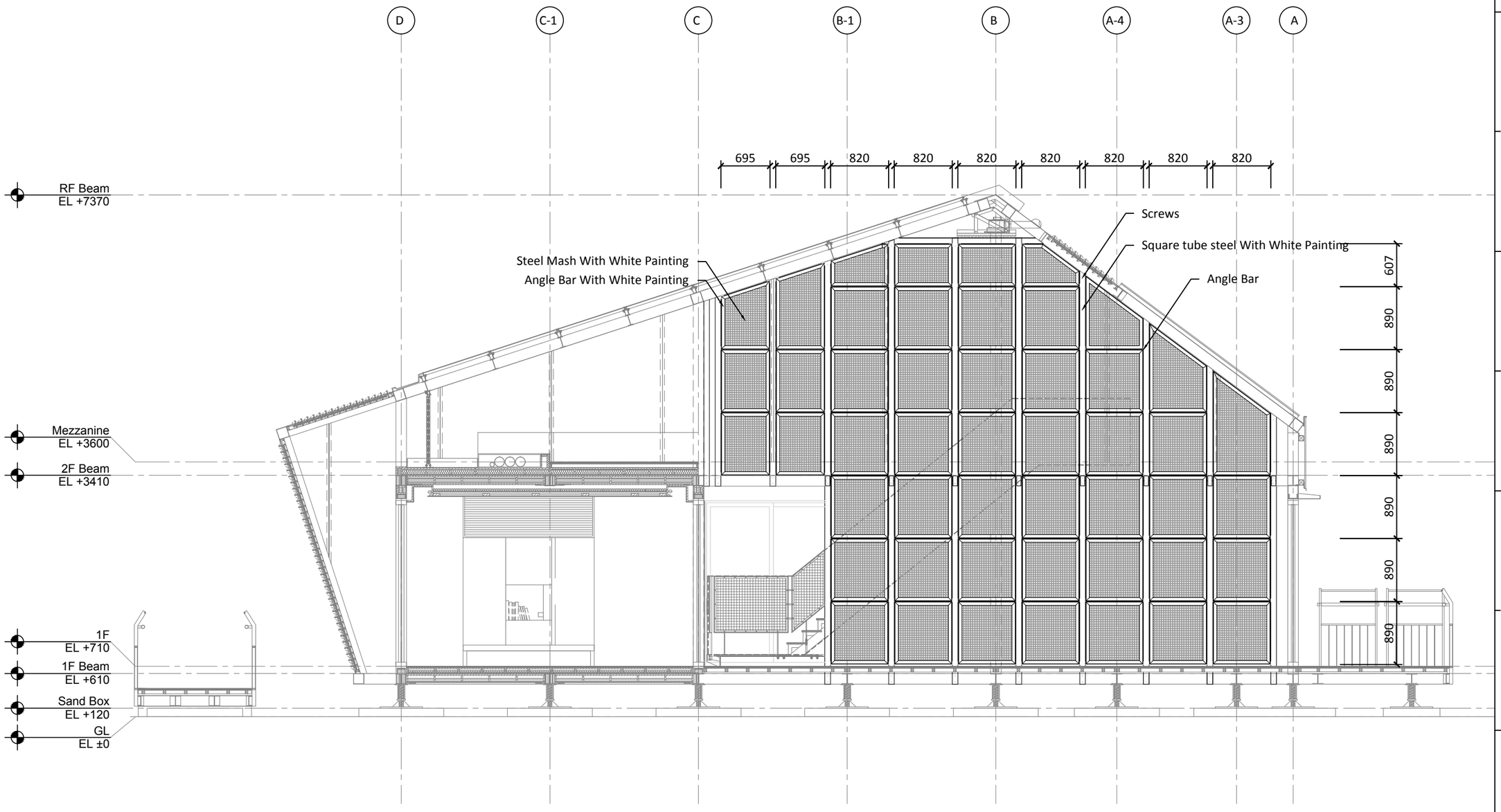

Solar Decathlon Europe

Project:

ORCHID HOUSE

Institution:

國立交通大學 National Chiao Tung University

NCTU Architecture 國立交通大學建築研究所

Team Name: NCTU/UNICODE

Address: 1001 Ta-Hsueh Road
Hsinchu City 30010
Taiwan

Contact: www.sde.tw

Consultants:

Note:

N

Mark	Date	Description
DN	2013/04/01	SD Submission
DN	2013/07/01	DDc Submission
ST	2013/11/01	DD Submission
ST	2014/03/03	CD Submission
ST	2014/04/30	CD Submission
ST	2014/06/02	CD Submission

Drawn by	CF
Checked by	DN
Scale	1:60
Unit	mm

DWG. Title

GREEN CORE DETAIL 2

DWG. No. AR-402

PAGE 73

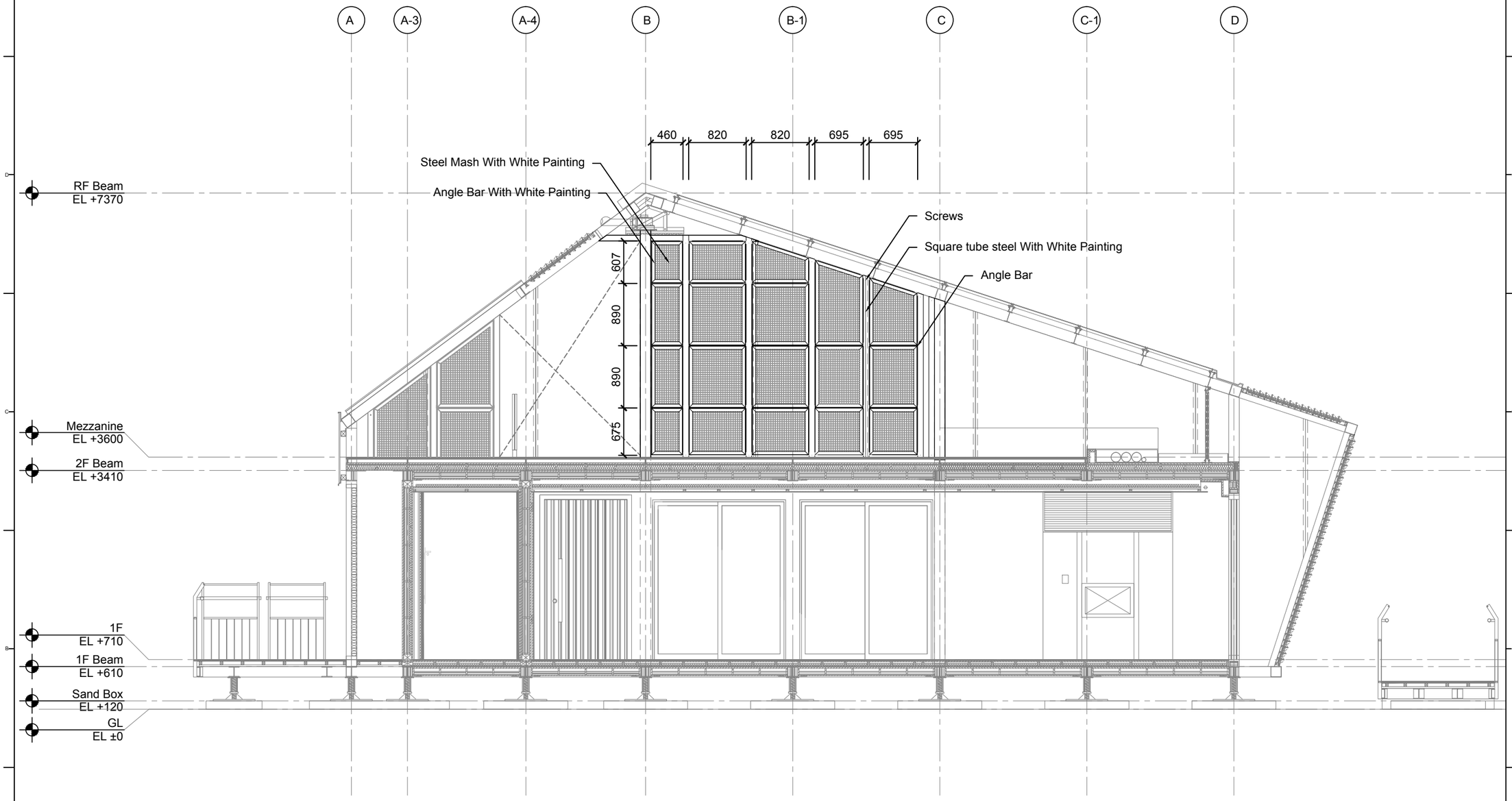

0 1 2 5 METER

Solar Decathlon Europe

Project:

ORCHID HOUSE

Institution:

國立交通大學 National Chiao Tung University

NCTU Architecture 國立交通大學建築研究所

Team Name:	NCTU/UNICODE
Address:	1001 Ta-Hsueh Road Hsinchu City 30010 Taiwan
Contact:	www.sde.tw

Consultants:

Note:

Mark	Date	Description
DN	2013/04/01	SD Submission
DN	2013/07/01	DDc Submission
ST	2013/11/01	DD Submission
ST	2014/03/03	CD Submission
ST	2014/04/30	CD Submission
ST	2014/06/02	CD Submission

Drawn by	CF
Checked by	DN
Scale	1:60
Unit	mm

DWG. Title

GREEN CORE DETAIL 3

DWG. No. AR-403

PAGE 74

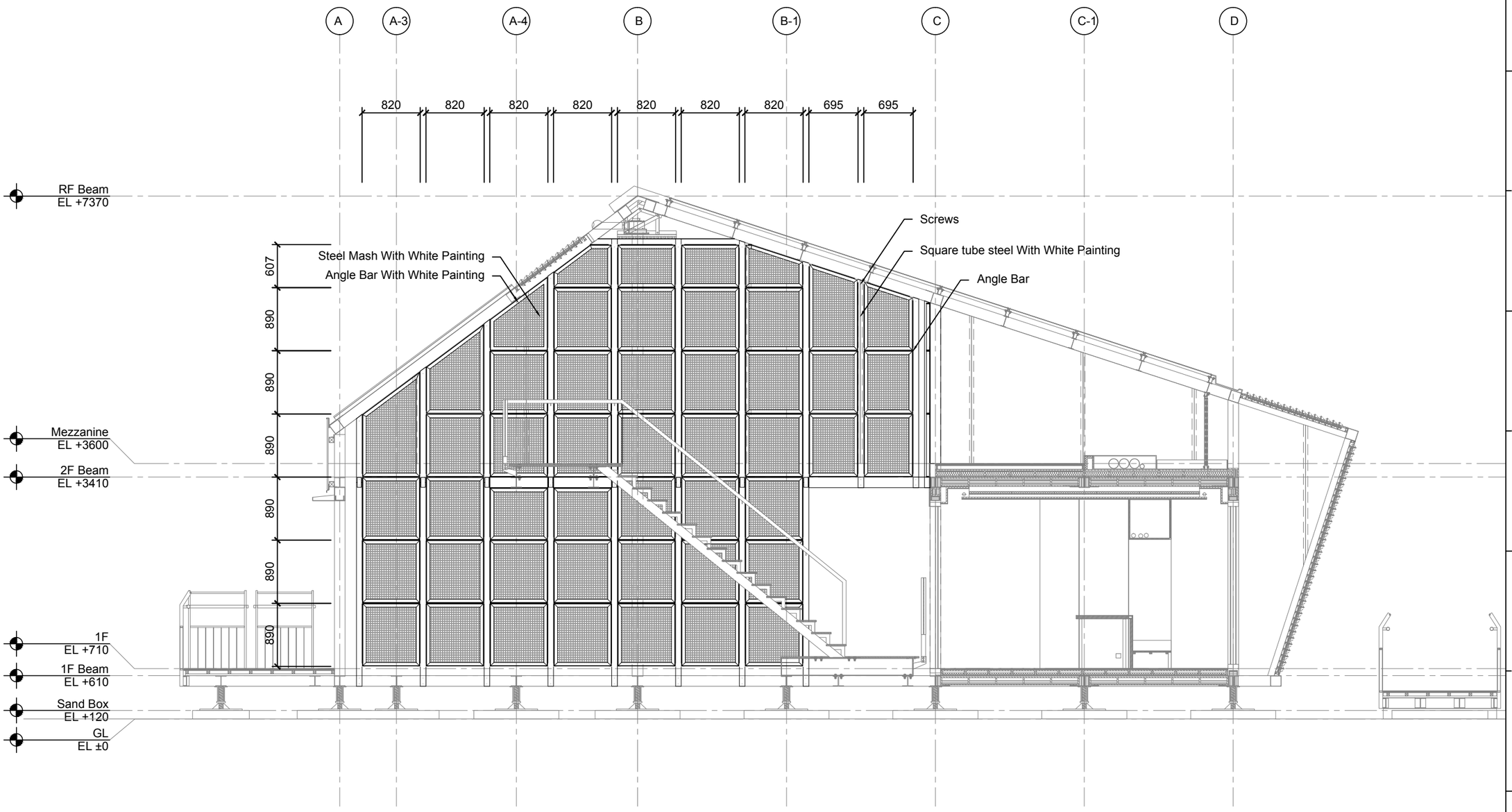

0 1 2 5 METER

Solar Decathlon Europe

Project: ORCHID HOUSE

Institution: 國立交通大學 National Chiao Tung University

NCTU Architecture 國立交通大學建築研究所

Team Name: NCTU/UNICODE

Address: 1001 Ta-Hsueh Road
Hsinchu City 30010
Taiwan

Contact: www.sde.tw

Consultants:

Note:

Mark	Date	Description
DN	2013/04/01	SD Submission
DN	2013/07/01	DDc Submission
ST	2013/11/01	DD Submission
ST	2014/03/03	CD Submission
ST	2014/04/30	CD Submission
ST	2014/06/02	CD Submission

Drawn by	CF
Checked by	DN
Scale	1:60
Unit	mm

DWG. Title

GREEN CORE DETAIL 4

DWG. No. AR-404

PAGE 75

1

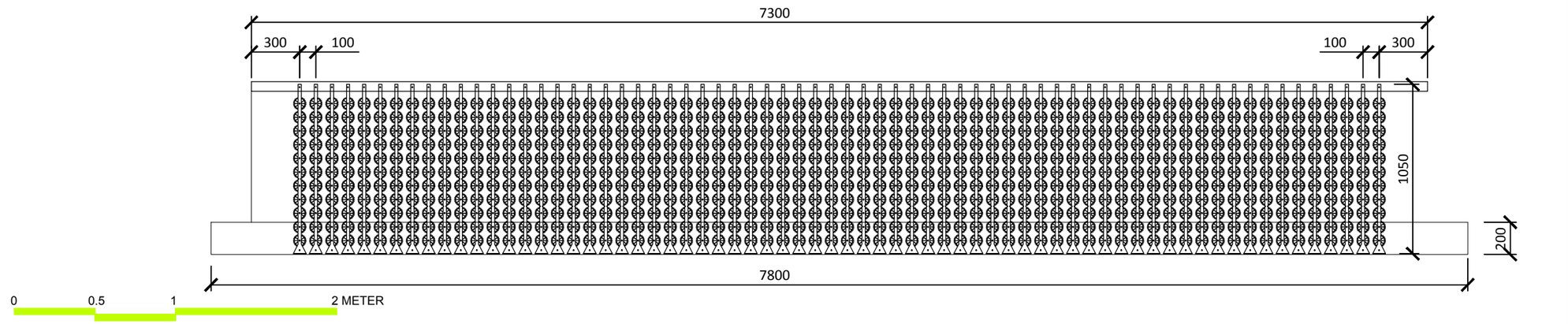

2

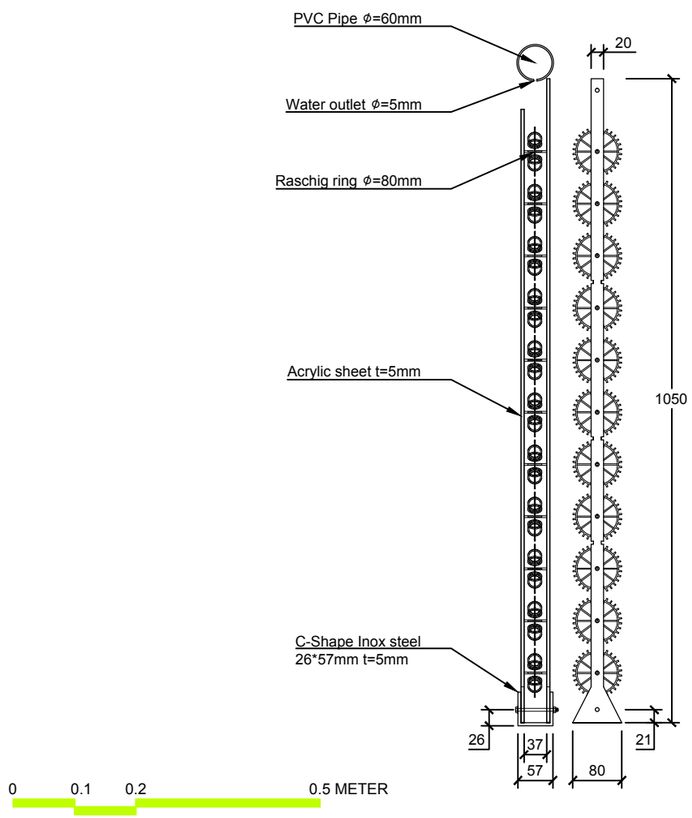

3

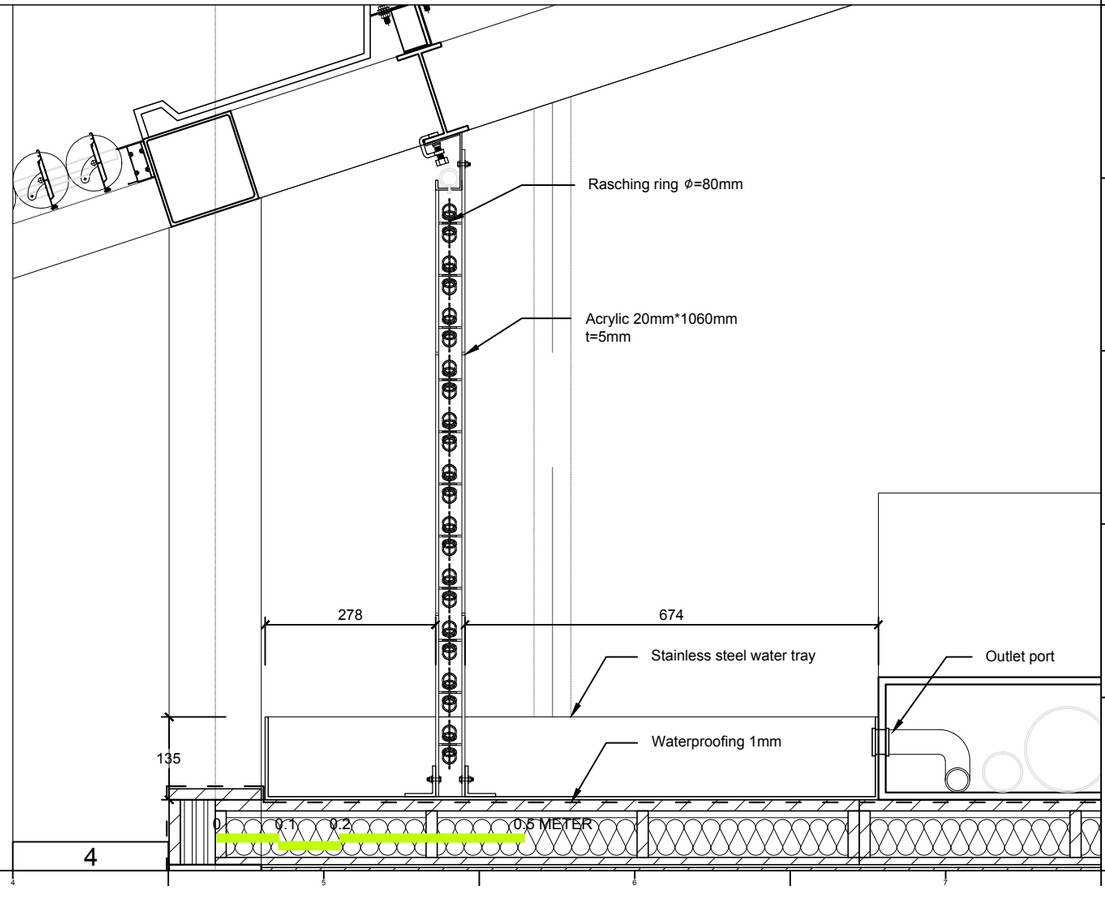

4

Solar Decathlon Europe

Project: ORCHID HOUSE

Institution: 國立交通大學 National Chiao Tung University

NCTU Architecture 國立交通大學建築研究所

Team Name:	NCTU/UNICODE
Address:	1001 Ta-Hsueh Road Hsinchu City 30010 Taiwan
Contact:	www.sde.tw

Consultants:

Note:

Mark	Date	Description
DN	2013/04/01	SD Submission
DN	2013/07/01	DDc Submission
ST	2013/11/01	DD Submission
ST	2014/03/03	CD Submission
ST	2014/04/30	CD Submission
ST	2014/06/02	CD Submission

Drawn by	CF
Checked by	DN
Scale	1:30
Unit	N/A

DWG. Title: WATER WALL DETAILS

DWG. No.: AR-411

PAGE: 76

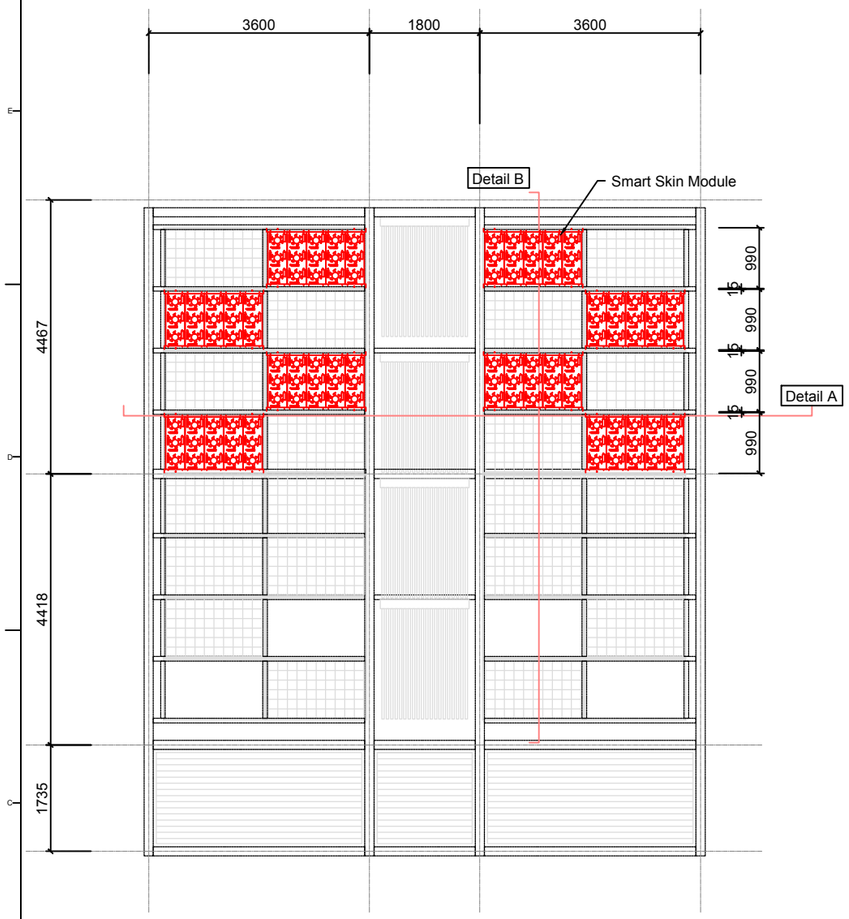

1

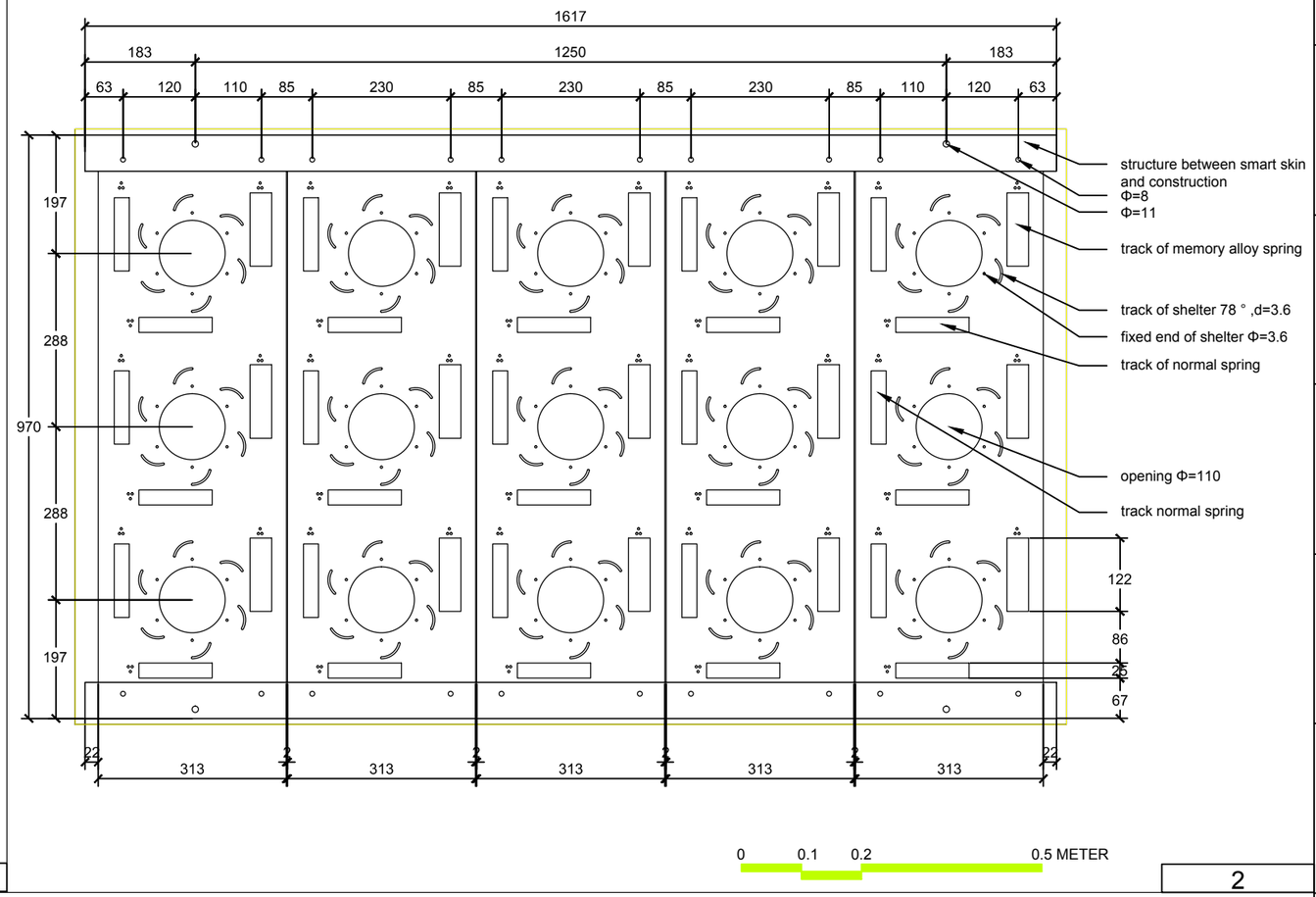

2

Detail A

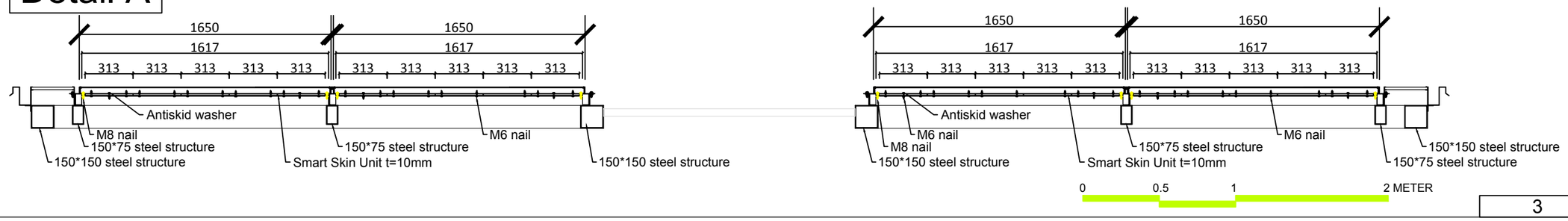

3

Detail B

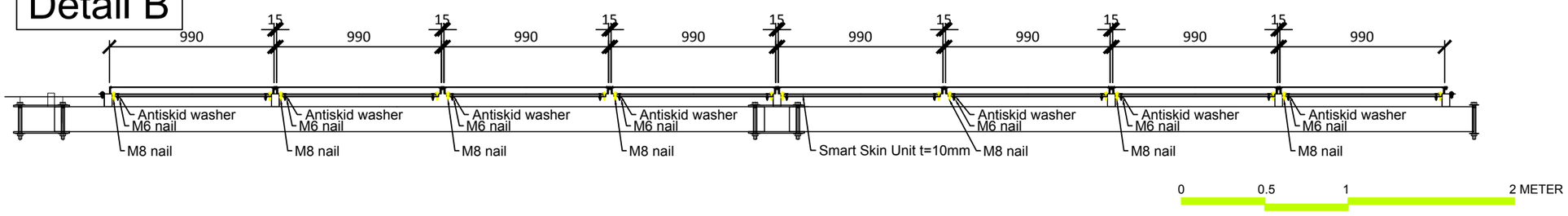

4

Solar Decathlon Europe

Project: ORCHID HOUSE

Institution: 國立交通大學 National Chiao Tung University

NCTU Architecture 國立交通大學建築研究所

Team Name: NCTU/UNICODE

Address: 1001 Ta-Hsueh Road Hsinchu City 30010 Taiwan

Contact: www.sde.tw

Consultants:

Note:

Mark	Date	Description
DN	2013/04/01	SD Submission
DN	2013/07/01	DDc Submission
ST	2013/11/01	DD Submission
ST	2014/03/03	CD Submission
ST	2014/04/30	CD Submission
ST	2014/06/02	CD Submission

Drawn by	RT
Checked by	ST
Scale	1:10
Unit	mm

DWG. Title: SMART SKIN DETAIL

DWG. No.: AR-421

PAGE: 77

01- M2 Screw

02- Translucent PVC, Shelter

03- Memory Alloy Spring

04- Normal Spring

05- 10mm Acrylic, Base

06- 2mm Acrylic, Wheel

07- Antiskid Washer

08- Screw Cap

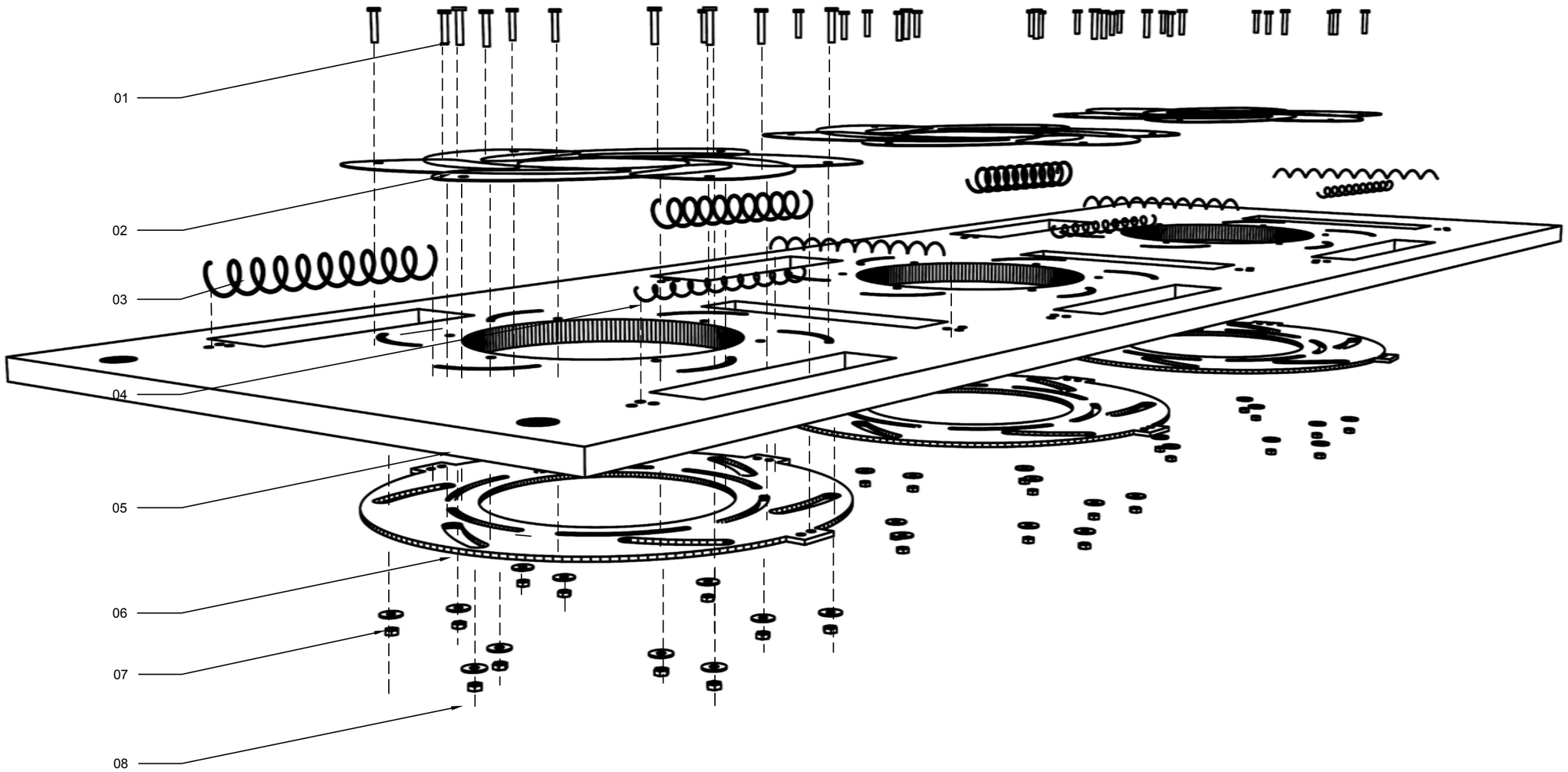

Solar Decathlon Europe

Project: ORCHID HOUSE

Institution: 國立交通大學 National Chiao Tung University

NCTU Architecture 國立交通大學建築研究所

Team Name: NCTU/UNICODE

Address: 1001 Ta-Hsueh Road
Hsinchu City 30010
Taiwan

Contact: www.sde.tw

Consultants:

Note:

Mark	Date	Description
DN	2013/04/01	SD Submission
DN	2013/07/01	DDc Submission
ST	2013/11/01	DD Submission
ST	2014/03/03	CD Submission
ST	2014/04/30	CD Submission
ST	2014/06/02	CD Submission

Drawn by	RT
Checked by	ST
Scale	1:10
Unit	mm

DWG. Title

SMART SKIN DETAIL

DWG. No. AR-422

PAGE 78

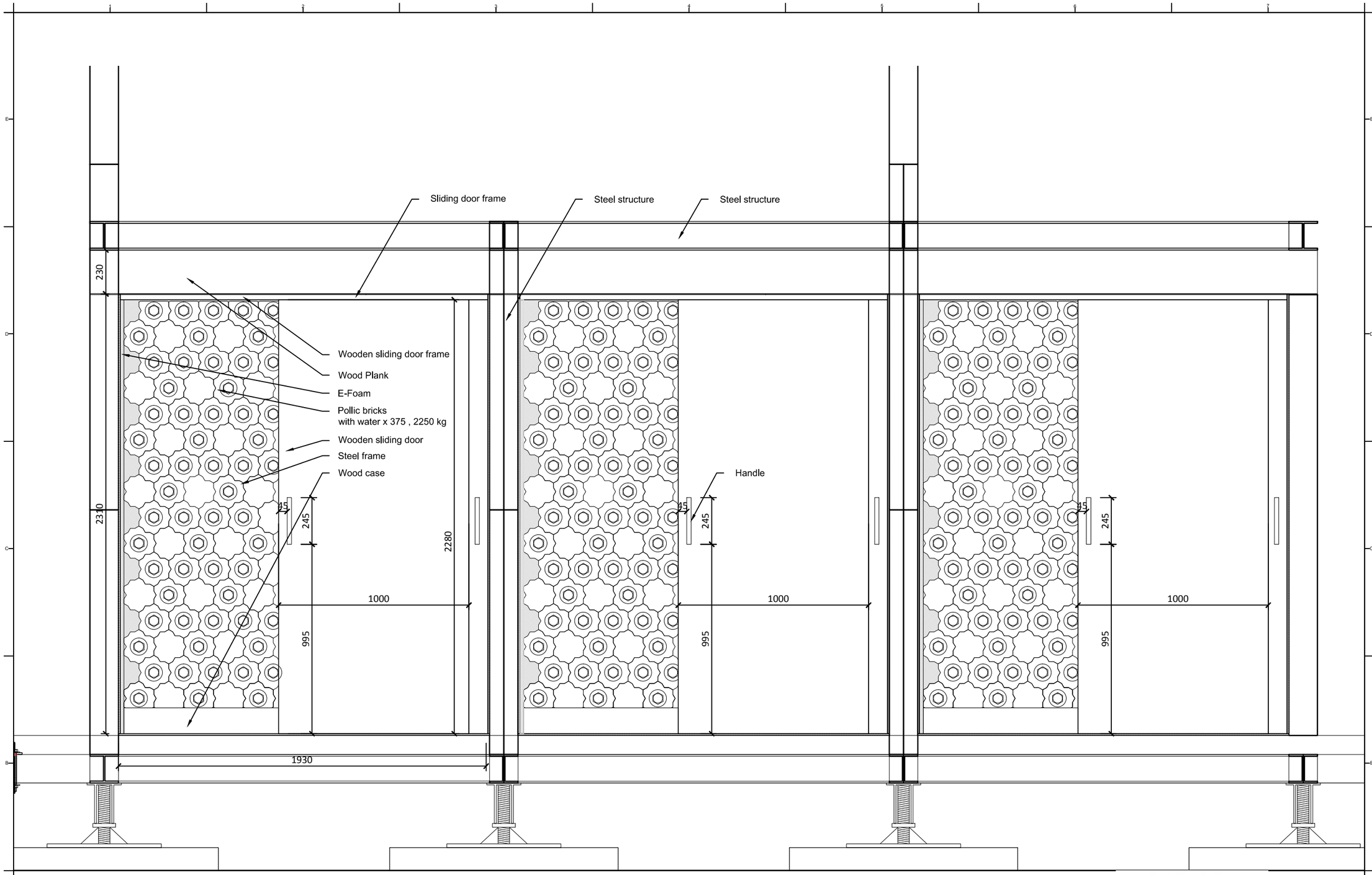

1:20 0 0.2 0.4 1 METER

1

Solar Decathlon Europe

Project: ORCHID HOUSE

Institution: 國立交通大學 National Chiao Tung University

NCTU Architecture 國立交通大學建築研究所

Team Name: NCTU/UNICODE

Address: 1001 Ta-Hsueh Road Hsinchu City 30010 Taiwan

Contact: www.sde.tw

Consultants:

Note:

Mark	Date	Description
DN	2013/04/01	SD Submission
DN	2013/07/01	DDc Submission
ST	2013/11/01	DD Submission
ST	2014/03/03	CD Submission
ST	2014/04/30	CD Submission
ST	2014/06/02	CD Submission

Drawn by	JL
Checked by	DN
Scale	1: 20
Unit	mm

DWG. Title

THERMAL WALL DETAILS 1

DWG. No. AR-431

PAGE 79

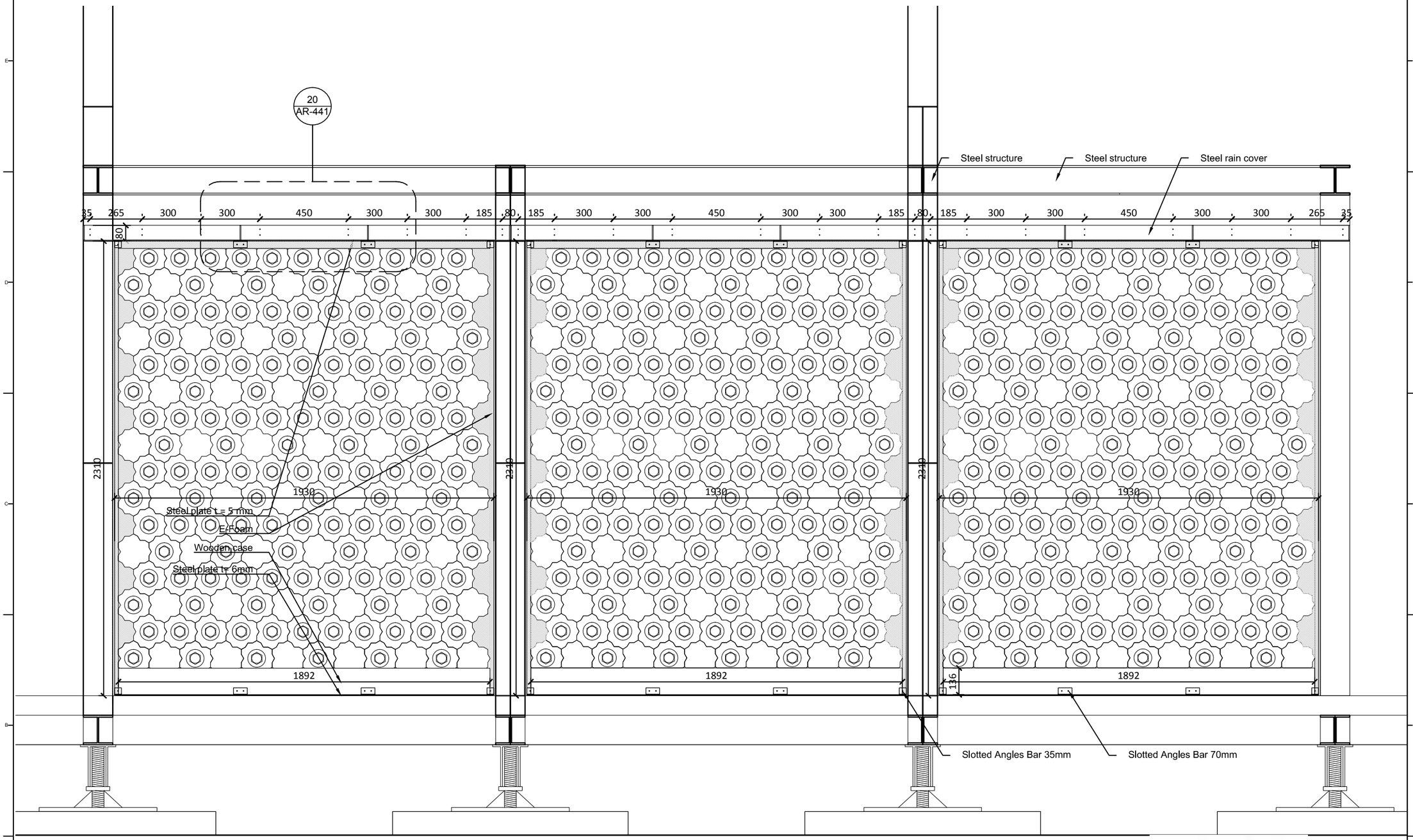

1:20 0 0.2 0.4 1 METER

2

Solar Decathlon Europe

Project: ORCHID HOUSE

Institution: 國立交通大學 National Chiao Tung University

NCTU Architecture 國立交通大學建築研究所

Team Name: NCTU/UNICODE

Address: 1001 Ta-Hsueh Road Hsinchu City 30010 Taiwan

Contact: www.sde.tw

Consultants:

Note:

Mark	Date	Description
DN	2013/04/01	SD Submission
DN	2013/07/01	DDc Submission
ST	2013/11/01	DD Submission
ST	2014/03/03	CD Submission
ST	2014/04/30	CD Submission
ST	2014/06/02	CD Submission

Drawn by	JL
Checked by	DN
Scale	1:20
Unit	mm

DWG. Title: THERMAL WALL DETAILS 2

DWG. No. AR-432

PAGE 80

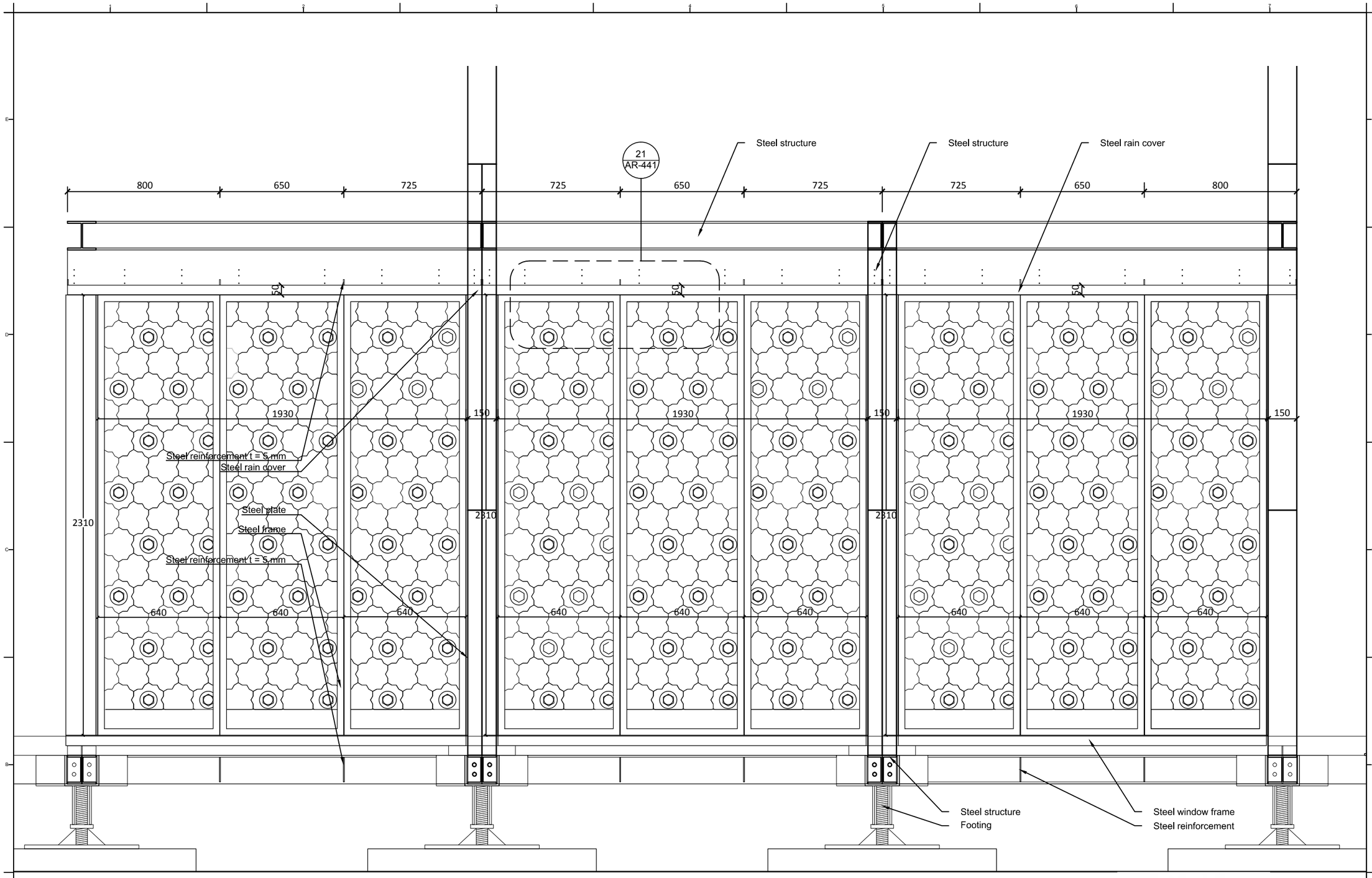

1:20 0 0.2 0.4 1 METER

3

Solar Decathlon Europe

Project: ORCHID HOUSE

Institution: 國立交通大學 National Chiao Tung University

NCTU Architecture 國立交通大學建築研究所

Team Name: NCTU/UNICODE

Address: 1001 Ta-Hsueh Road Hsinchu City 30010 Taiwan

Contact: www.sde.tw

Consultants:

Note:

Mark	Date	Description
DN	2013/04/01	SD Submission
DN	2013/07/01	DDc Submission
ST	2013/11/01	DD Submission
ST	2014/03/03	CD Submission
ST	2014/04/30	CD Submission
ST	2014/06/02	CD Submission

Drawn by	JL
Checked by	DN
Scale	1: 20
Unit	mm

DWG. Title: THERMAL WALL DETAILS 3

DWG. No. AR-433

PAGE 81

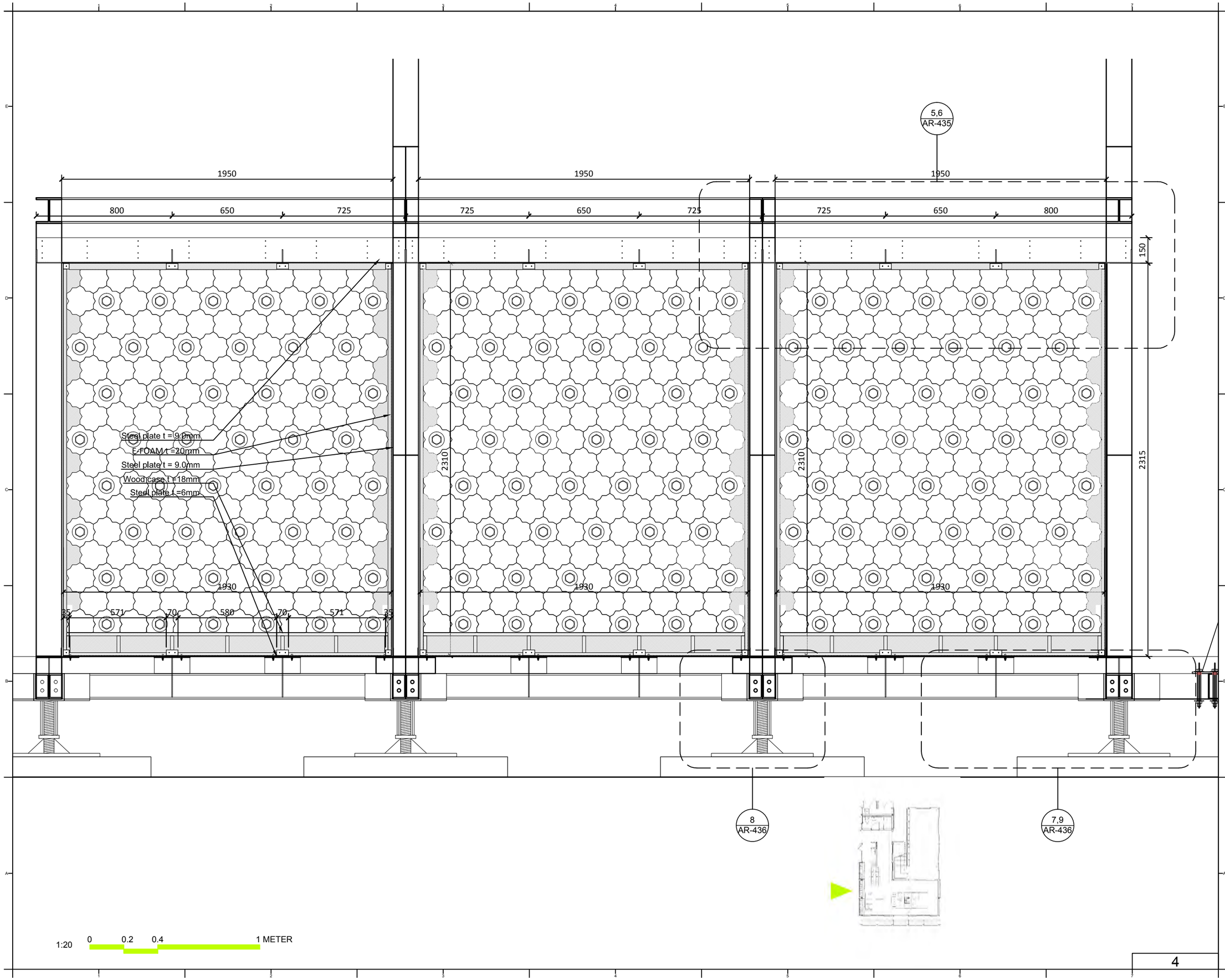

Solar Decathlon Europe

Project: ORCHID HOUSE

Institution: 國立交通大學 National Chiao Tung University

NCTU Architecture 國立交通大學建築研究所

Team Name: NCTU/UNICODE

Address: 1001 Ta-Hsueh Road
Hsinchu City 30010
Taiwan

Contact: www.sde.tw

Consultants:

Note:

Mark	Date	Description
DN	2013/04/01	SD Submission
DN	2013/07/01	DDc Submission
ST	2013/11/01	DD Submission
ST	2014/03/03	CD Submission
ST	2014/04/30	CD Submission
ST	2014/06/02	CD Submission

Drawn by	JL
Checked by	DN
Scale	1:20
Unit	mm

DWG. Title
THERMAL WALL DETAILS 4

DWG. No. AR-434

PAGE 82

4

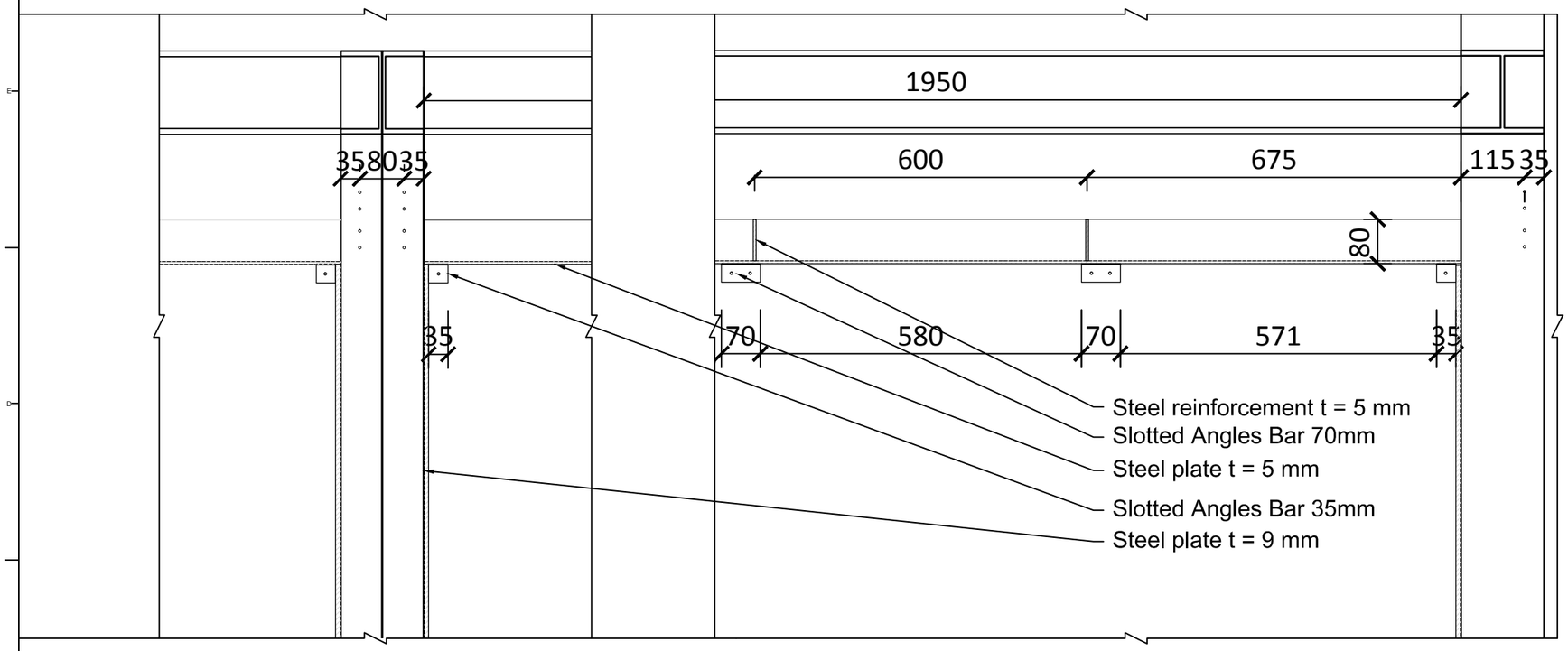

1:10 0 0.1 0.2 0.5 METER

5

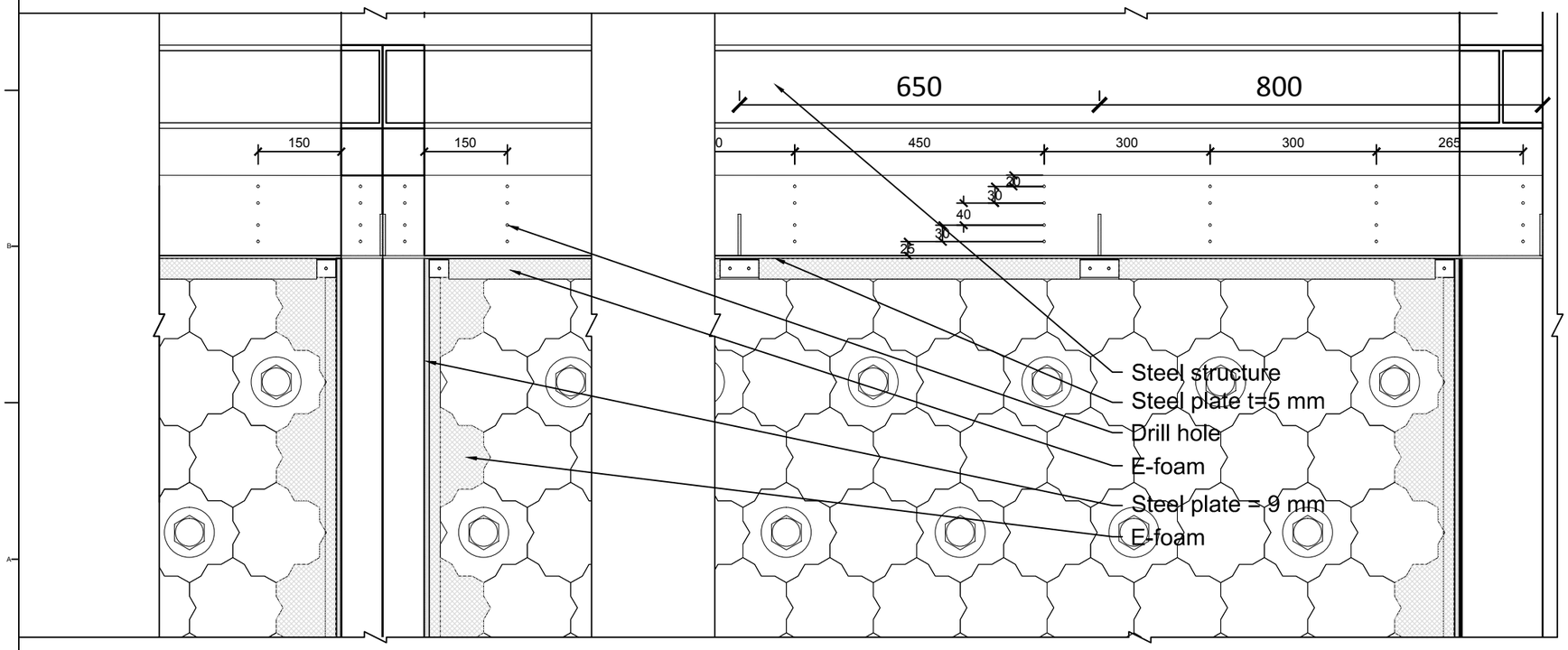

1:10 0 0.1 0.2 0.5 METER

6

Solar Decathlon Europe

Project: ORCHID HOUSE

Institution: 國立交通大學 National Chiao Tung University

NCTU Architecture 國立交通大學建築研究所

Team Name: NCTU/UNICODE
Address: 1001 Ta-Hsueh Road Hsinchu City 30010 Taiwan
Contact: www.sde.tw

Consultants:

Note:

Mark	Date	Description
DN	2013/04/01	SD Submission
DN	2013/07/01	DDc Submission
ST	2013/11/01	DD Submission
ST	2014/03/03	CD Submission
ST	2014/04/30	CD Submission
ST	2014/06/02	CD Submission

Drawn by	JL
Checked by	DN
Scale	1: 10
Unit	mm

DWG. Title: THERMAL WALL DETAILS 5

DWG. No. AR-435

PAGE 83

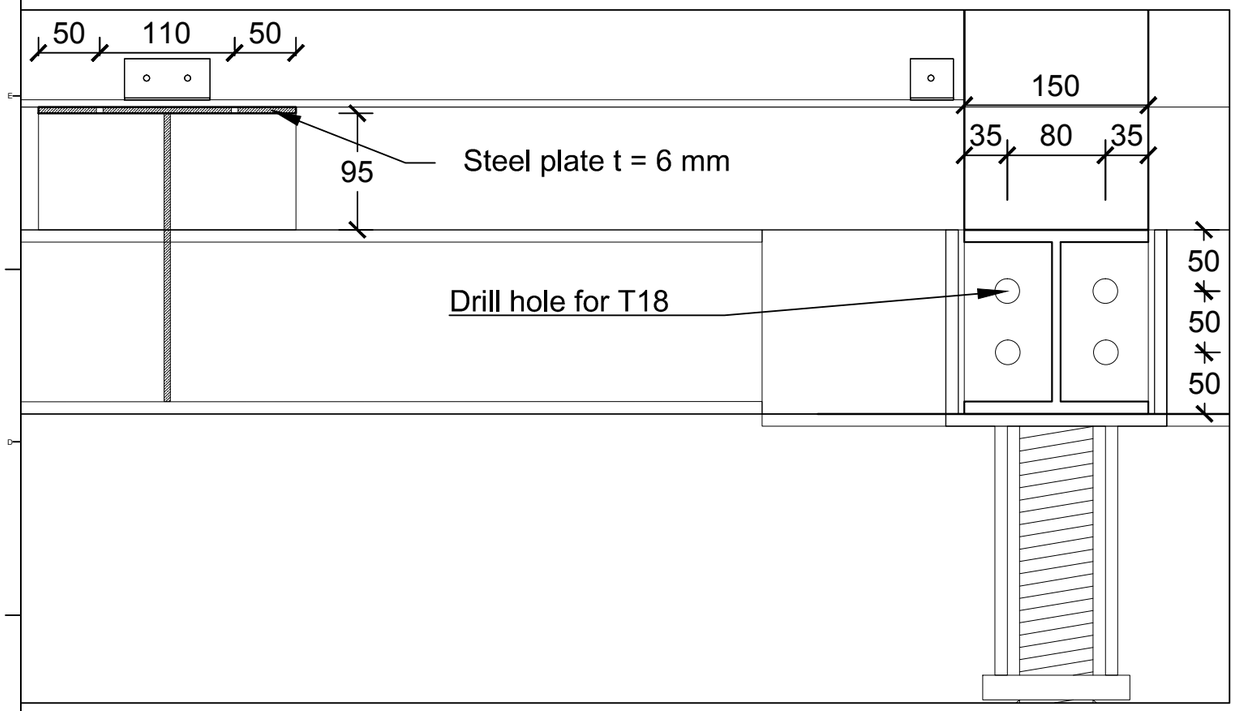

1:5 0 0.05 0.1 0.2 METER

7

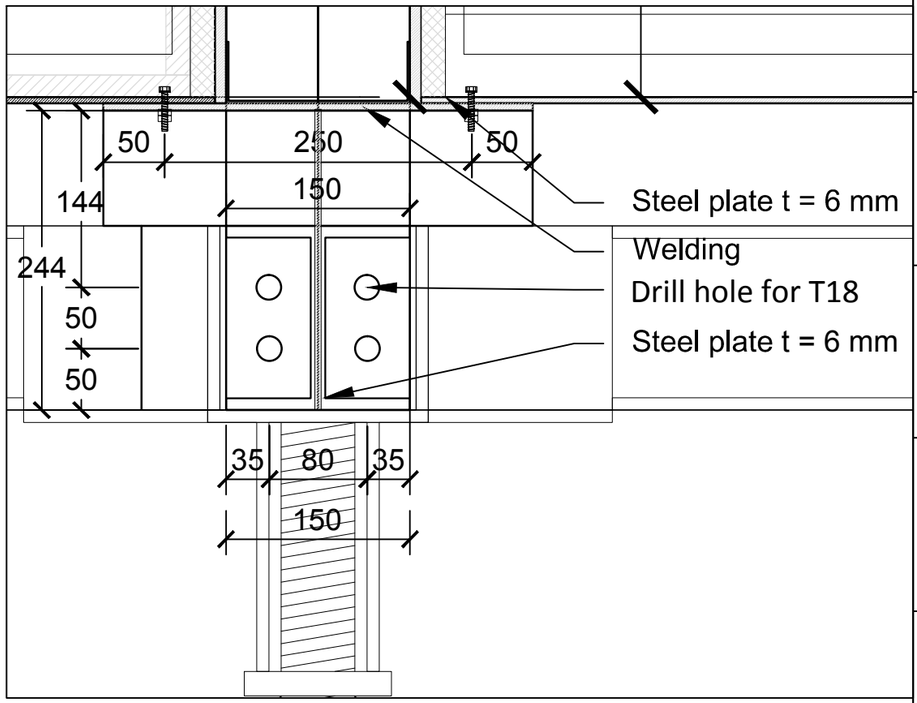

1:5 0 0.05 0.1 0.2 METER

8

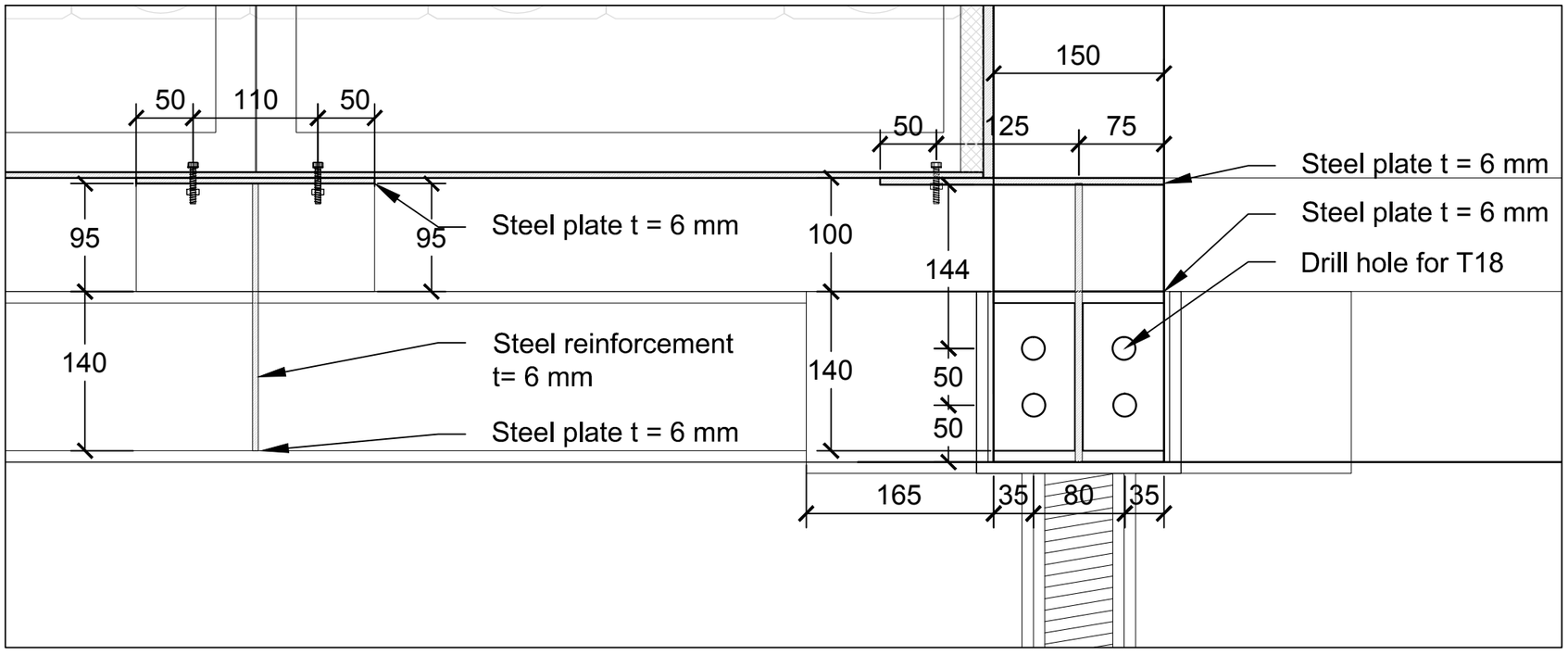

1:5 0 0.05 0.1 0.2 METER

9

Solar Decathlon Europe

Project: ORCHID HOUSE

Institution: 國立交通大學 National Chiao Tung University

NCTU Architecture 國立交通大學建築研究所

Team Name: NCTU/UNICODE

Address: 1001 Ta-Hsueh Road
Hsinchu City 30010
Taiwan

Contact: www.sde.tw

Consultants:

Note:

Mark	Date	Description
DN	2013/04/01	SD Submission
DN	2013/07/01	DDc Submission
ST	2013/11/01	DD Submission
ST	2014/03/03	CD Submission
ST	2014/04/30	CD Submission
ST	2014/06/02	CD Submission

Drawn by	JL
Checked by	DN
Scale	1:5
Unit	mm

DWG. Title: THERMAL WALL DETAILS 6

DWG. No. AR-436

PAGE 84

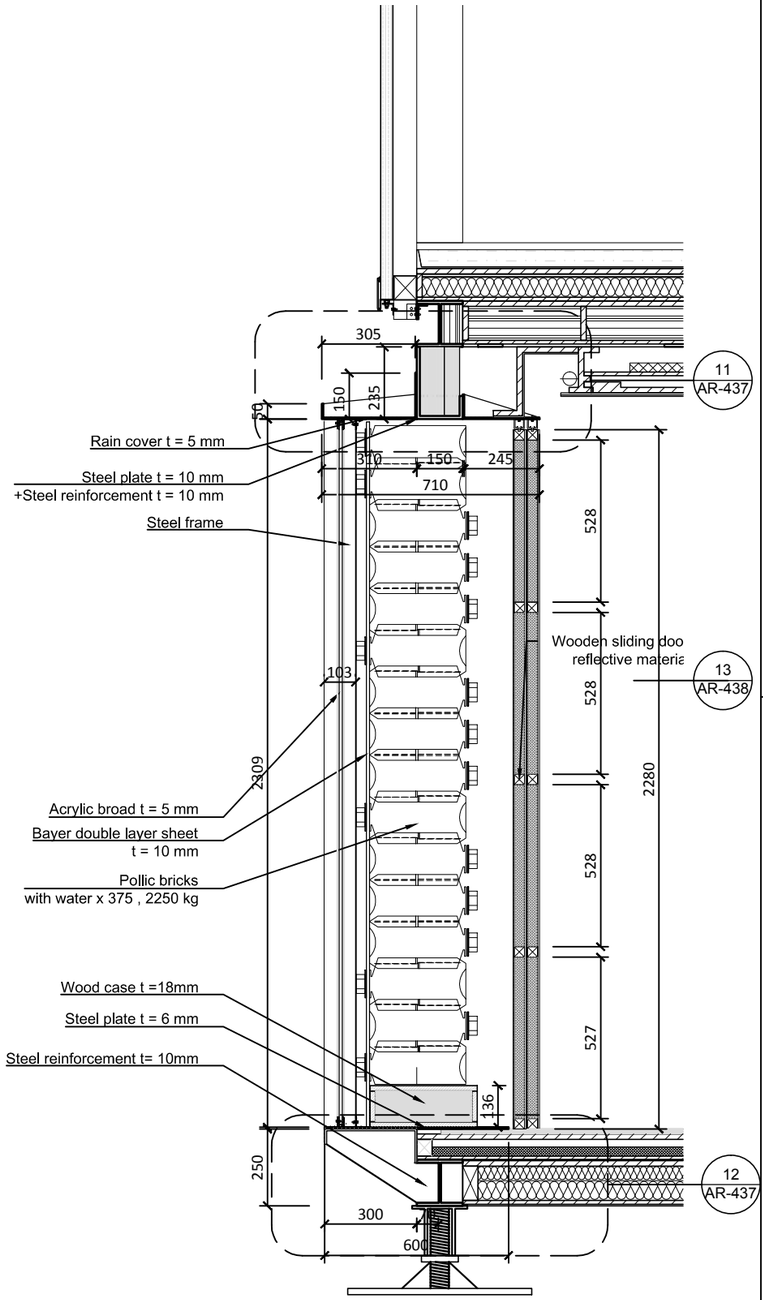

1:20 0 0.2 0.4 1 METER

10

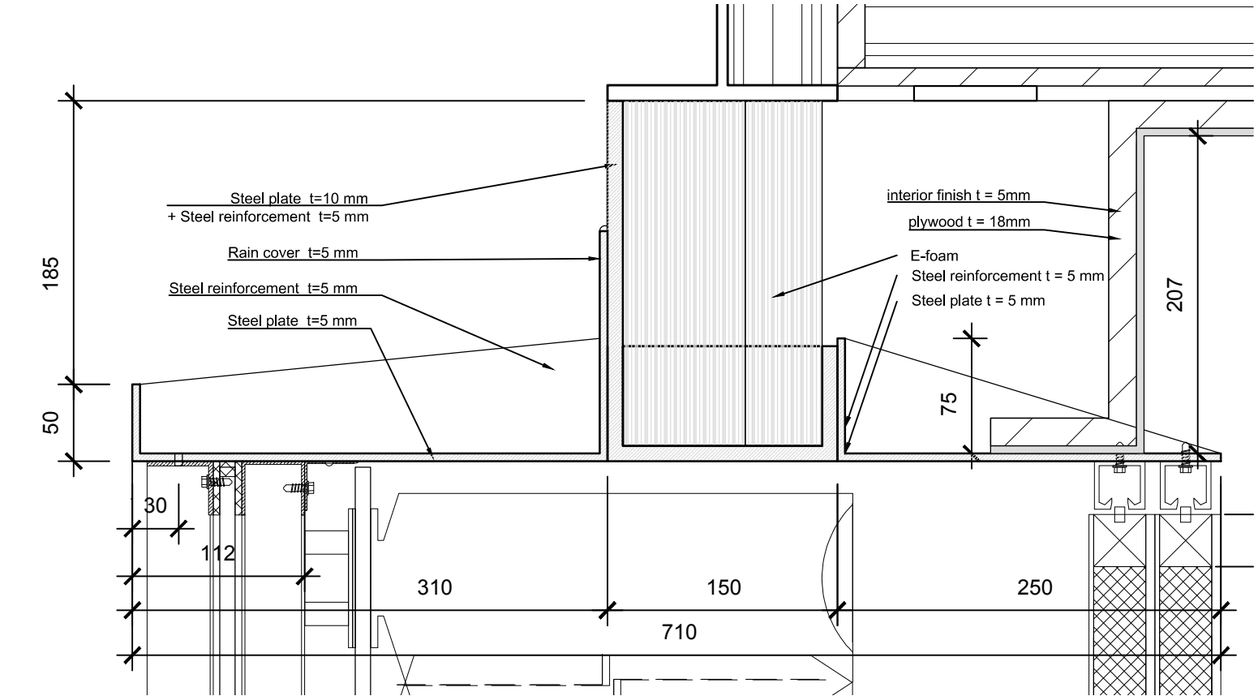

1:4 0 0.05 0.1 0.2 METER

11

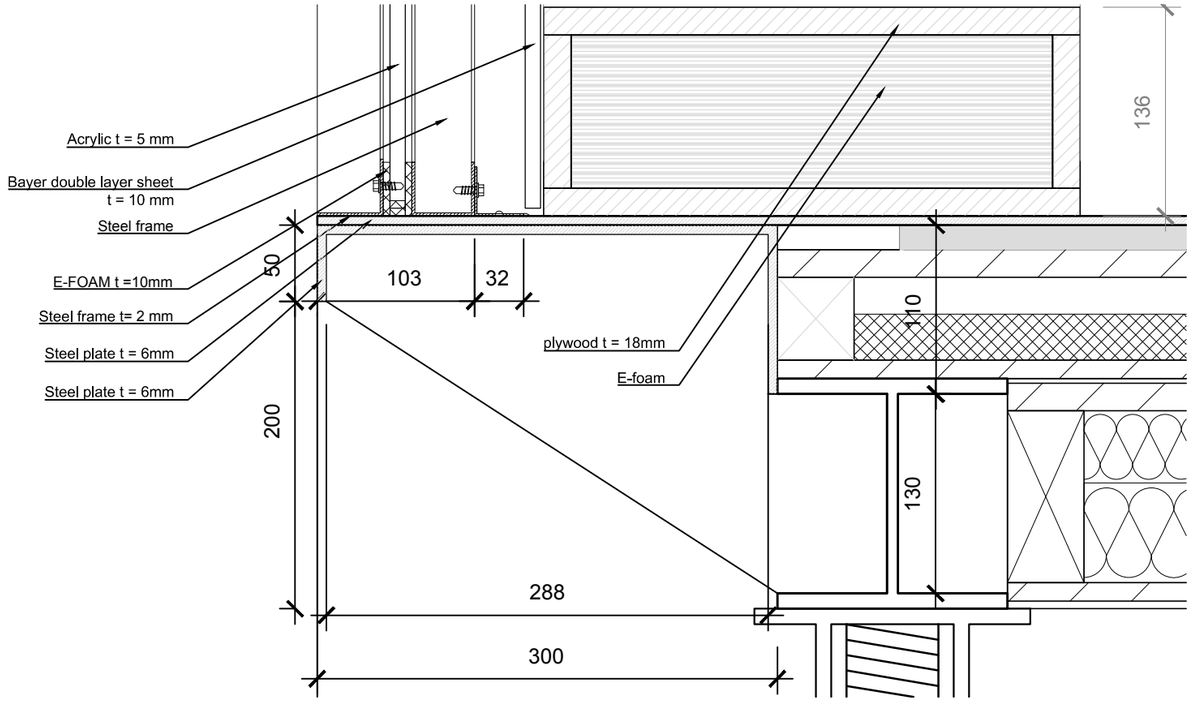

1:4 0 0.05 0.1 0.2 METER

12

Solar Decathlon Europe

Project: ORCHID HOUSE

Institution: 國立交通大學 National Chiao Tung University

NCTU Architecture 國立交通大學建築研究所

Team Name: NCTU/UNICODE

Address: 1001 Ta-Hsueh Road
Hsinchu City 30010
Taiwan

Contact: www.sde.tw

Consultants:

Note:

Mark	Date	Description
DN	2013/04/01	SD Submission
DN	2013/07/01	DDc Submission
ST	2013/11/01	DD Submission
ST	2014/03/03	CD Submission
ST	2014/04/30	CD Submission
ST	2014/06/02	CD Submission

Drawn by	JL
Checked by	DN
Scale	1:20 & 1:04
Unit	mm

DWG. Title: THERMAL WALL DETAILS 7

DWG. No. AR-437

PAGE 85

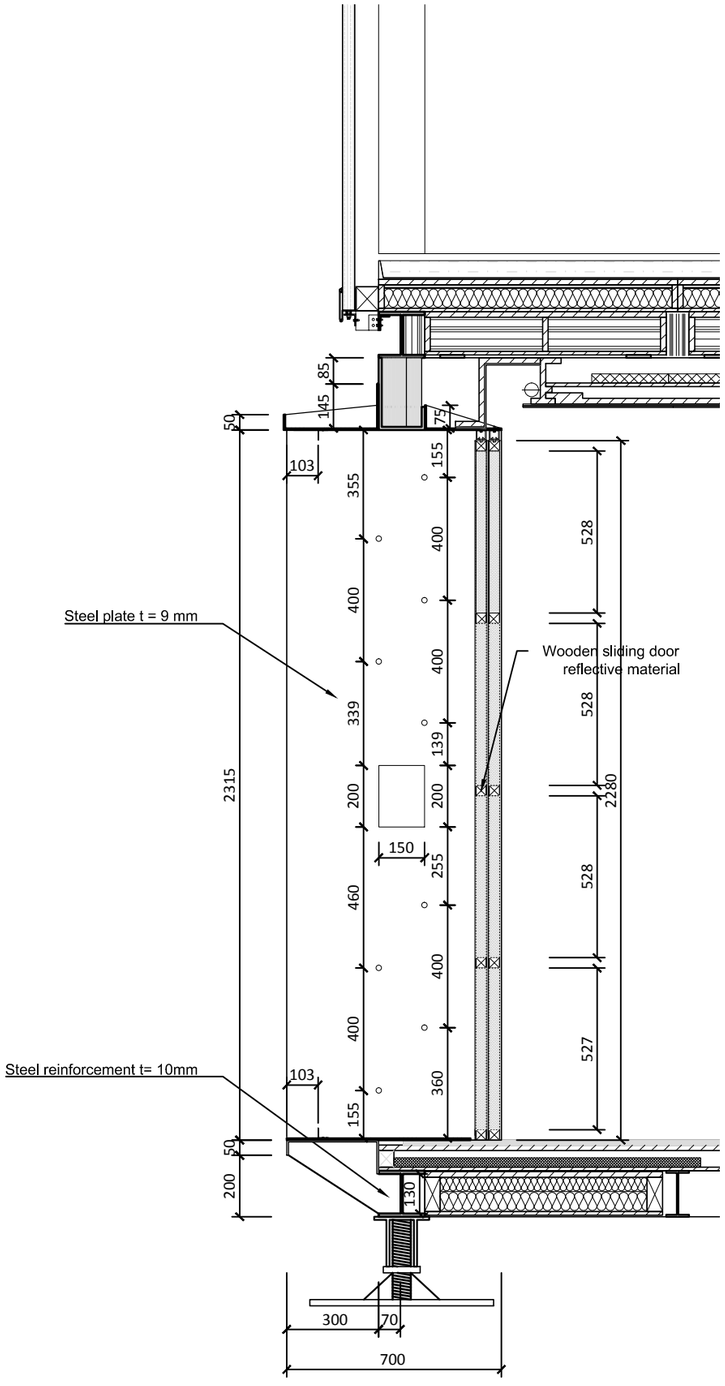

1:20 0 0.2 0.4 1 METER

13

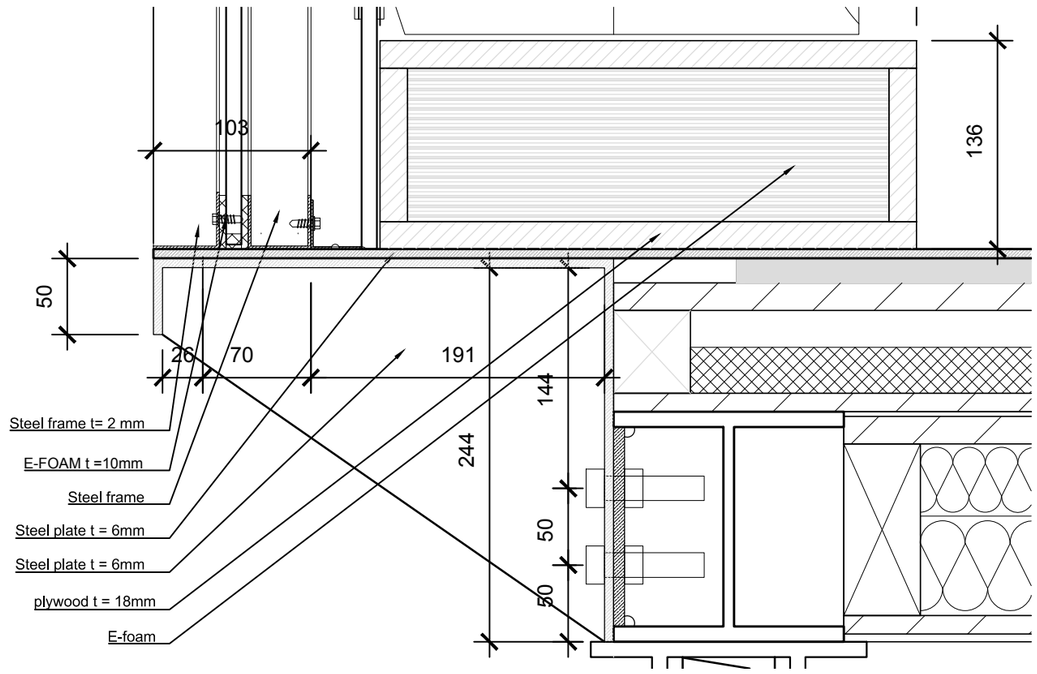

1:4 0 0.05 0.1 0.2 METER

14

Solar Decathlon Europe

Project: ORCHID HOUSE

Institution: 國立交通大學 National Chiao Tung University

NCTU Architecture 國立交通大學建築研究所

Team Name: NCTU/UNICODE

Address: 1001 Ta-Hsueh Road
Hsinchu City 30010
Taiwan

Contact: www.sde.tw

Consultants:

Note:

Mark	Date	Description
DN	2013/04/01	SD Submission
DN	2013/07/01	DDc Submission
ST	2013/11/01	DD Submission
ST	2014/03/03	CD Submission
ST	2014/04/30	CD Submission
ST	2014/06/02	CD Submission

Drawn by	JL
Checked by	DN
Scale	1:20 & 1:04
Unit	mm

DWG. Title: THERMAL WALL DETAILS 8

DWG. No. AR-438

PAGE 86

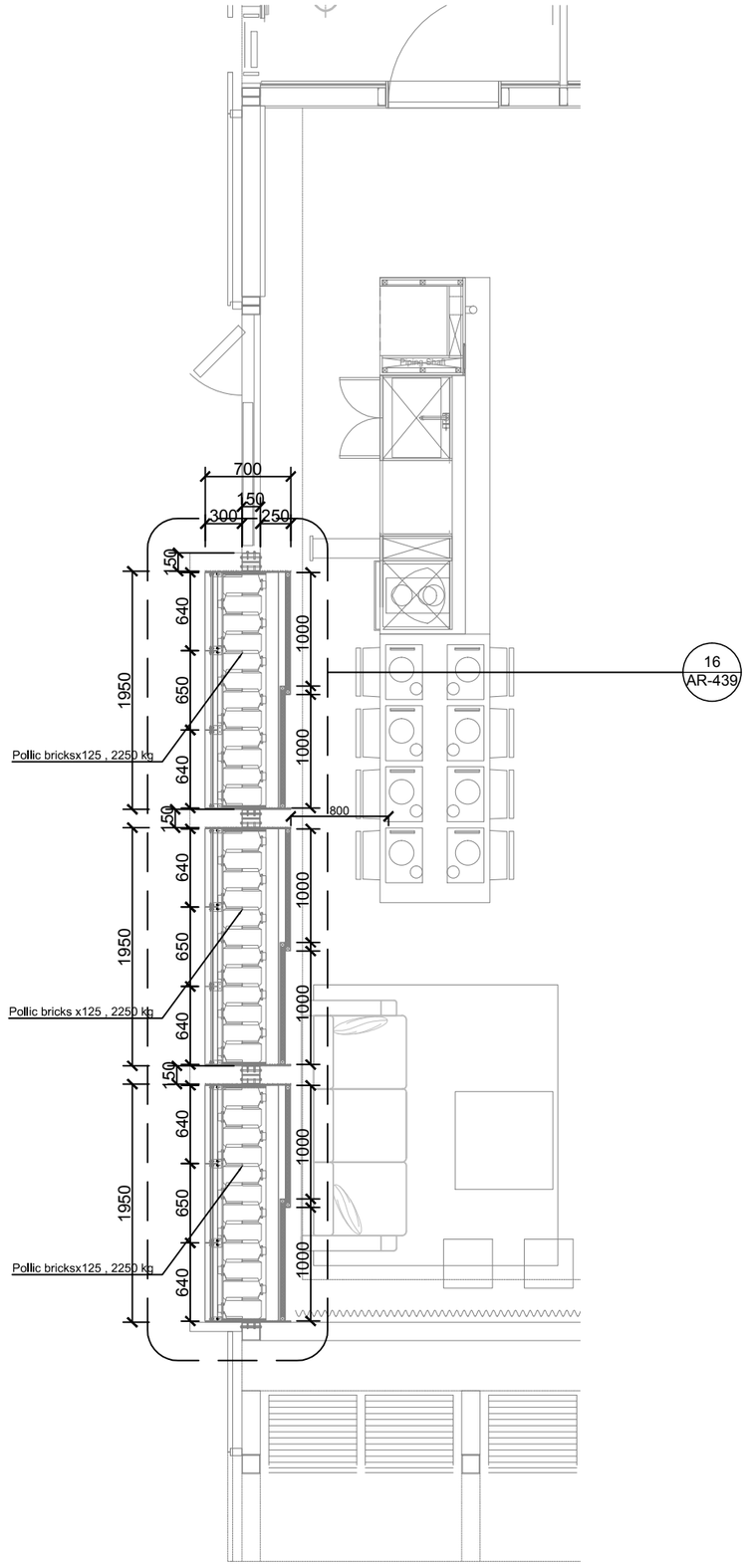

1:50 0 0.5 1 2 METER

15

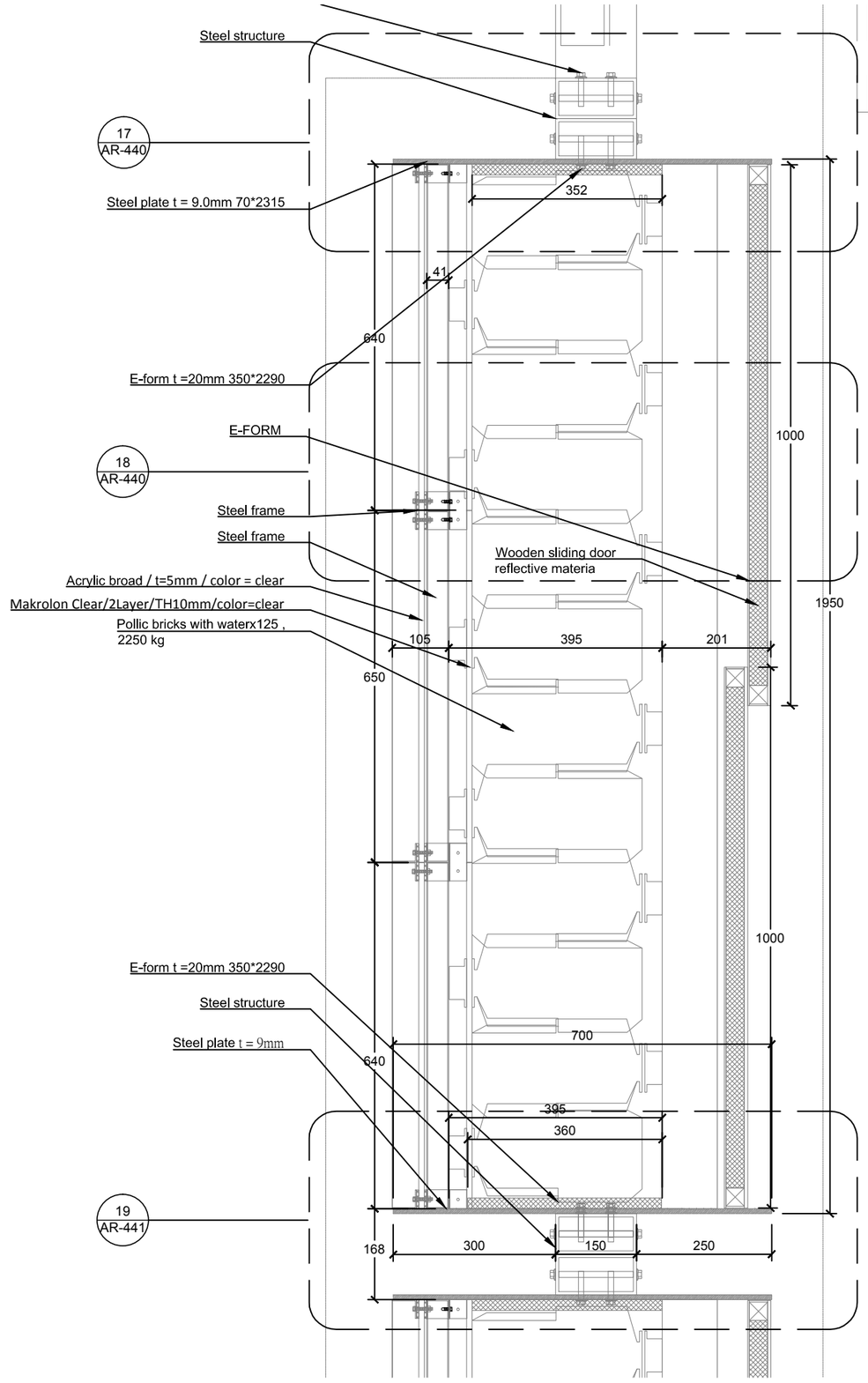

1:10 0 0.1 0.2 0.5 METER

16

Solar Decathlon Europe

Project: ORCHID HOUSE

Institution: 國立交通大學 National Chiao Tung University

NCTU Architecture 國立交通大學建築研究所

Team Name: NCTU/UNICODE

Address: 1001 Ta-Hsueh Road
Hsinchu City 30010
Taiwan

Contact: www.sde.tw

Consultants:

Note:

Mark	Date	Description
DN	2013/04/01	SD Submission
DN	2013/07/01	DDc Submission
ST	2013/11/01	DD Submission
ST	2014/03/03	CD Submission
ST	2014/04/30	CD Submission
ST	2014/06/02	CD Submission

Drawn by	JL
Checked by	DN
Scale	1:50 & 1:10
Unit	mm

DWG. Title

THERMAL WALL DETAILS 9

DWG. No. AR-439

PAGE 87

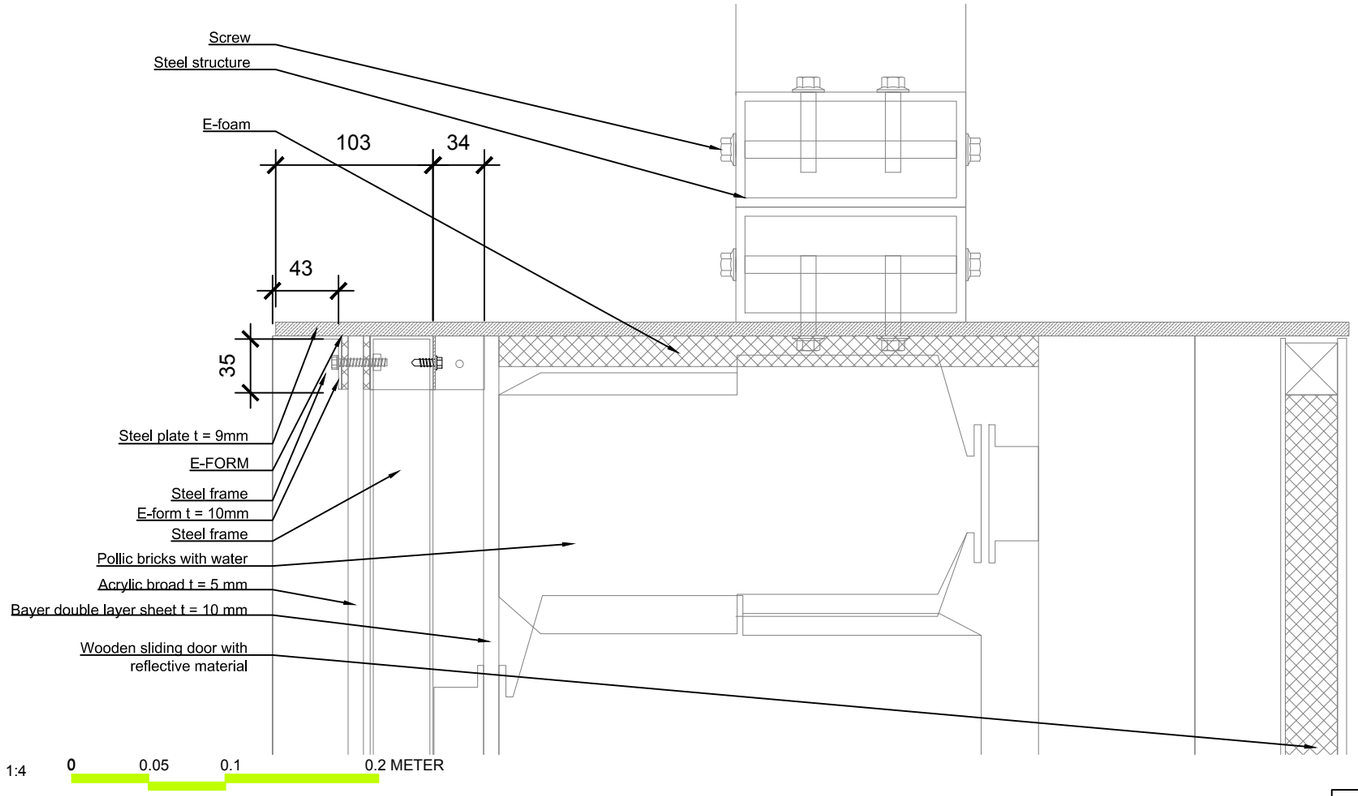

17

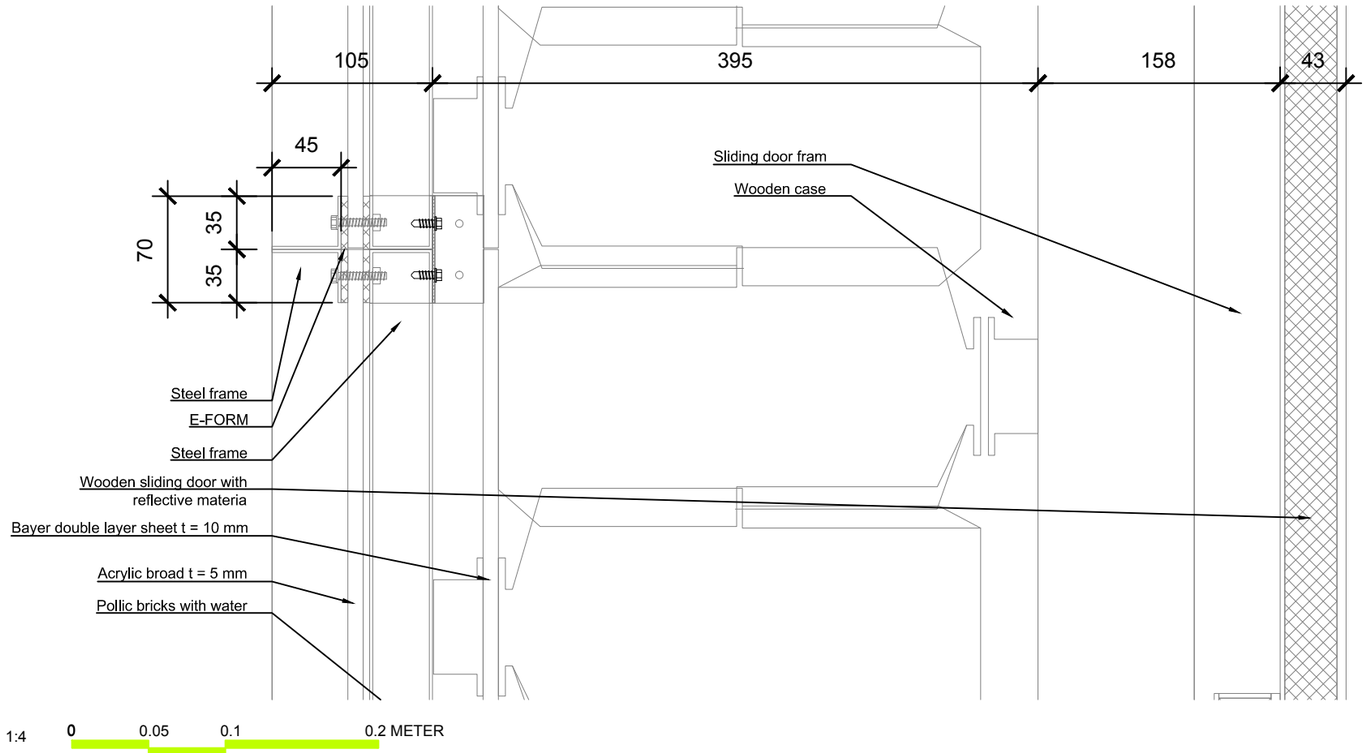

18

Solar Decathlon Europe

Project: ORCHID HOUSE

Institution: 國立交通大學 National Chiao Tung University

NCTU Architecture 國立交通大學建築研究所

Team Name: NCTU/UNICODE

Address: 1001 Ta-Hsueh Road
Hsinchu City 30010
Taiwan

Contact: www.sde.tw

Consultants:

Note:

Mark	Date	Description
DN	2013/04/01	SD Submission
DN	2013/07/01	DDc Submission
ST	2013/11/01	DD Submission
ST	2014/03/03	CD Submission
ST	2014/04/30	CD Submission
ST	2014/06/02	CD Submission

Drawn by	JL
Checked by	DN
Scale	1: 04
Unit	mm

DWG. Title: THERMAL WALL DETAILS 10

DWG. No. AR-440

PAGE 88

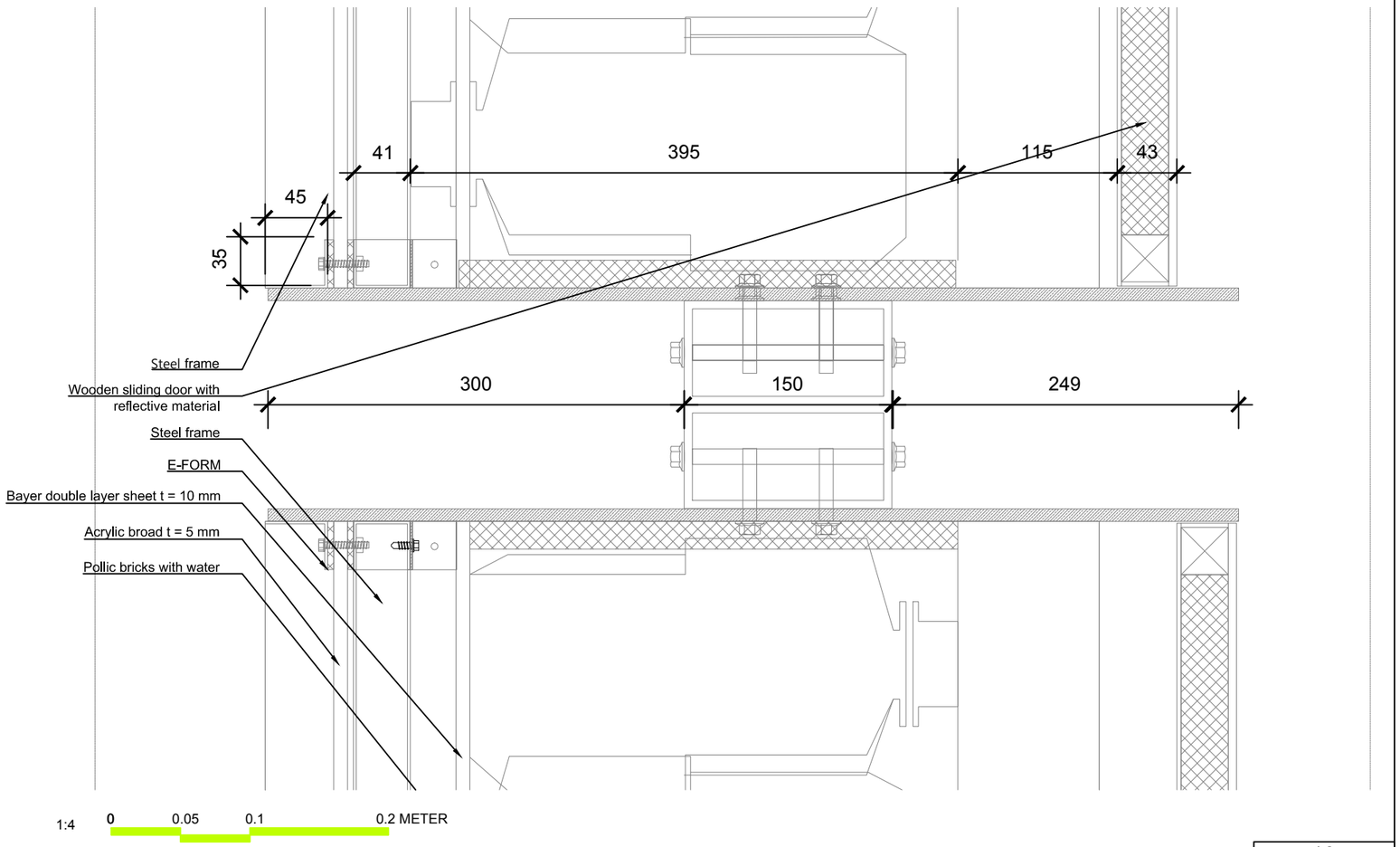

19

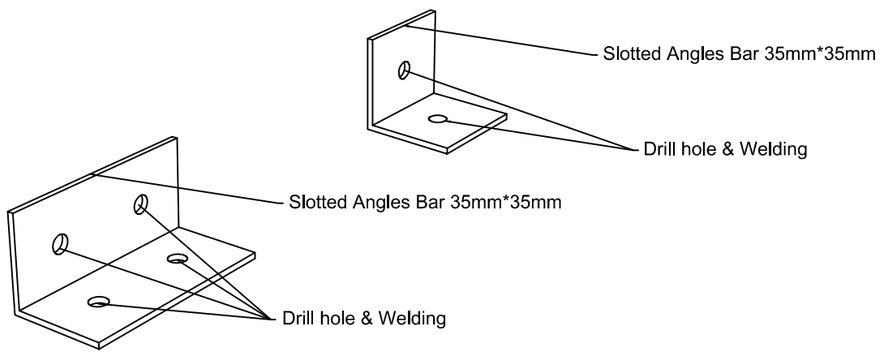

20

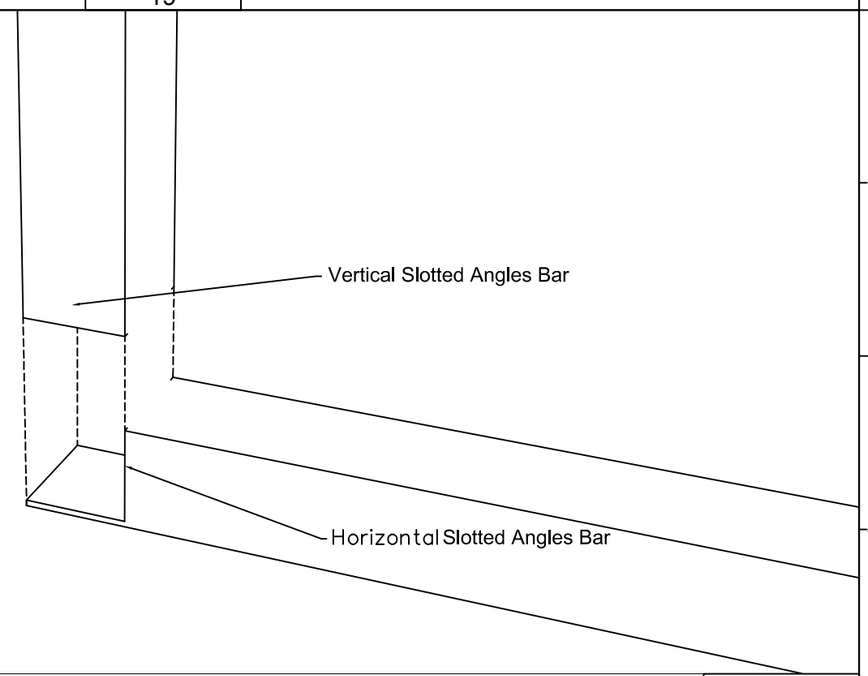

21

Solar Decathlon Europe

Project: ORCHID HOUSE

Institution: 國立交通大學 National Chiao Tung University

NCTU Architecture 國立交通大學建築研究所

Team Name: NCTU/UNICODE

Address: 1001 Ta-Hsueh Road
Hsinchu City 30010
Taiwan

Contact: www.sde.tw

Consultants:

Note:

Mark	Date	Description
DN	2013/04/01	SD Submission
DN	2013/07/01	DDc Submission
ST	2013/11/01	DD Submission
ST	2014/03/03	CD Submission
ST	2014/04/30	CD Submission
ST	2014/06/02	CD Submission

Drawn by	JL
Checked by	DN
Scale	1:04
Unit	mm

DWG. Title: THERMAL WALL DETAILS 11

DWG. No. AR-441

PAGE 89

TEMPERATURE (°C)

LOCATION: TAIPEI, TWN

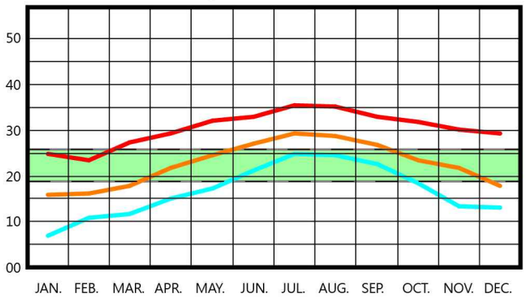

RANGE OF OUTDOOR TEMPERATURE FOR COMFORTABLE INDOOR TEMPERATURE

MAXIMUM TEMPERATURE

AVERAGE TEMPERATURE

MINIMUM TEMPERATURE

HUMIDITY (%)

LOCATION: TAIPEI, TWN

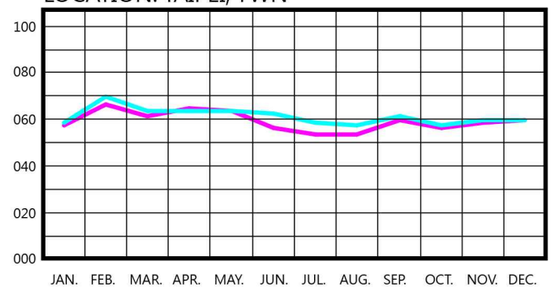

RELATIVE HUMIDITY (09:00AM)

RELATIVE HUMIDITY (03:00PM)

DEGREE HOURS

(HEATING,COOLING AND SOLAR)

LOCATION: TAIPEI, TWN

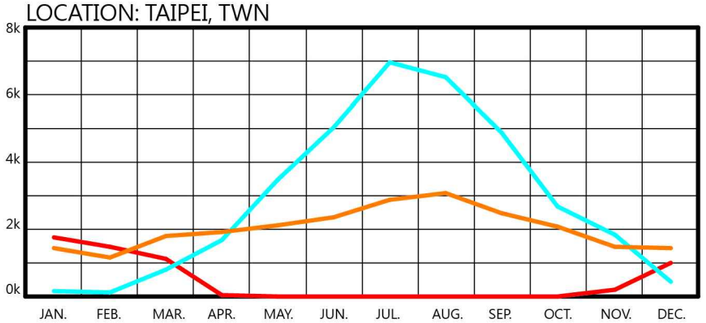

DEGREE-HOURS	ANNUAL
HEATING DEGREE-HOURS	5795
SOLAR EXCESS DEGREE-HOURS	24511
COOLING DEGREE-HOURS	34668

PSYCHROMETRIC CHART

LOCATION: TAIPEI, TWN

DISPLAY: Monthly Mean Minimum/Maximum

BAROMETRIC PRESSURE: 101.36 kPa

SELECTED DESIGN TECHNIQUES:

1. passive solar heating
2. thermal mass effects
3. natural ventilation
4. direct evaporative cooling

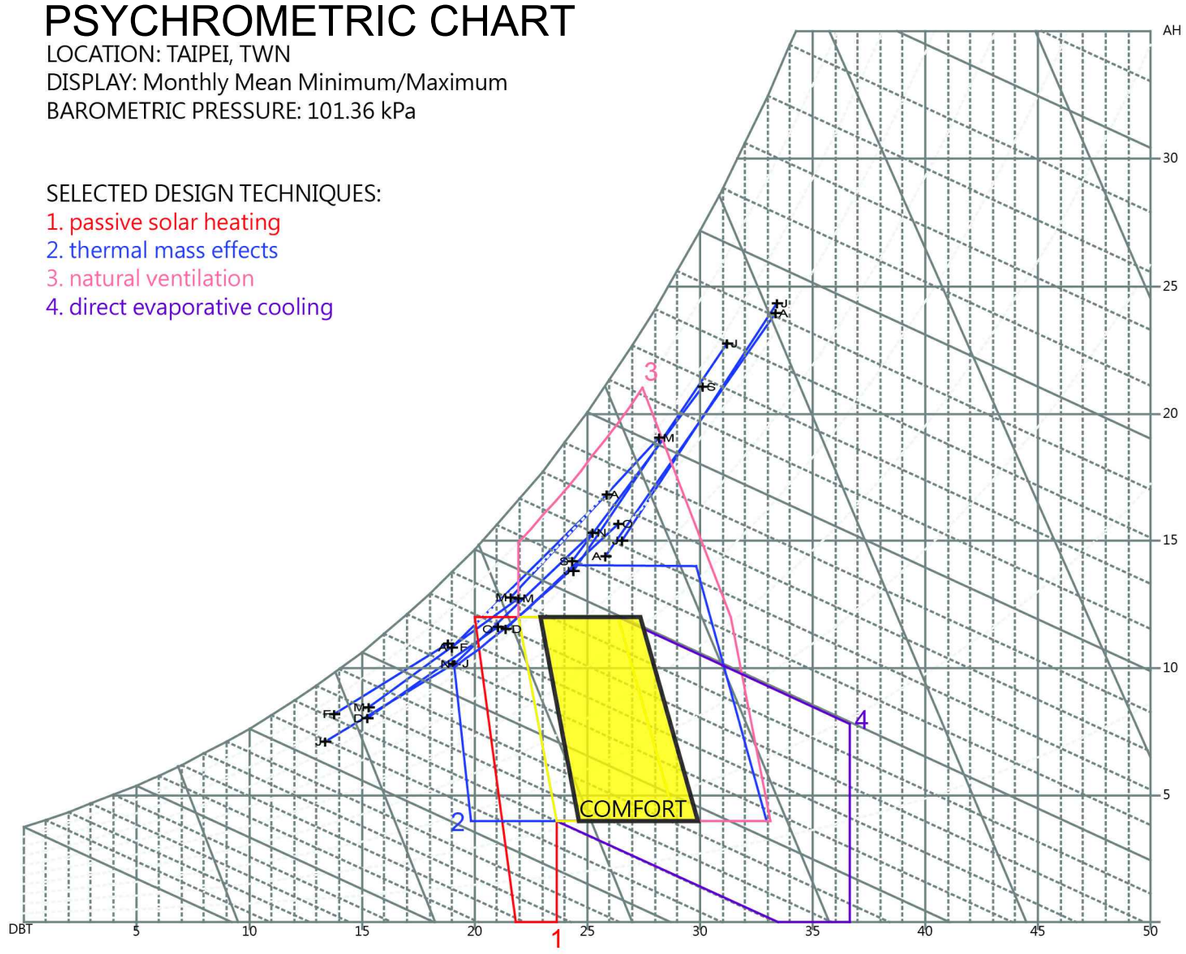

Solar Decathlon Europe

Project: ORCHID HOUSE

Institution: 國立交通大學 National Chiao Tung University

NCTU Architecture 國立交通大學建築研究所

Team Name: NCTU/UNICODE

Address: 1001 Ta-Hsueh Road Hsinchu City 30010 Taiwan

Contact: www.sde.tw

Consultants:

Note:

Mark	Date	Description
DN	2013/04/01	SD Submission
DN	2013/07/01	DDc Submission
ST	2013/11/01	DD Submission
ST	2014/03/03	CD Submission
ST	2014/04/30	CD Submission
ST	2014/06/02	CD Submission

Drawn by: JL

Checked by: DN

Scale: -

Unit: -

DWG. Title: TAIPEI CLIMATE ANALYSIS

DWG. No.: BA-001

PAGE: 90

RADIATION (W/m)

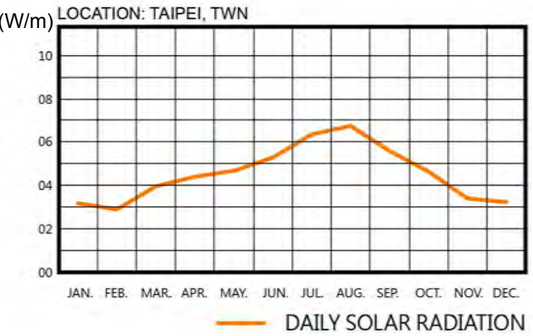

BASIC CLIMATIC CONDITION

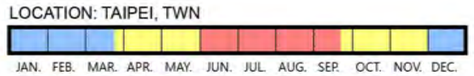

OVERHEATED PERIOD
(JUN.01-SEP.21)

UNDERHEATED PERIOD
(DEC.01-MAR.21)

COMFORTABLE PERIOD
(MAR.21-JUN.01 & SEP.21-DEC.01)

SOLAR PATH DIAGRAM

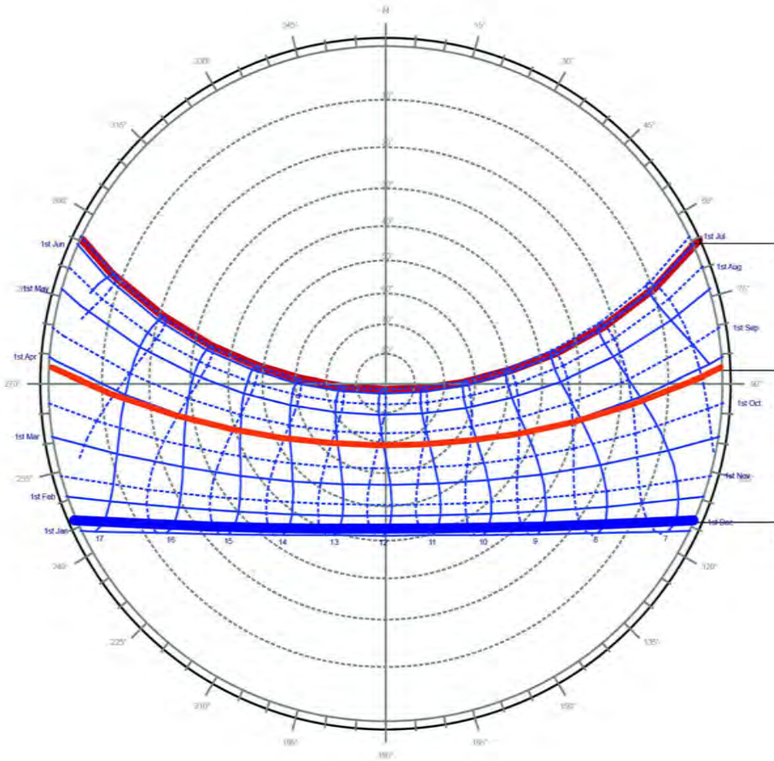

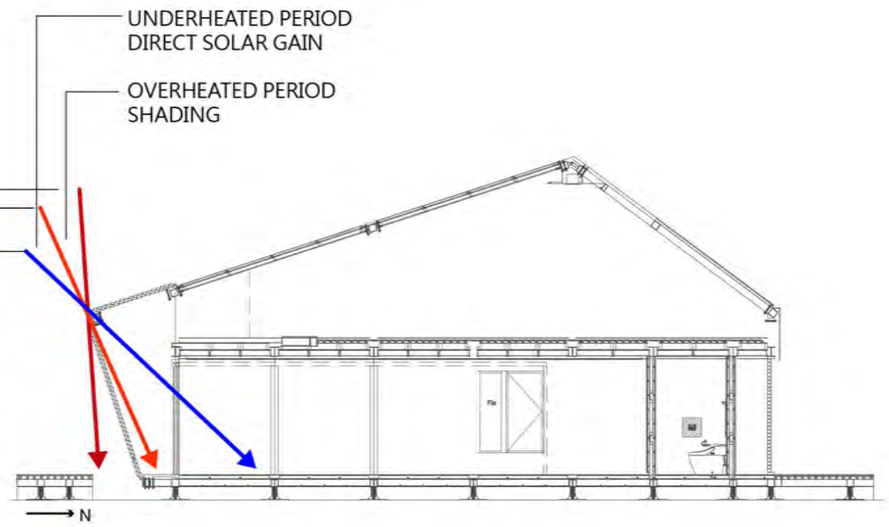

Date: December 22st

Date: September 21st
ANGLE : 65.7°

Date: March 21st
ANGLE : 66.2°

Date: June 22nd

Solar Decathlon Europe

Project: ORCHID HOUSE

Institution: 國立交通大學 National Chiao Tung University

NCTU Architecture 國立交通大學建築研究所

Team Name: NCTU/UNICODE

Address: 1001 Ta-Hsueh Road
Hsinchu City 30010
Taiwan

Contact: www.sde.tw

Consultants:

Note:

Mark	Date	Description
DN	2013/04/01	SD Submission
DN	2013/07/01	DDc Submission
ST	2013/11/01	DD Submission
ST	2014/03/03	CD Submission
ST	2014/04/30	CD Submission
ST	2014/06/02	CD Submission

Drawn by: JL

Checked by: DN

Scale: -

Unit: -

DWG. Title: TAIPEI SHADING ANALYSIS

DWG. No.: BA-002

PAGE: 91

PREVAILING WINDS

Wind Frequency (Hrs)
Location: TAIPEI, TWN
Date: January 1st - December 31st
Time: 00:00 - 24:00

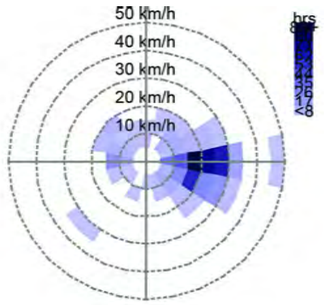

January

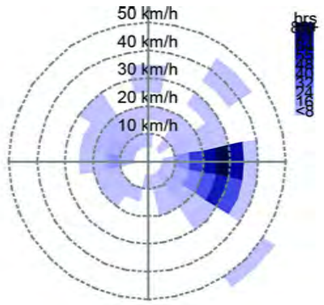

February

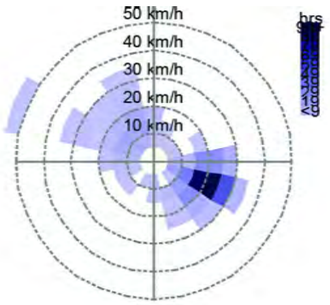

March

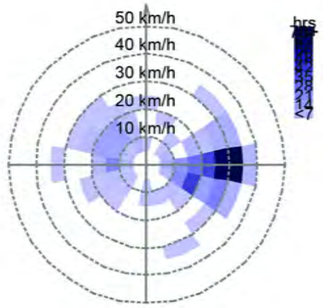

April

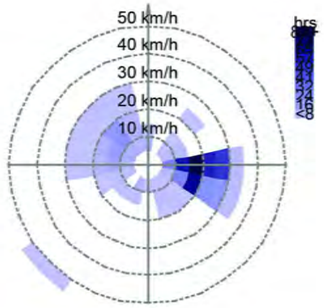

May

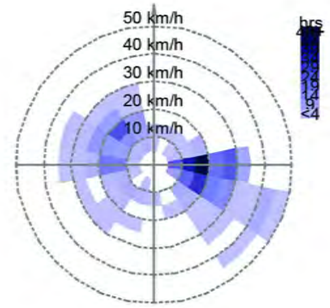

June

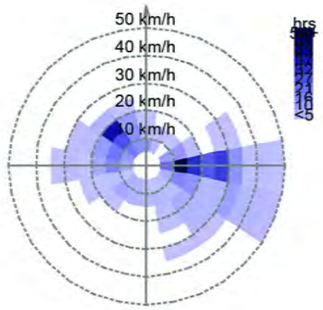

July

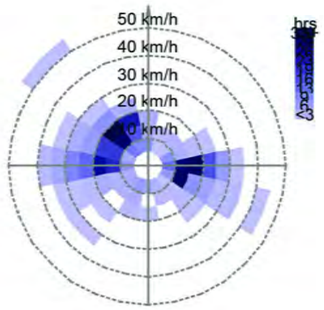

August

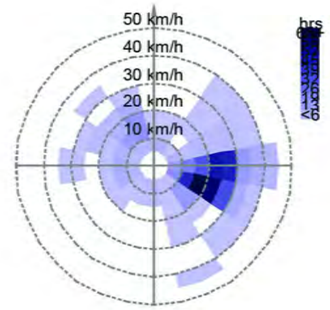

September

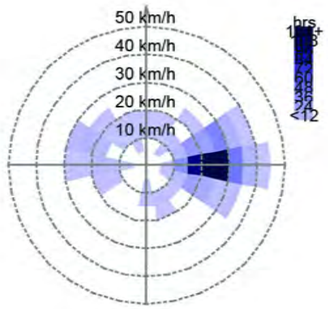

October

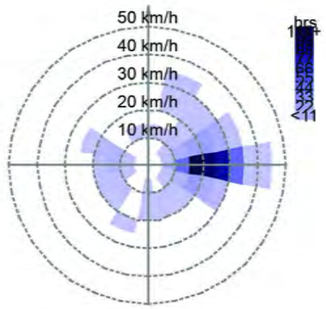

November

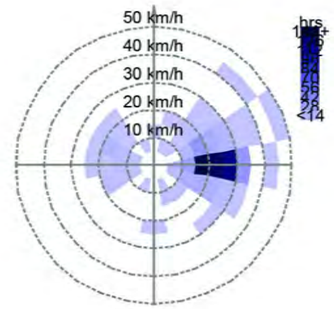

December

Solar Decathlon Europe

Project: ORCHID HOUSE

Institution: 國立交通大學 National Chiao Tung University

NCTU Architecture 國立交通大學建築研究所

Team Name: NCTU/UNICODE
Address: 1001 Ta-Hsueh Road Hsinchu City 30010 Taiwan
Contact: www.sde.tw

Consultants:

Note:

Mark	Date	Description
DN	2013/04/01	SD Submission
DN	2013/07/01	DDc Submission
ST	2013/11/01	DD Submission
ST	2014/03/03	CD Submission
ST	2014/04/30	CD Submission
ST	2014/06/02	CD Submission

Drawn by	JL
Checked by	DN
Scale	-
Unit	-

DWG. Title: TAIPEI WIND ROSE ANALYSIS

DWG. No. BA-003

PAGE 92

TEMPERATURE (°C)

LOCATION: PARIS_ ORLY, FRA

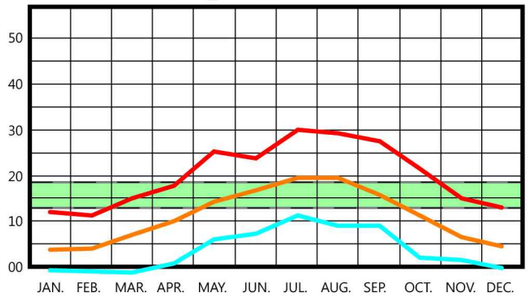

RANGE OF OUTDOOR TEMPERATURE FOR COMFORTABLE INDOOR TEMPERATURE

MAXIMUM TEMPERATURE

AVERAGE TEMPERATURE

MINIMUM TEMPERATURE

HUMIDITY (%)

LOCATION: PARIS_ ORLY, FRA

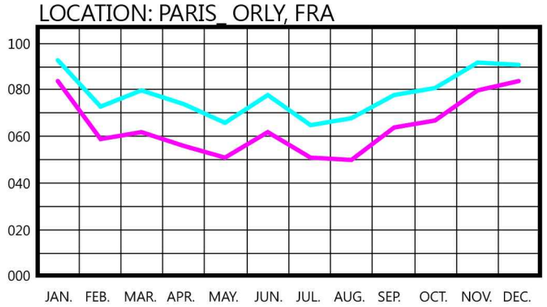

RELATIVE HUMIDITY (09:00AM)

RELATIVE HUMIDITY (03:00PM)

DEGREE HOURS

(HEATING,COOLING AND SOLAR)

LOCATION: PARIS_ ORLY, FRA

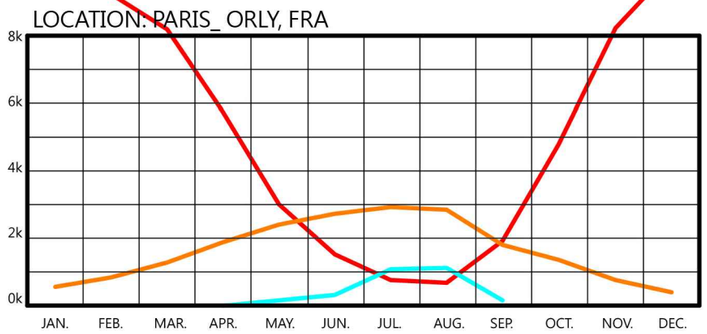

DEGREE-HOURS	ANNUAL
HEATING DEGREE-HOURS	64193
SOLAR EXCESS DEGREE-HOURS	19993
COOLING DEGREE-HOURS	2929

PSYCHROMETRIC CHART

LOCATION: PARIS_ ORLY, FRA
DISPLAY: Monthly Mean Minimum/Maximum
BAROMETRIC PRESSURE: 101.36 kPa

SELECTED DESIGN TECHNIQUES:

1. passive solar heating
2. thermal mass effects
3. natural ventilation
4. direct evaporative cooling

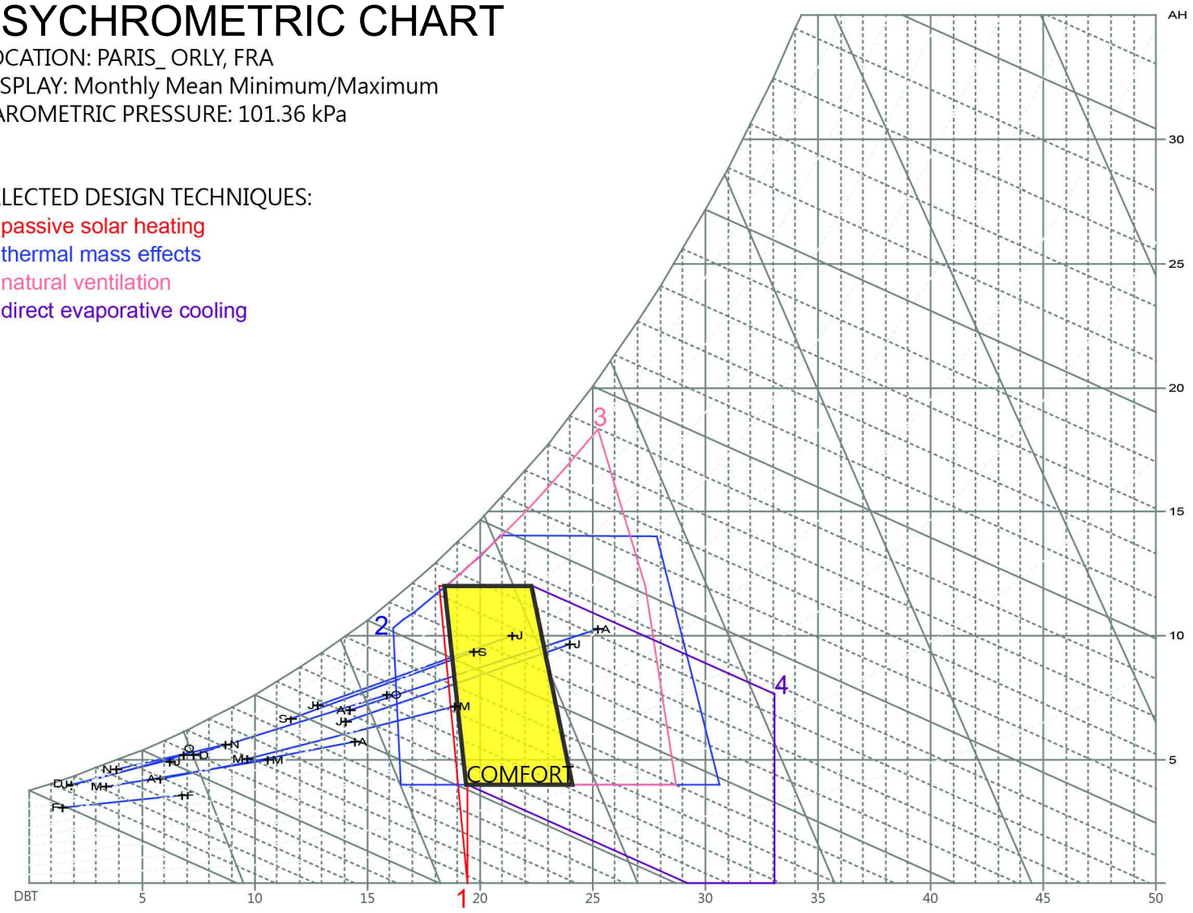

Solar Decathlon Europe

Project: ORCHID HOUSE

Institution: 國立交通大學 National Chiao Tung University

NCTU Architecture 國立交通大學建築研究所

Team Name: NCTU/UNICODE

Address: 1001 Ta-Hsueh Road Hsinchu City 30010 Taiwan

Contact: www.sde.tw

Consultants:

Note:

Mark	Date	Description
DN	2013/04/01	SD Submission
DN	2013/07/01	DDc Submission
ST	2013/11/01	DD Submission
ST	2014/03/03	CD Submission
ST	2014/04/30	CD Submission
ST	2014/06/02	CD Submission

Drawn by: JL

Checked by: DN

Scale: -

Unit: -

DWG. Title: VERSAILLES CLIMATE ANALYSIS

DWG. No.: BA-004

PAGE: 93

RADIATION (W/m)

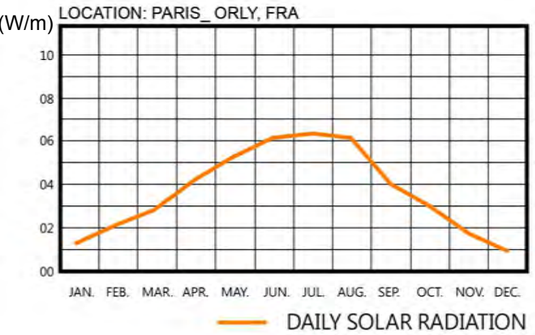

BASIC CLIMATIC CONDITION

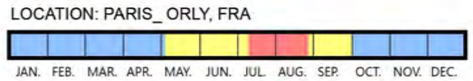

OVERHEATED PERIOD

UNDERHEATED PERIOD

COMFORTABLE PERIOD

SOLAR PATH DIAGRAM

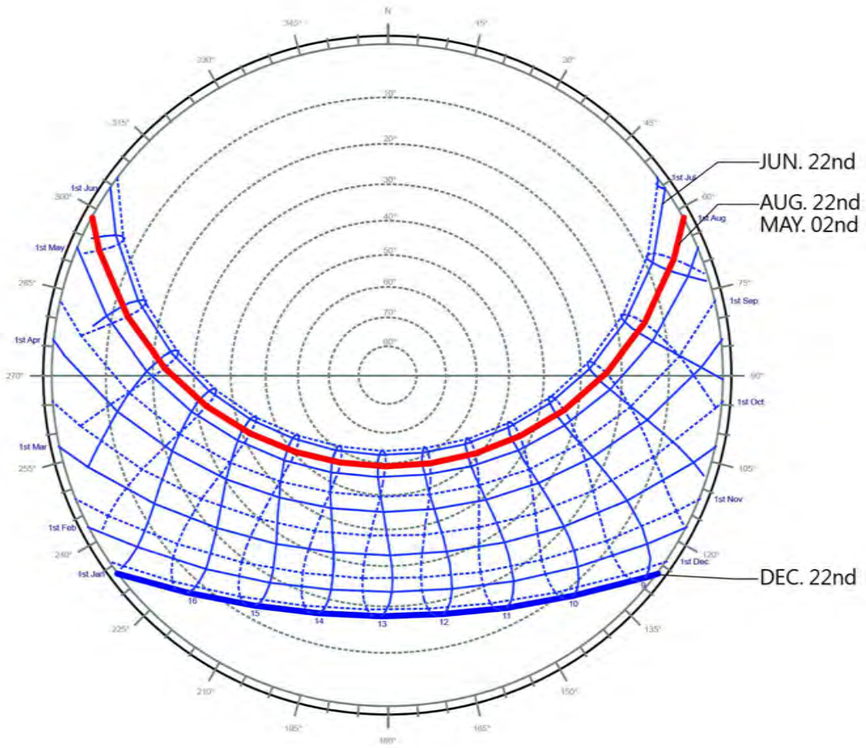

Solar Decathlon Europe

Project: ORCHID HOUSE

Institution: 國立交通大學 National Chiao Tung University

NCTU Architecture 國立交通大學建築研究所

Team Name: NCTU/UNICODE

Address: 1001 Ta-Hsueh Road Hsinchu City 30010 Taiwan

Contact: www.sde.tw

Consultants:

Note:

Mark	Date	Description
DN	2013/04/01	SD Submission
DN	2013/07/01	DDc Submission
ST	2013/11/01	DD Submission
ST	2014/03/03	CD Submission
ST	2014/04/30	CD Submission
ST	2014/06/02	CD Submission

Drawn by: JL

Checked by: DN

Scale: -

Unit: -

DWG. Title: VERSAILLES SHADING ANALYSIS

DWG. No.: BA-005

PAGE: 94

PREVAILING WINDS

Wind Frequency (Hrs)
Location: PARIS_ ORLY, FRA
Date: 1st January - 31st December
Time: 00:00 - 24:00

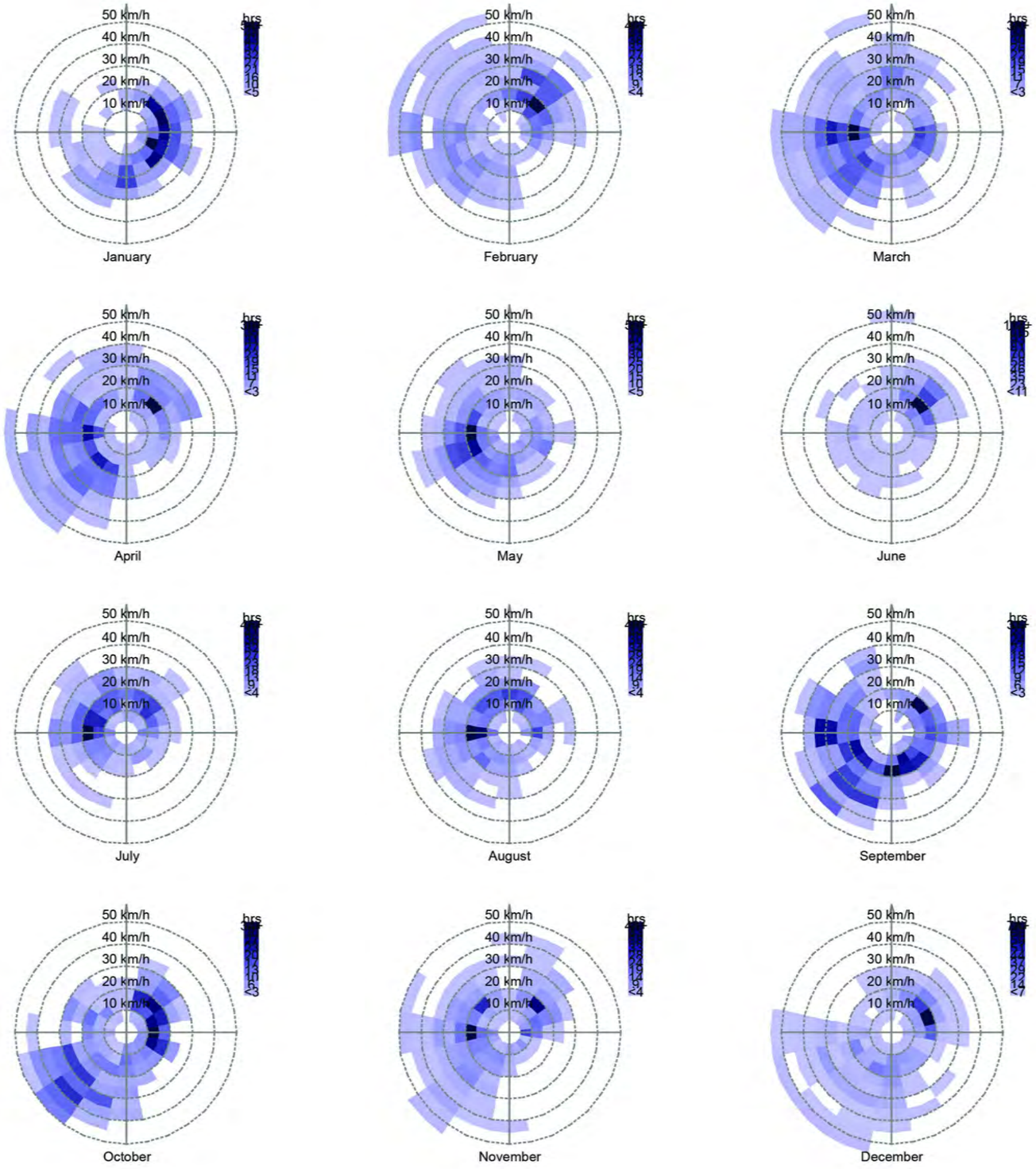

Solar Decathlon Europe

Project: ORCHID HOUSE

Institution: 國立交通大學 National Chiao Tung University

NCTU Architecture 國立交通大學建築研究所

Team Name: NCTU/UNICODE
Address: 1001 Ta-Hsueh Road
Hsinchu City 30010
Taiwan
Contact: www.sde.tw

Consultants:

Note:

Mark	Date	Description
DN	2013/04/01	SD Submission
DN	2013/07/01	DDc Submission
ST	2013/11/01	DD Submission
ST	2014/03/03	CD Submission
ST	2014/04/30	CD Submission
ST	2014/06/02	CD Submission

Drawn by	JL
Checked by	DN
Scale	-
Unit	-

DWG. Title: VERSAILLES WIND ROSE ANALYSIS

DWG. No. BA-006

PAGE 95

HEATING	ACTIVE	HIGH ENERGY CONSUMPTION	HEAT PUMP HEATING	BA.021
	SEMI-PASSIVE		HEAT EXCHANGER PREHEATED BY SOLAR HOT WATER	BA.020
	PASSIVE	LOW ENERGY CONSUMPTION	THERMAL WALL	BA.018.019
			GREEN HOUSE EFFECT	BA.017
			DIRECT SOLAR GAIN	BA.016
COOLING	PASSIVE	LOW ENERGY CONSUMPTION	SHADING	BA.016
			NATURAL VENTILATION	BA.012
	SEMI-PASSIVE		SOLAR CHIMNEY	BA.013
			HEAT SINK AND VEGETATION COOLING	BA.014
			EVAPORATIVE COOLING	BA.015
	ACTIVE	HIGH ENERGY CONSUMPTION	HEAT PUMP COOLING	BA.021

Solar Decathlon Europe

Project: ORCHID HOUSE

Institution: 國立交通大學 National Chiao Tung University

NCTU Architecture 國立交通大學建築研究所

Team Name: NCTU/UNICODE

Address: 1001 Ta-Hsueh Road Hsinchu City 30010 Taiwan

Contact: www.sde.tw

Consultants:

Note:

Mark	Date	Description
DN	2013/04/01	SD Submission
DN	2013/07/01	DDc Submission
ST	2013/11/01	DD Submission
ST	2014/03/03	CD Submission
ST	2014/04/30	CD Submission
ST	2014/06/02	CD Submission

Drawn by: JL

Checked by: DN

Scale: -

Unit: -

DWG. Title: BIOCLIMATIC STRATEGIES

DWG. No.: BA-011

PAGE: 96

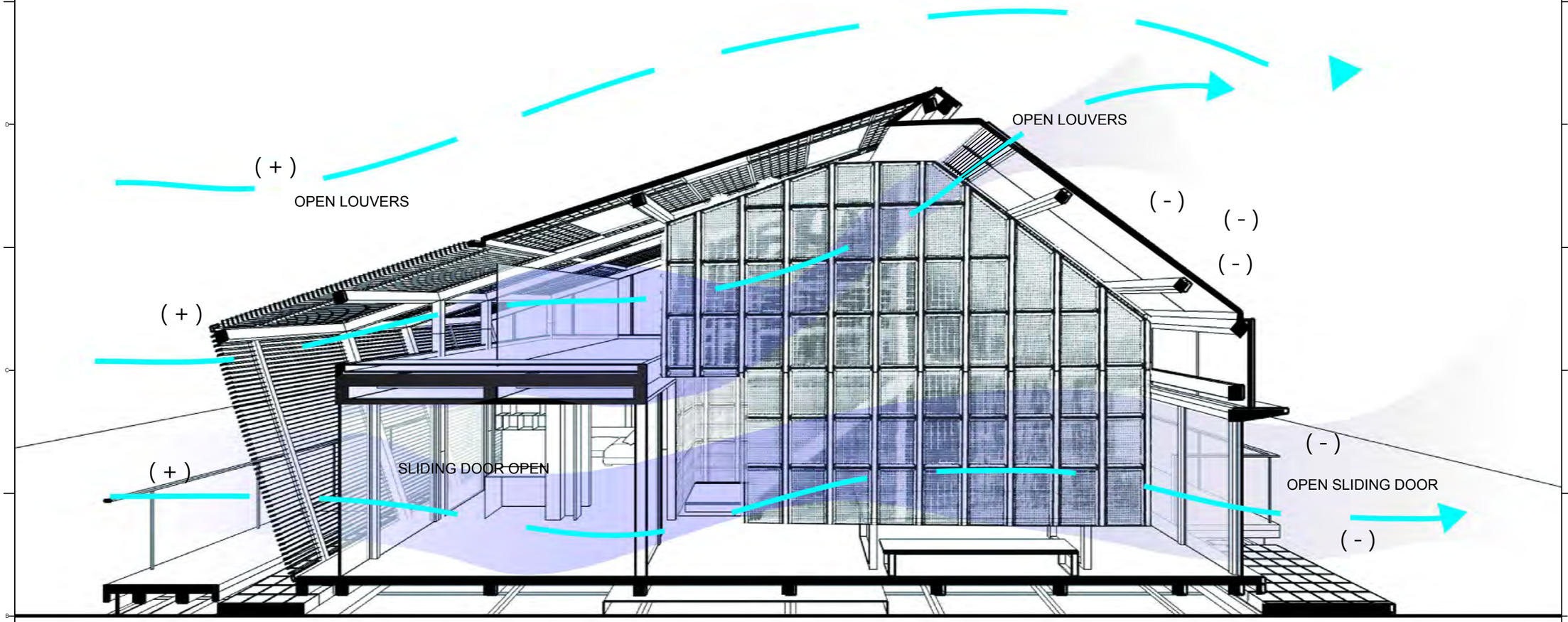

N

OUTDOOR TEMPERATURE UNDER19°C WITH WIND

Solar Decathlon Europe

Project: ORCHID HOUSE

Institution: 國立交通大學 National Chiao Tung University

NCTU Architecture 國立交通大學建築研究所

Team Name: NCTU/UNICODE

Address: 1001 Ta-Hsueh Road Hsinchu City 30010 Taiwan

Contact: www.sde.tw

Consultants:

Note:

Mark	Date	Description
DN	2013/04/01	SD Submission
DN	2013/07/01	DDc Submission
ST	2013/11/01	DD Submission
ST	2014/03/03	CD Submission
ST	2014/04/30	CD Submission
ST	2014/06/02	CD Submission

Drawn by JL

Checked by LY

Scale -

Unit -

DWG. Title

NATURAL VENTILATION

DWG. No. BA-012

PAGE 97

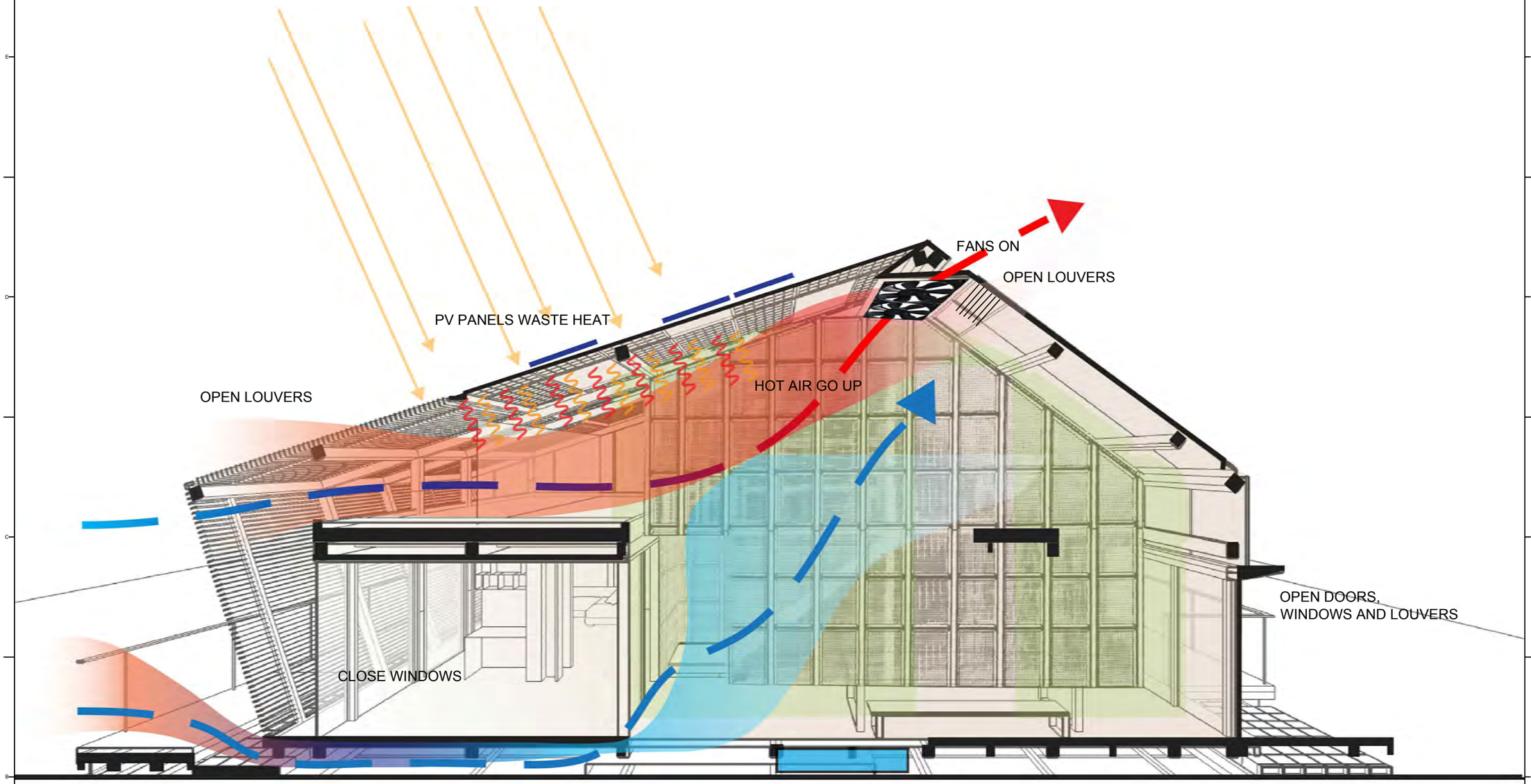

N

EXTERIOR TEMPERATURE UNDER 19°C
NO WIND

Solar Decathlon Europe

Project: ORCHID HOUSE

Institution: 國立交通大學 National Chiao Tung University

NCTU Architecture 國立交通大學建築研究所

Team Name: NCTU/UNICODE

Address: 1001 Ta-Hsueh Road
Hsinchu City 30010
Taiwan

Contact: www.sde.tw

Consultants:

Note:

Mark	Date	Description
DN	2013/04/01	SD Submission
DN	2013/07/01	DDc Submission
ST	2013/11/01	DD Submission
ST	2014/03/03	CD Submission
ST	2014/04/30	CD Submission
ST	2014/06/02	CD Submission

Drawn by JL

Checked by LY

Scale -

Unit -

DWG. Title

SOLAR CHIMNEY

DWG. No. BA-013

PAGE 98

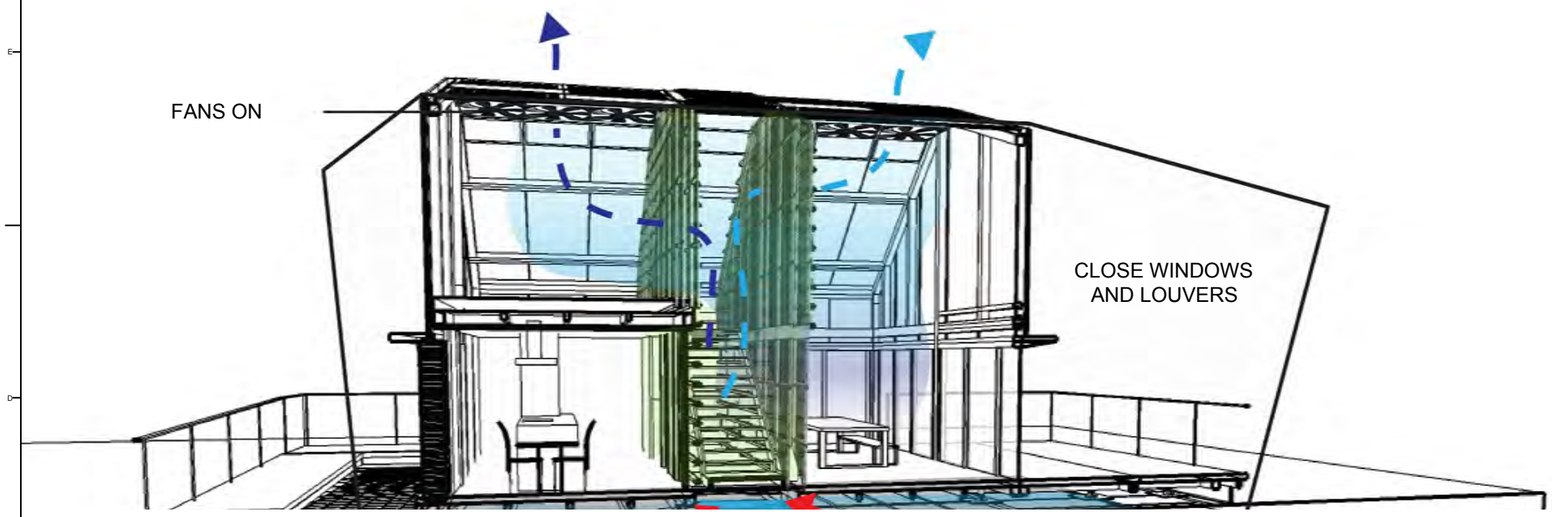

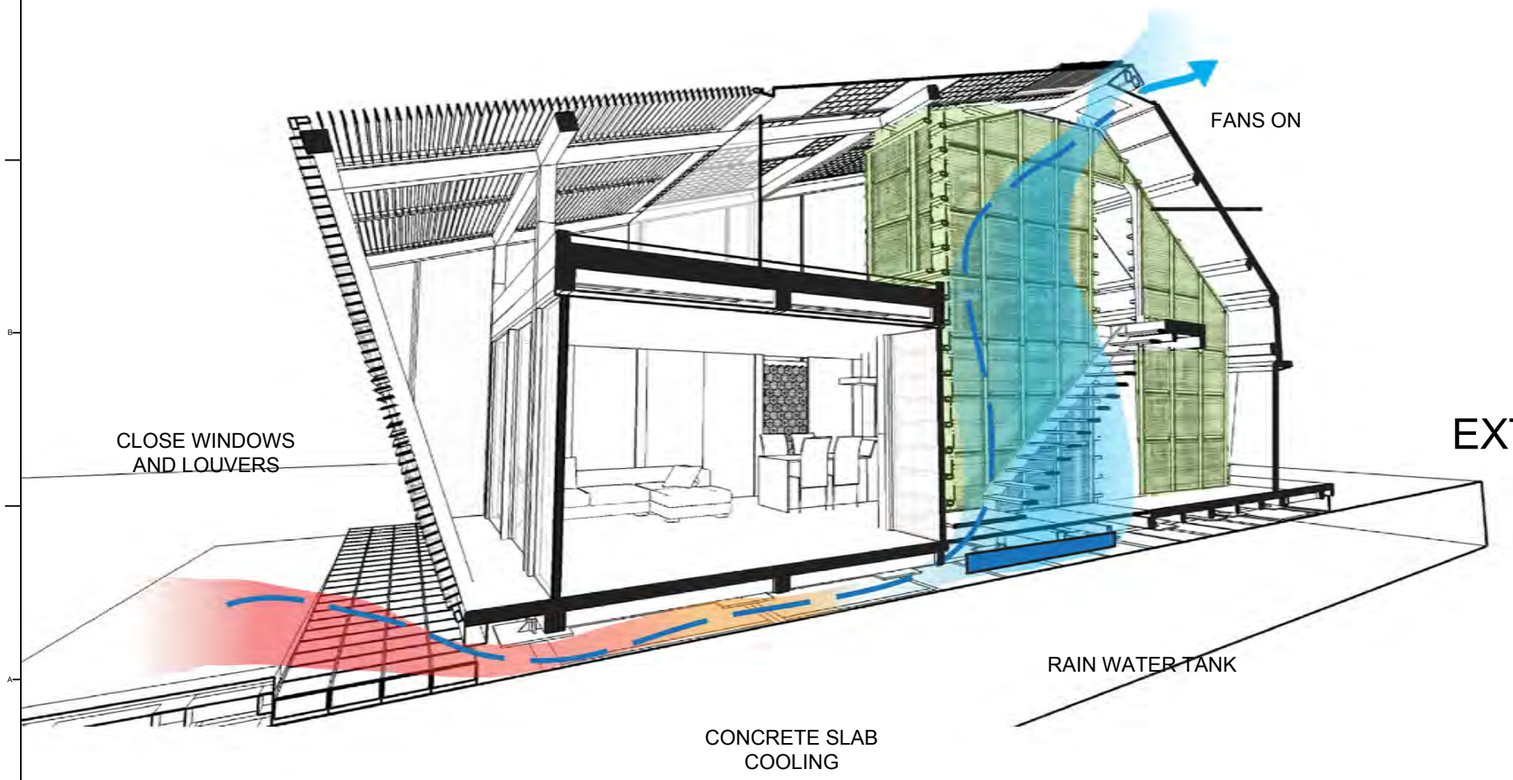

EXTERIOR TEMPERATURE ABOVE 26°C

Solar Decathlon Europe

Project: ORCHID HOUSE

Institution: 國立交通大學 National Chiao Tung University

NCTU Architecture 國立交通大學建築研究所

Team Name: NCTU/UNICODE

Address: 1001 Ta-Hsueh Road
Hsinchu City 30010
Taiwan

Contact: www.sde.tw

Consultants:

Note:

Mark	Date	Description
DN	2013/04/01	SD Submission
DN	2013/07/01	DDc Submission
ST	2013/11/01	DD Submission
ST	2014/03/03	CD Submission
ST	2014/04/30	CD Submission
ST	2014/06/02	CD Submission

Drawn by	JL
Checked by	LY
Scale	-
Unit	-

DWG. Title

HEAT SINK AND VEGETATION COOLING

DWG. No. BA-014

PAGE 99

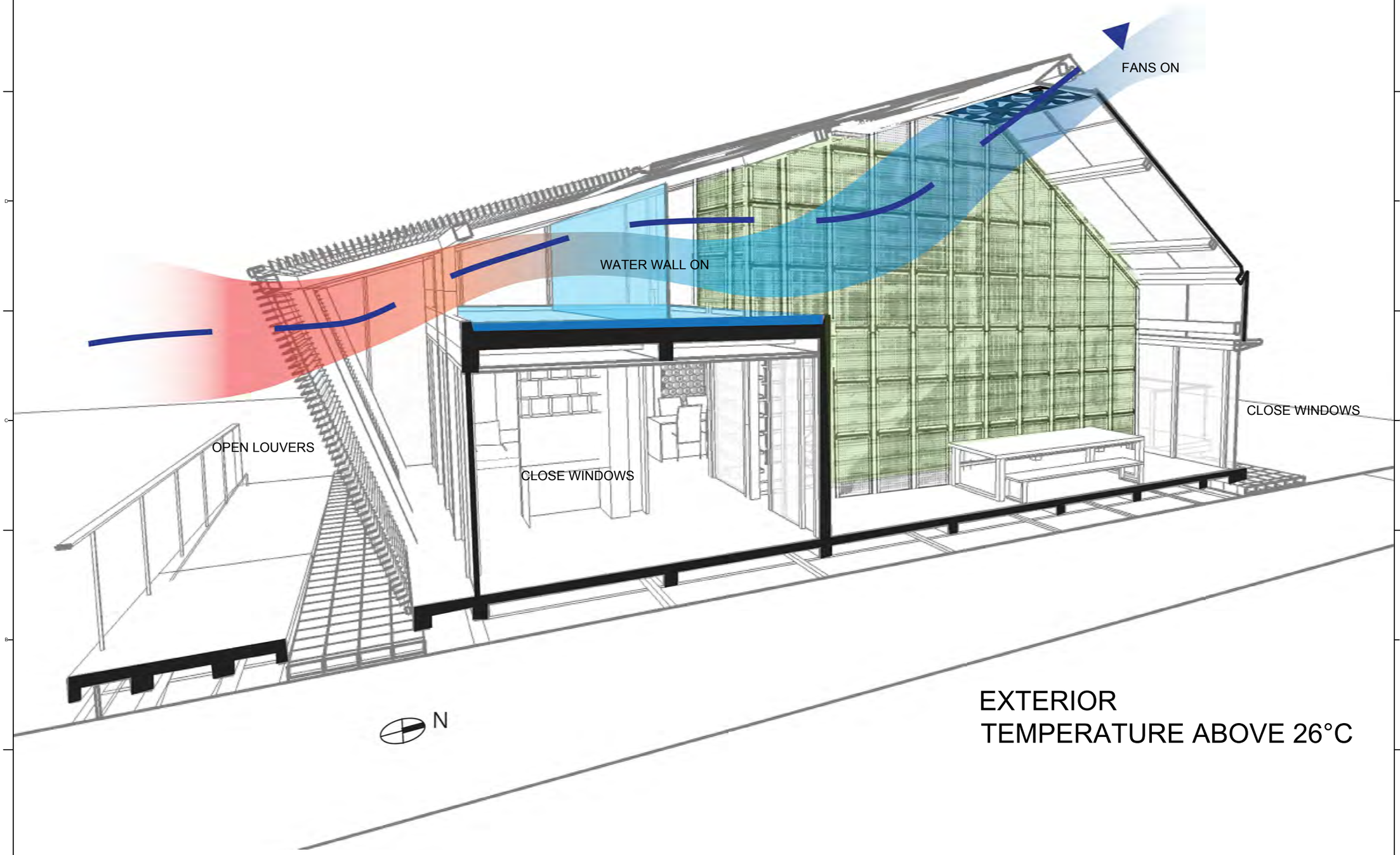

EXTERIOR
TEMPERATURE ABOVE 26°C

Solar Decathlon Europe

Project: ORCHID HOUSE

Institution: 國立交通大學 National Chiao Tung University

NCTU Architecture 國立交通大學建築研究所

Team Name: NCTU/UNICODE
Address: 1001 Ta-Hsueh Road
Hsinchu City 30010
Taiwan
Contact: www.sde.tw

Consultants:

Note:

Mark	Date	Description
DN	2013/04/01	SD Submission
DN	2013/07/01	DDc Submission
ST	2013/11/01	DD Submission
ST	2014/03/03	CD Submission
ST	2014/04/30	CD Submission
ST	2014/06/02	CD Submission

Drawn by	JL
Checked by	LY
Scale	-
Unit	-

DWG. Title: EVAPORATIVE COOLING

DWG. No. BA-015

PAGE 100

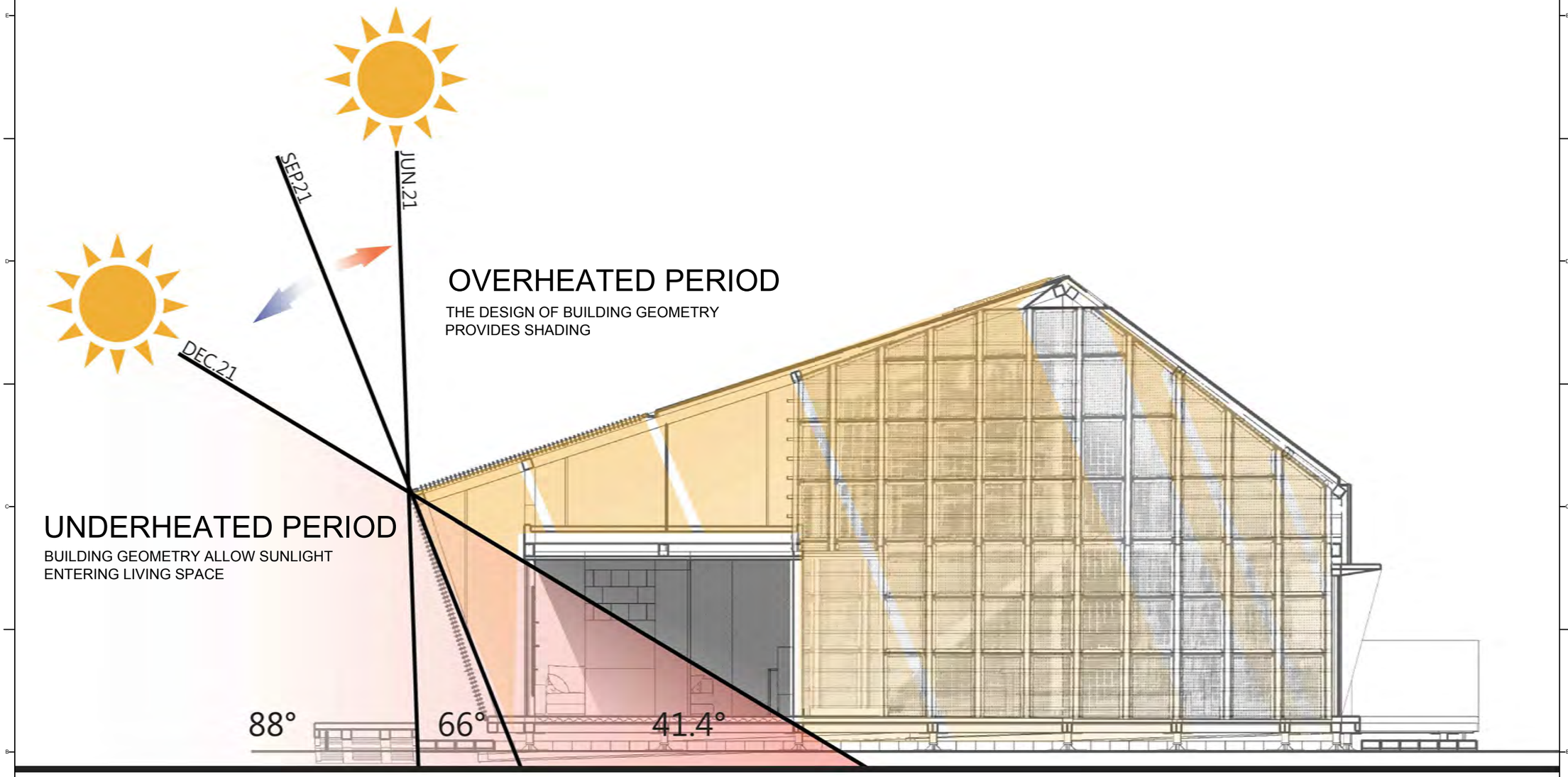

THE HEIGHEST
ANGLE OF THE SUN

SEP.21;MAR.21
OVERHEAT/UNDERHEAT
TRANSITION DATE
ANGLE OF THE SUN

THE LOWEST
ANGLE OF THE SUN

N

Solar Decathlon Europe

Project:

ORCHID HOUSE

Institution:

國立交通大學
National Chiao Tung University

NCTU Architecture
國立交通大學建築研究所

Team Name: NCTU/UNICODE

Address: 1001 Ta-Hsueh Road
Hsinchu City 30010
Taiwan

Contact: www.sde.tw

Consultants:

Note:

Mark	Date	Description
DN	2013/04/01	SD Submission
DN	2013/07/01	DDc Submission
ST	2013/11/01	DD Submission
ST	2014/03/03	CD Submission
ST	2014/04/30	CD Submission
ST	2014/06/02	CD Submission

Drawn by	JL
Checked by	LY
Scale	-
Unit	-

DWG. Title

DIRECT SOLAR GAIN

DWG. No. BA-016

PAGE 101

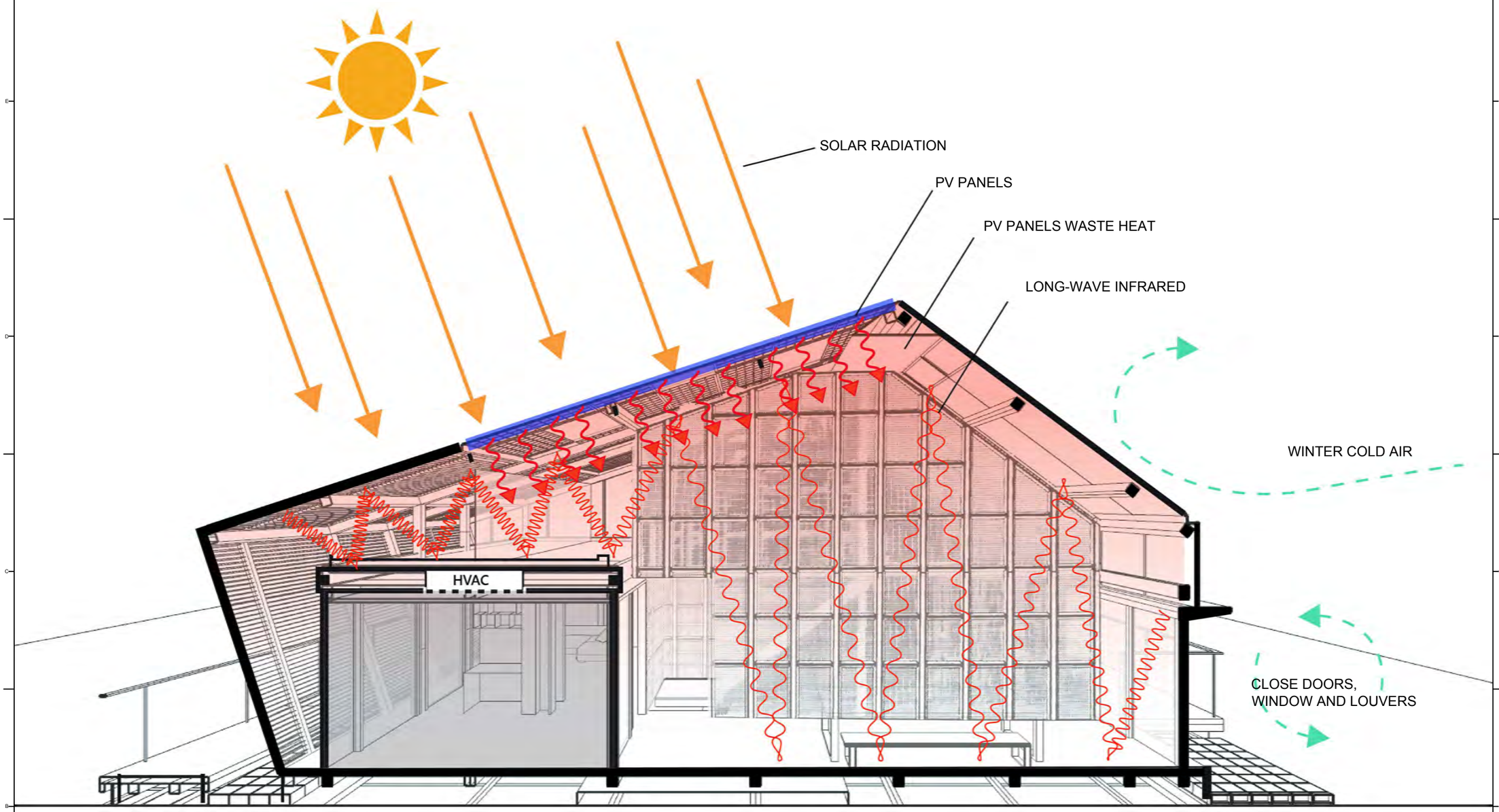

N

OUTDOOR TEMPERATURE
BELOW 26°C

Solar Decathlon Europe

Project: ORCHID HOUSE

Institution: 國立交通大學 National Chiao Tung University

NCTU Architecture 國立交通大學建築研究所

Team Name: NCTU/UNICODE

Address: 1001 Ta-Hsueh Road
Hsinchu City 30010
Taiwan

Contact: www.sde.tw

Consultants:

Note:

Mark	Date	Description
DN	2013/04/01	SD Submission
DN	2013/07/01	DDc Submission
ST	2013/11/01	DD Submission
ST	2014/03/03	CD Submission
ST	2014/04/30	CD Submission
ST	2014/06/02	CD Submission

Drawn by JL

Checked by LY

Scale -

Unit -

DWG. Title

GREEN HOUSE EFFECT

DWG. No. BA-017

PAGE 102

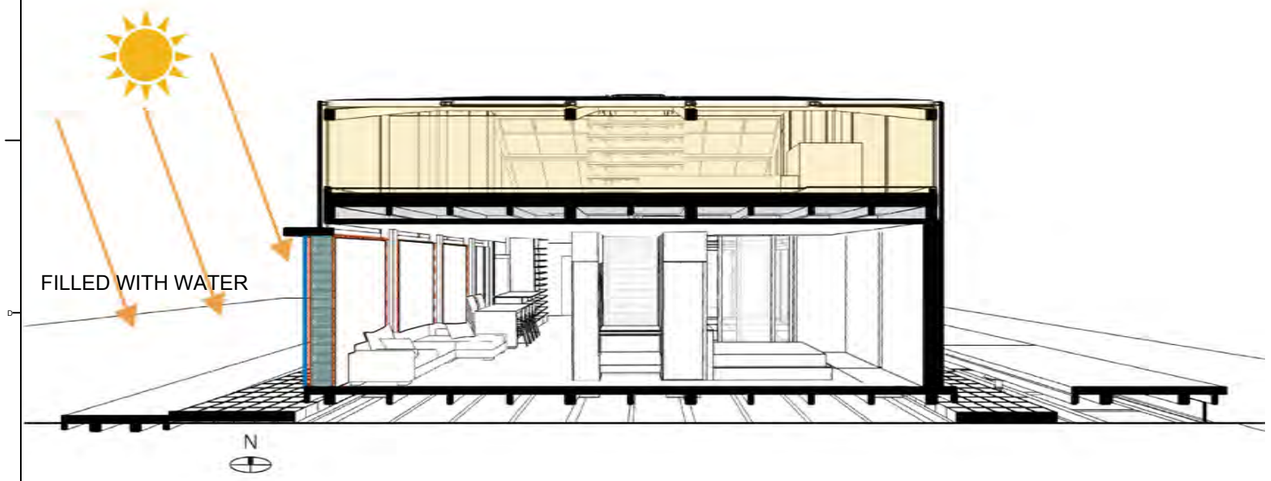

A 30cm water thermal wall is built on the west side of the hous Each bottle contains 6 litter of water. The bottles are piled to 2 meter height-wise and 3 meter length-wise. The bottles are held together and fixated to a transparent acrylic sheet on their exterior side.
eThe water in the thermal wall absorbs solar radiation during the day and releases heat to interior space at night.

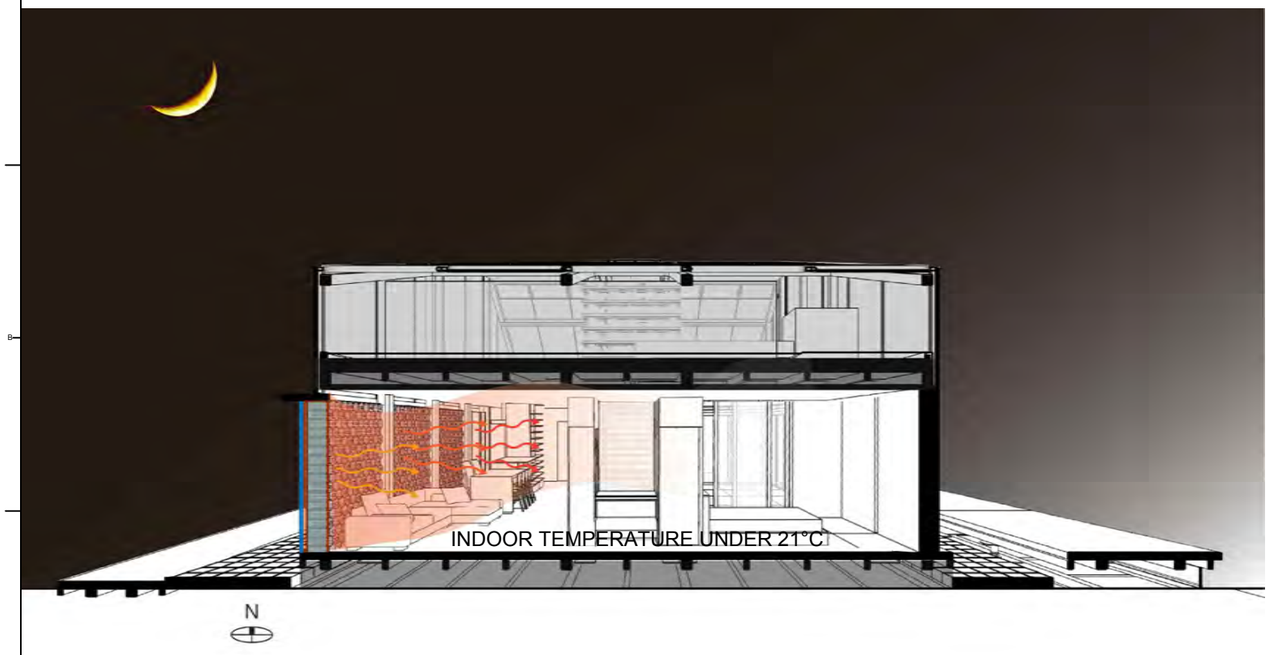

Solar Decathlon Europe

Project: ORCHID HOUSE

Institution: 國立交通大學 National Chiao Tung University

NCTU Architecture 國立交通大學建築研究所

Team Name: NCTU/UNICODE
Address: 1001 Ta-Hsueh Road Hsinchu City 30010 Taiwan
Contact: www.sde.tw

Consultants:

Note:

Mark	Date	Description
DN	2013/04/01	SD Submission
DN	2013/07/01	DDc Submission
ST	2013/11/01	DD Submission
ST	2014/03/03	CD Submission
ST	2014/04/30	CD Submission
ST	2014/06/02	CD Submission

Drawn by	JL
Checked by	LY
Scale	-
Unit	-

DWG. Title: THERMAL WALL IN VERSAILLES

DWG. No. BA-018

PAGE 103

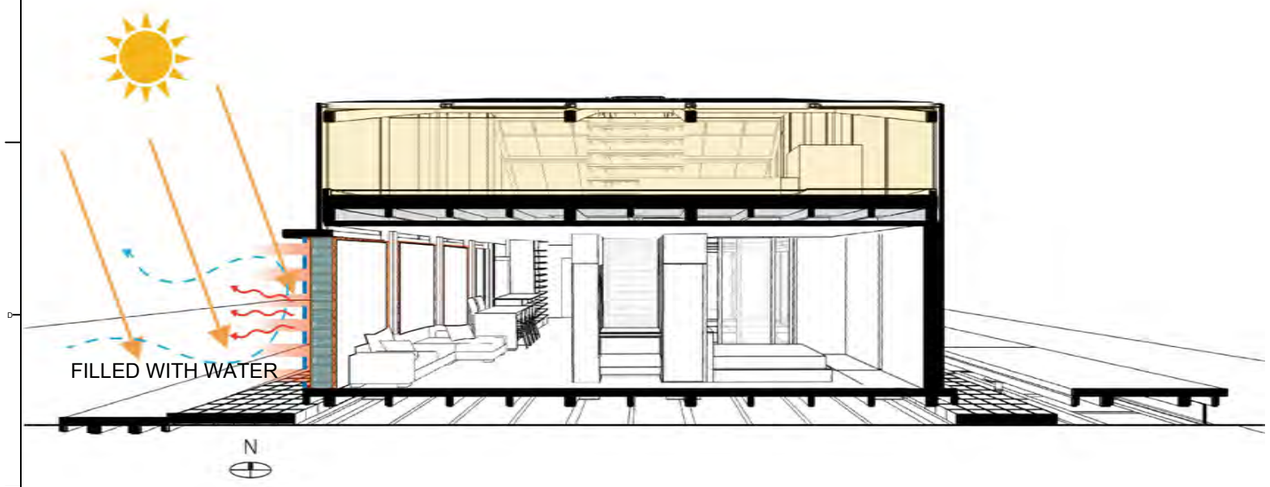

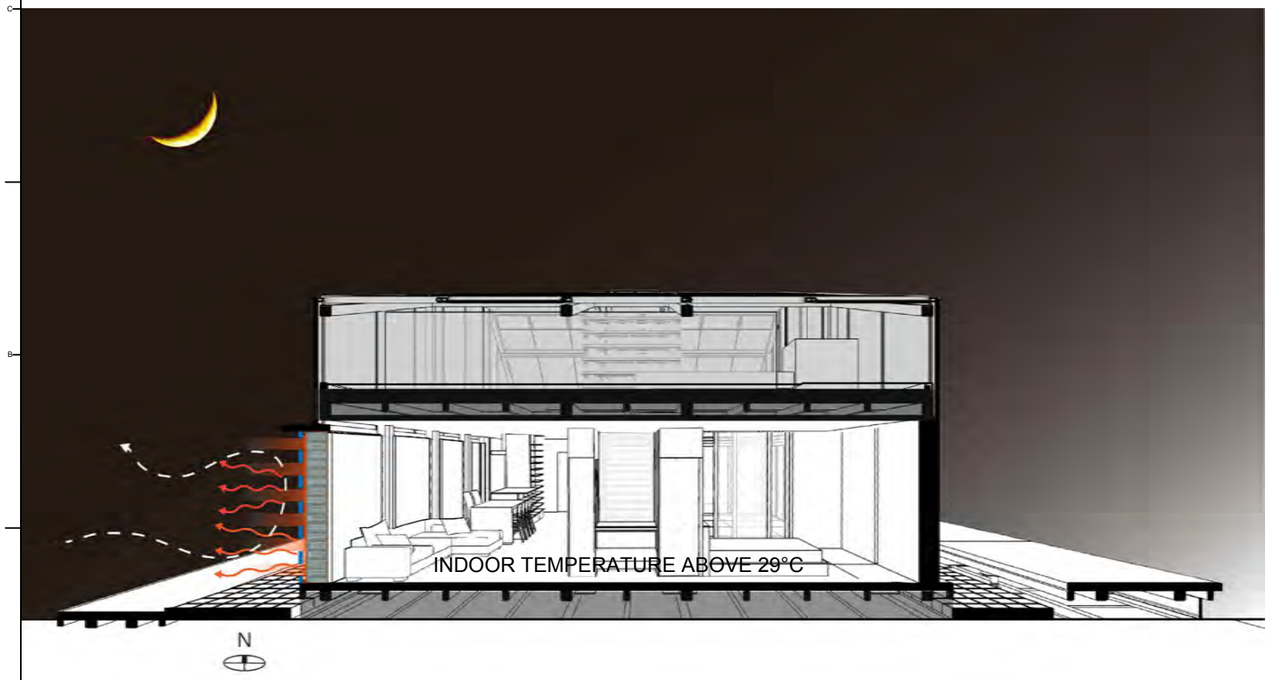

Solar Decathlon Europe

Project: ORCHID HOUSE

Institution: 國立交通大學 National Chiao Tung University

NCTU Architecture 國立交通大學建築研究所

Team Name: NCTU/UNICODE

Address: 1001 Ta-Hsueh Road
Hsinchu City 30010
Taiwan

Contact: www.sde.tw

Consultants:

Note:

Mark	Date	Description
DN	2013/04/01	SD Submission
DN	2013/07/01	DDc Submission
ST	2013/11/01	DD Submission
ST	2014/03/03	CD Submission
ST	2014/04/30	CD Submission
ST	2014/06/02	CD Submission

Drawn by	TW
Checked by	LY
Scale	-
Unit	-

DWG. Title

THERMAL WALL
IN TAIPEI

DWG. No. BA-019

PAGE 104

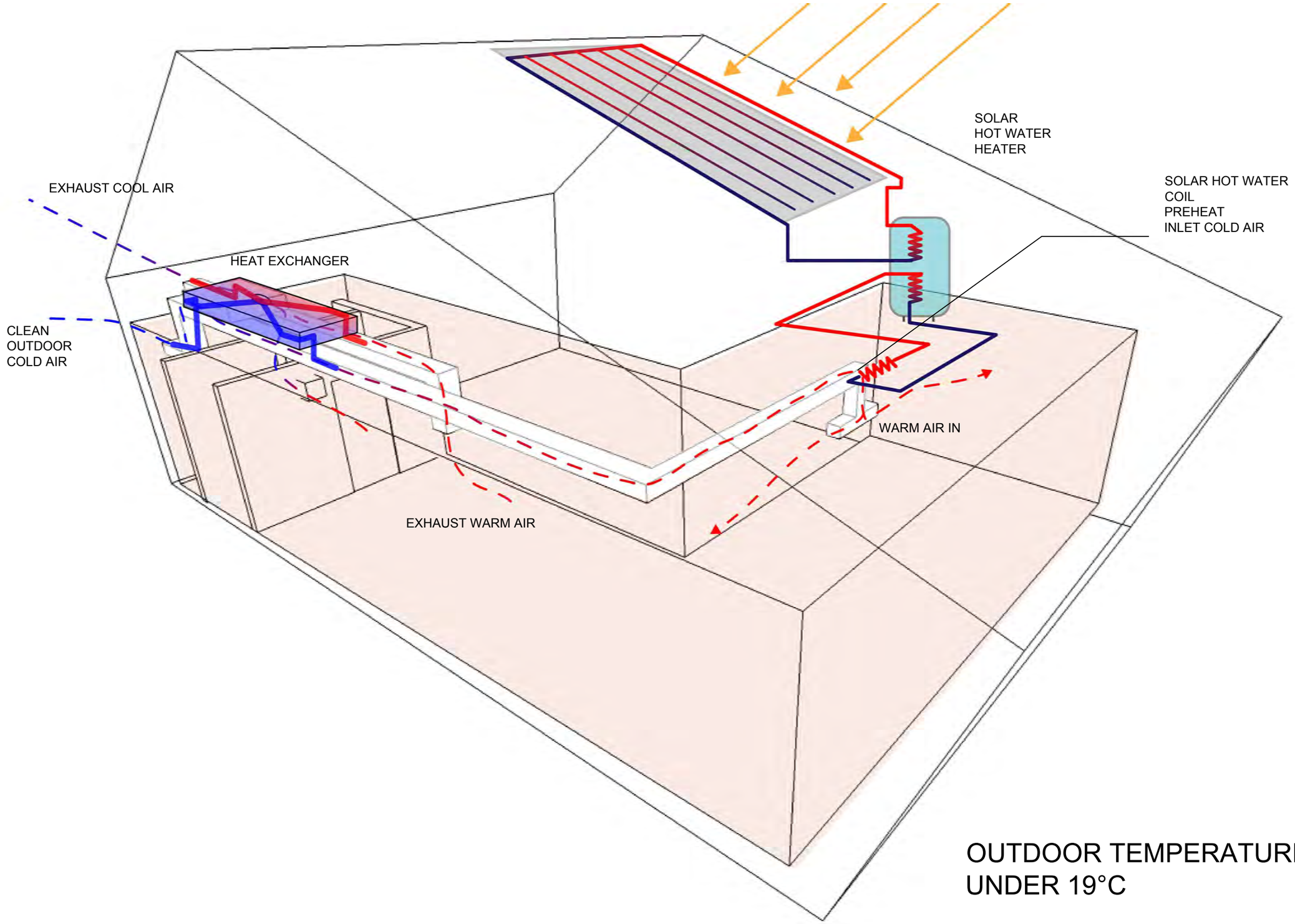

OUTDOOR TEMPERATURE
UNDER 19°C

Solar Decathlon Europe

Project: ORCHID HOUSE

Institution: 國立交通大學 National Chiao Tung University

NCTU Architecture 國立交通大學建築研究所

Team Name: NCTU/UNICODE

Address: 1001 Ta-Hsueh Road
Hsinchu City 30010
Taiwan

Contact: www.sde.tw

Consultants:

Note:

Mark	Date	Description
DN	2013/04/01	SD Submission
DN	2013/07/01	DDc Submission
ST	2013/11/01	DD Submission
ST	2014/03/03	CD Submission
ST	2014/04/30	CD Submission
ST	2014/06/02	CD Submission

Drawn by	JL
Checked by	LY
Scale	-
Unit	-

DWG. Title
HEAT EXCHANGER
PREHEATED BY SOLAR
HOT WATER

DWG. No. BA-020

PAGE 105

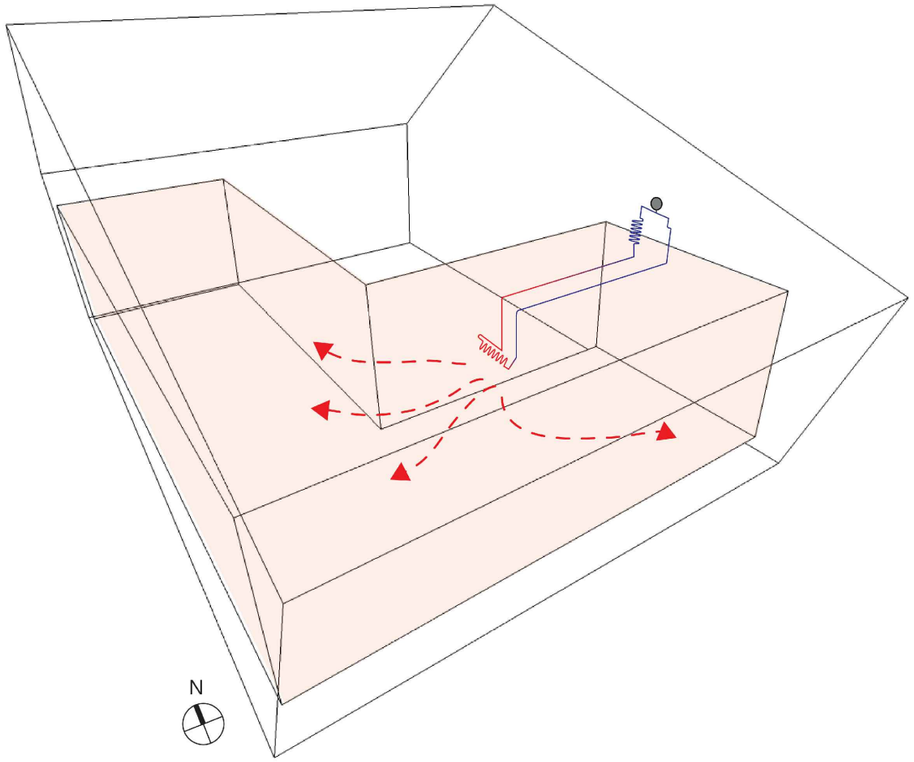

HEAT PUMP HEATING

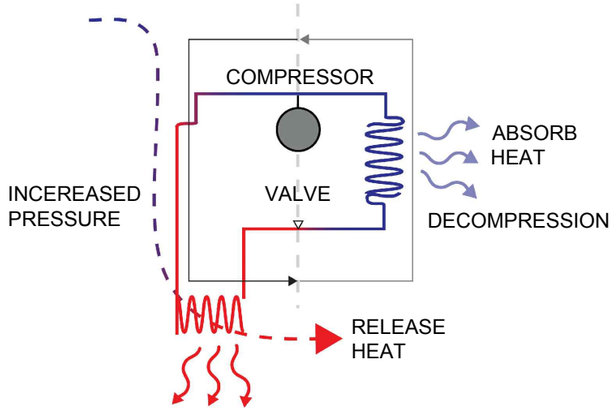

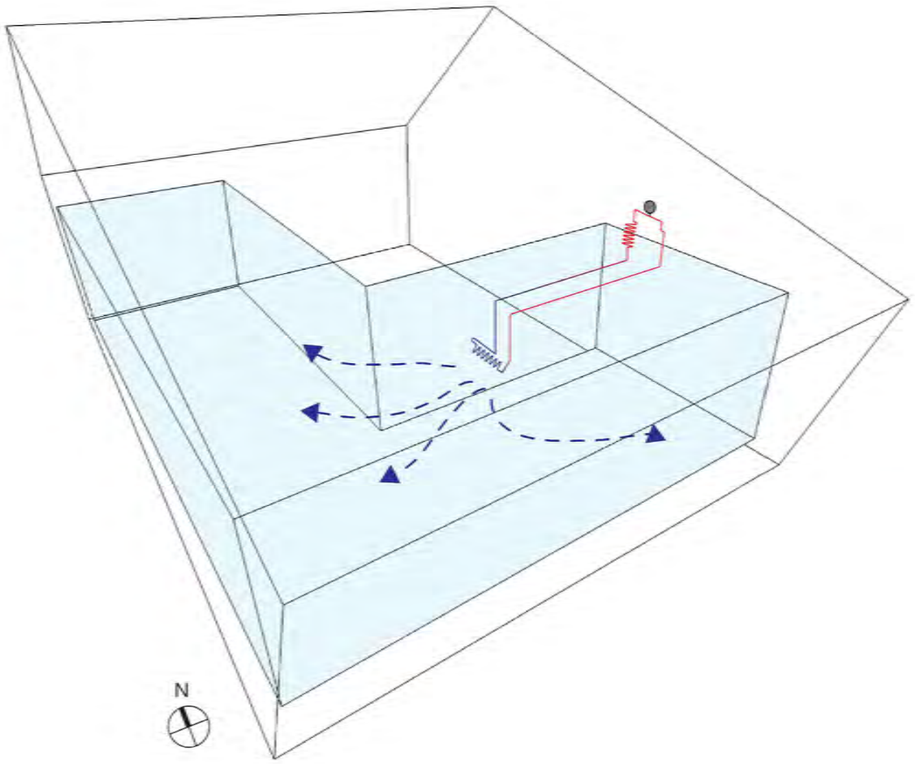

HEAT PUMP COOLING

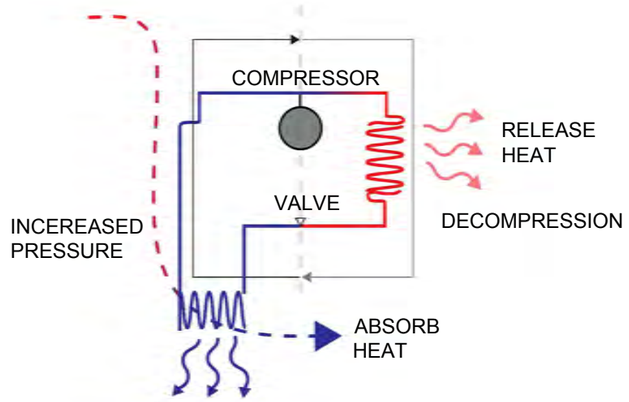

Solar Decathlon Europe

Project: ORCHID HOUSE

Institution: 國立交通大學 National Chiao Tung University

NCTU Architecture 國立交通大學建築研究所

Team Name: NCTU/UNICODE

Address: 1001 Ta-Hsueh Road
Hsinchu City 30010
Taiwan

Contact: www.sde.tw

Consultants:

Note:

Mark	Date	Description
DN	2013/04/01	SD Submission
DN	2013/07/01	DDc Submission
ST	2013/11/01	DD Submission
ST	2014/03/03	CD Submission
ST	2014/04/30	CD Submission
ST	2014/06/02	CD Submission

Drawn by	TW
Checked by	LY
Scale	-
Unit	-

DWG. Title: HEAT PUMP

DWG. No. BA-021

PAGE 106

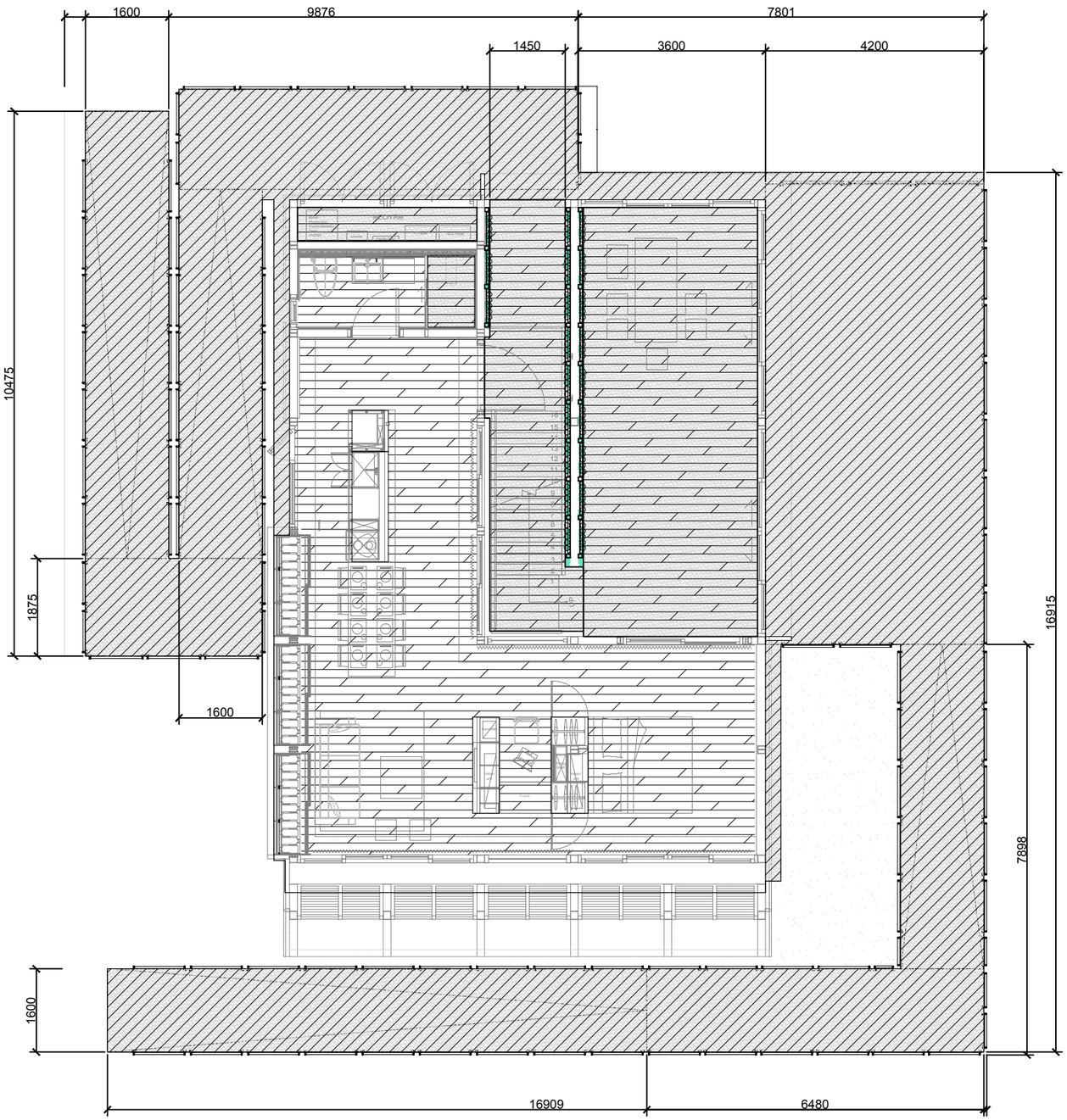

0 1 2 5 METER

SYMBOL & LEGEND

HATCH TYP	FLOOR TYPE	AREA	LOCATION
	Modern Tree Laminate Flooring	55.7m²	Interior Space
	Wood Plastic Composites	43.75m²	Terrace / Mech. RM. Shower RM.
	Wood Plastic Composites	127.7m²	Outdoor Deck

Solar Decathlon Europe

Project: ORCHID HOUSE

Institution: 國立交通大學 National Chiao Tung University

NCTU Architecture 國立交通大學建築研究所

Team Name: NCTU/UNICODE

Address: 1001 Ta-Hsueh Road Hsinchu City 30010 Taiwan

Contact: www.sde.tw

Consultants:

Note:

Mark	Date	Description
DN	2013/04/01	SD Submission
DN	2013/07/01	DDc Submission
ST	2013/11/01	DD Submission
ST	2014/03/03	CD Submission
ST	2014/04/30	CD Submission
ST	2014/06/02	CD Submission

Drawn by	TW
Checked by	-
Scale	1:100
Unit	mm

DWG. Title: GROUND LEVEL FLOOR

DWG. No. IN-001

PAGE 107

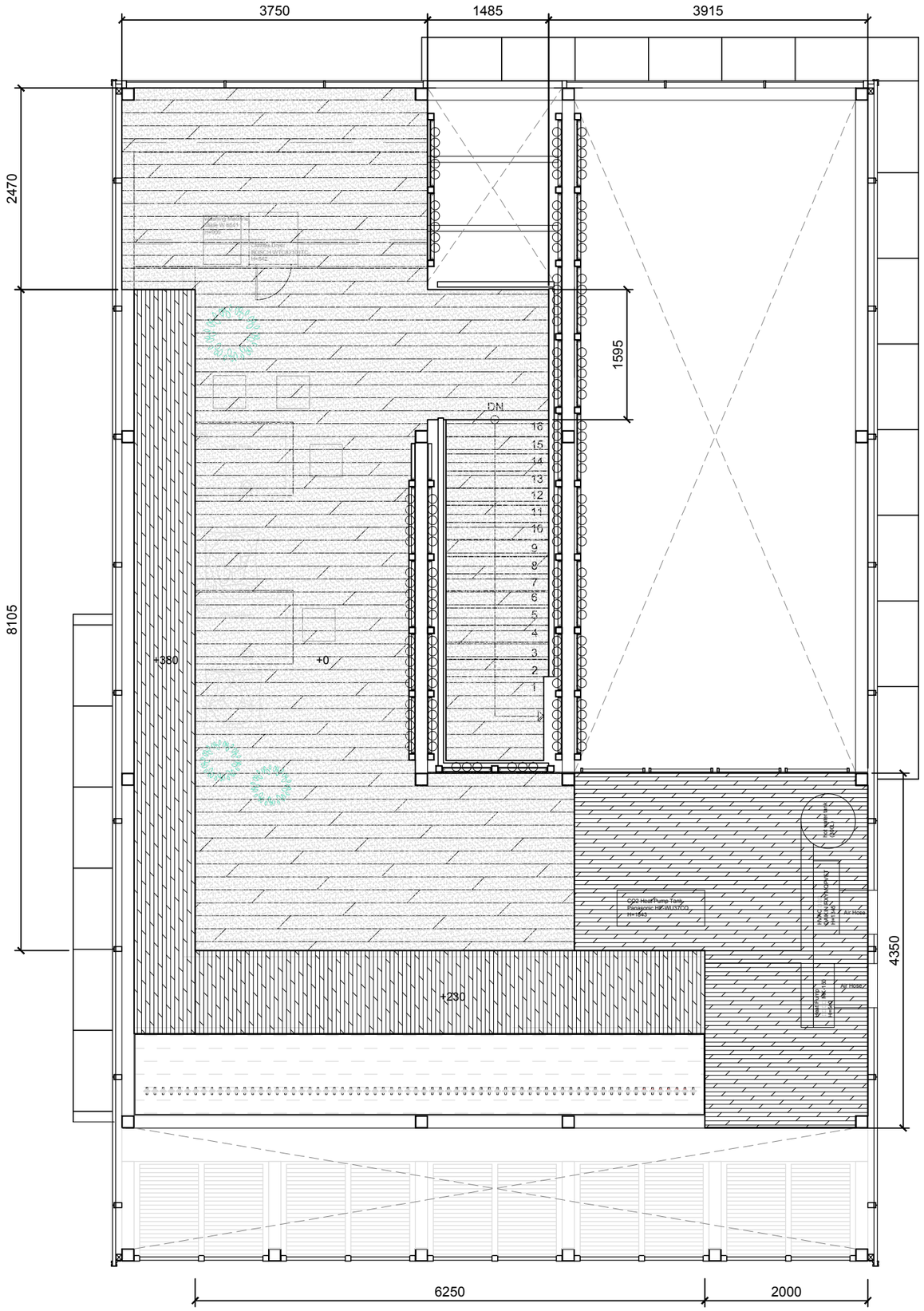

SYMBOL & LEGEND

HATCH TYP	FLOOR TYPE	AREA	LOCATION
	Wood Plastic Composites	42.84m²	
	Solid Wood	25.34m²	
	Stainless Steel	7m²	

0 1 2 5 METER

1 2

Solar Decathlon Europe

Project: ORCHID HOUSE

Institution: 國立交通大學 National Chiao Tung University

NCTU Architecture 國立交通大學建築研究所

Team Name: NCTU/UNICODE

Address: 1001 Ta-Hsueh Road Hsinchu City 30010 Taiwan

Contact: www.sde.tw

Consultants:

Note:

Mark	Date	Description
DN	2013/04/01	SD Submission
DN	2013/07/01	DDc Submission
ST	2013/11/01	DD Submission
ST	2014/03/03	CD Submission
ST	2014/04/30	CD Submission
ST	2014/06/02	CD Submission

Drawn by	TW
Checked by	-
Scale	1:60
Unit	mm

DWG. Title: MEZZANINE LEVEL FLOOR

DWG. No. IN-002

PAGE 108

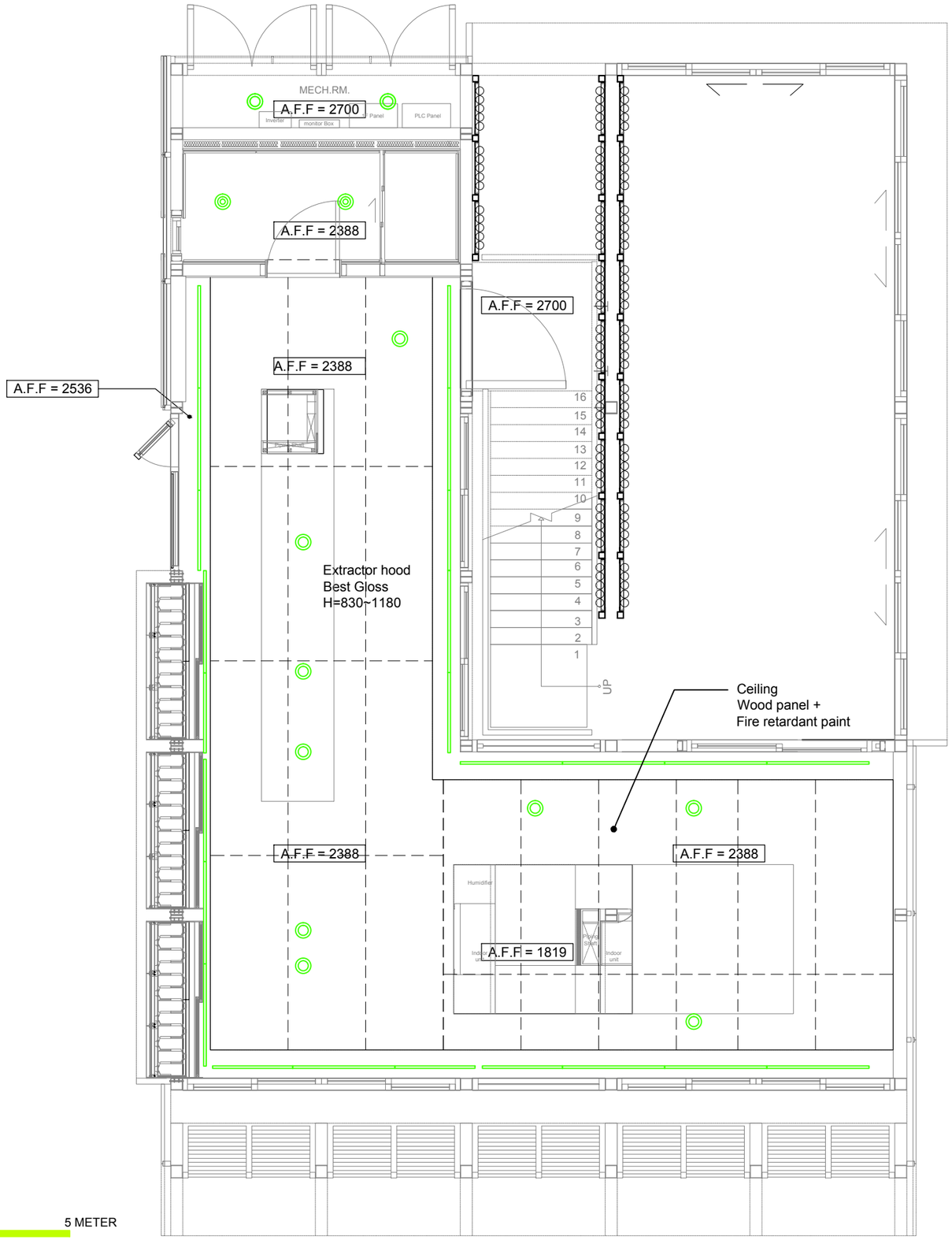

0 1 2 5 METER

SYMBOL & LEGEND

HATCH TYP	TYPE
	DOWN LIGHT
	WATERPROOFED DOWN LIGHT
	T8 LED

Solar Decathlon Europe

Project: ORCHID HOUSE

Institution: 國立交通大學 National Chiao Tung University

NCTU Architecture 國立交通大學建築研究所

Team Name: NCTU/UNICODE

Address: 1001 Ta-Hsueh Road
Hsinchu City 30010
Taiwan

Contact: www.sde.tw

Consultants:

Note:

N

Mark	Date	Description
DN	2013/04/01	SD Submission
DN	2013/07/01	DDc Submission
ST	2013/11/01	DD Submission
ST	2014/03/03	CD Submission
ST	2014/04/30	CD Submission
ST	2014/06/02	CD Submission

Drawn by	TW
Checked by	DN
Scale	1:60
Unit	mm

DWG. Title

REFLECTED CEILING

DWG. No. IN-101

PAGE 109

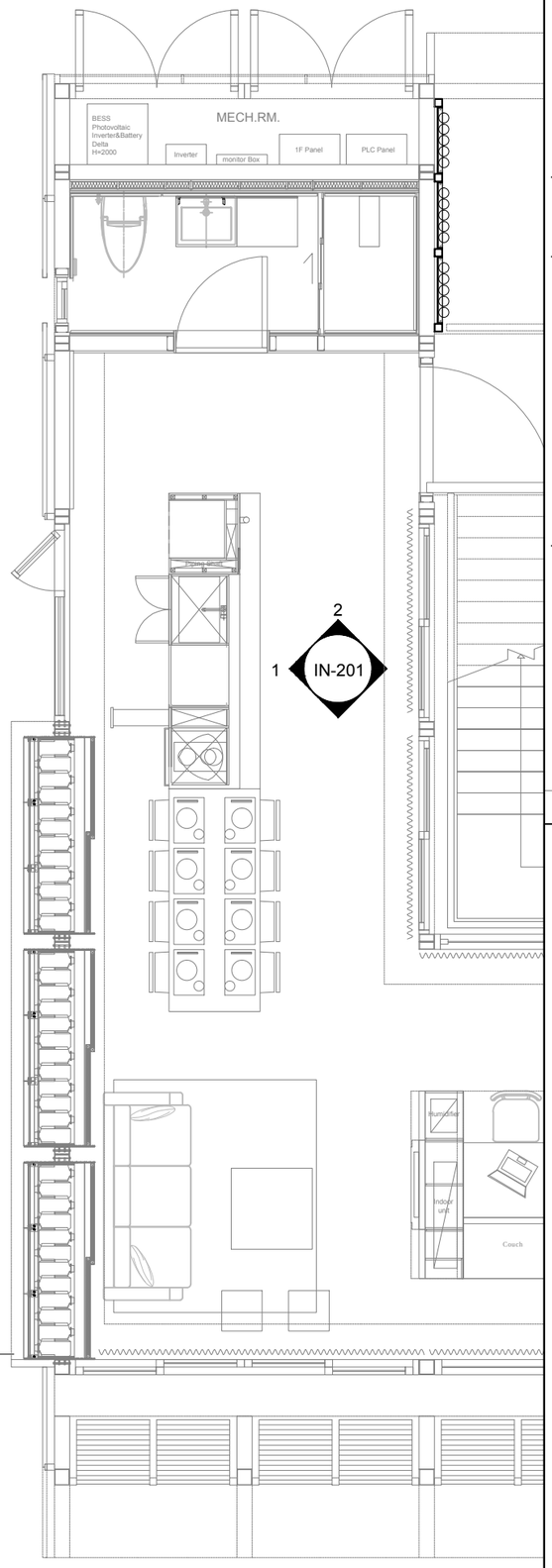

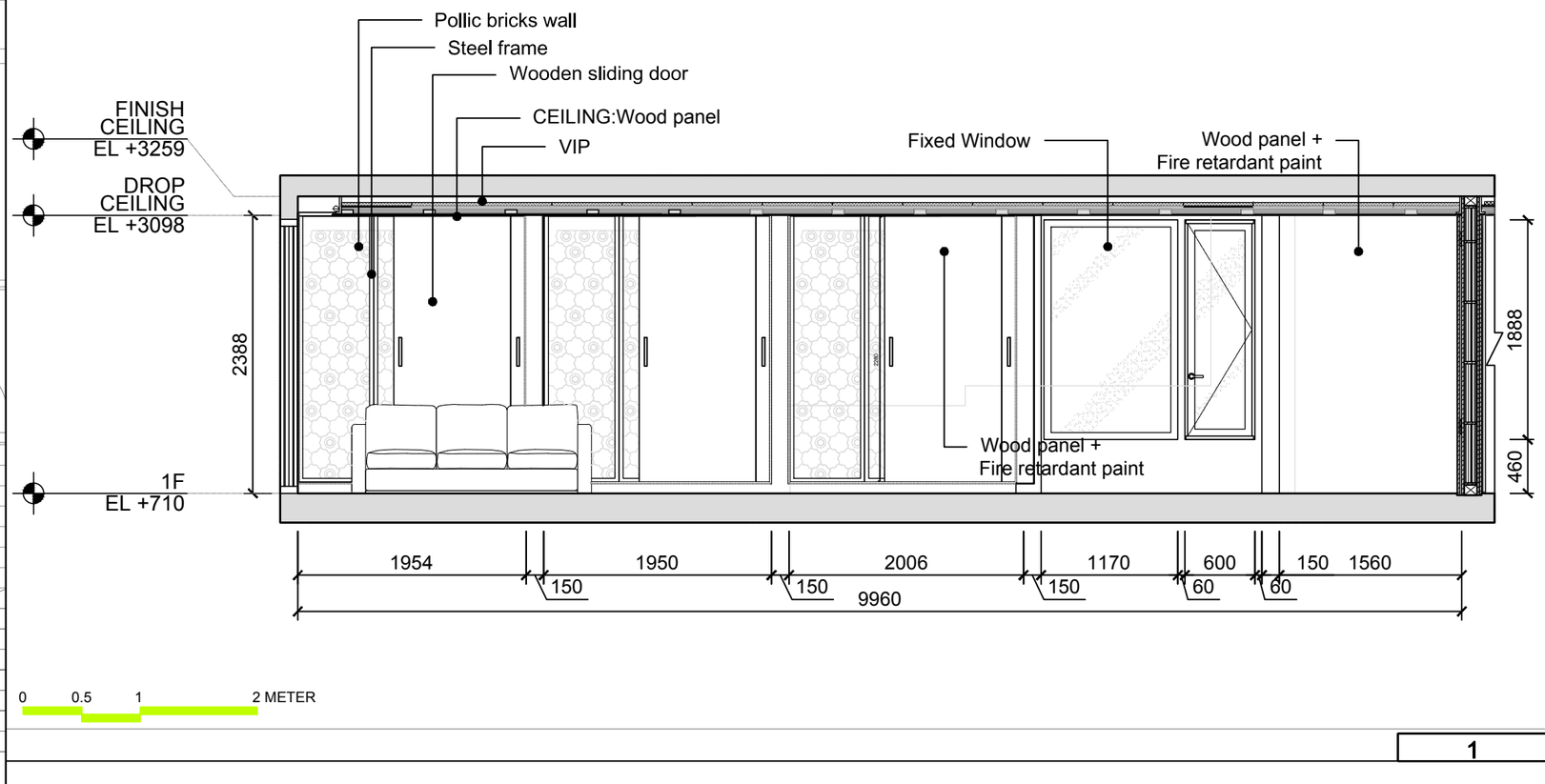

1

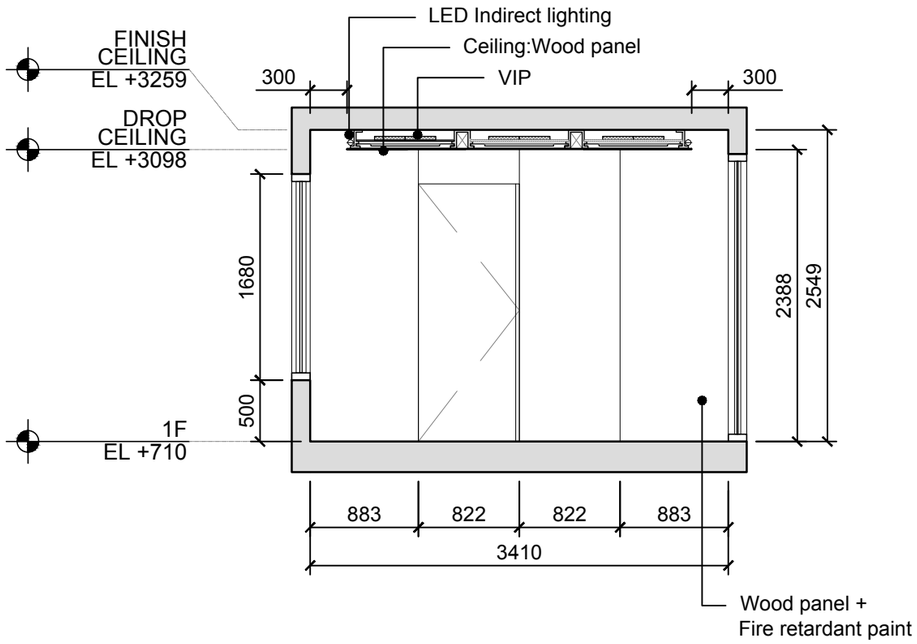

2

0 1 2 5 METER

0 0.5 1 2 METER

Solar Decathlon Europe

Project: ORCHID HOUSE

Institution: 國立交通大學 National Chiao Tung University

NCTU Architecture 國立交通大學建築研究所

Team Name: NCTU/UNICODE

Address: 1001 Ta-Hsueh Road
Hsinchu City 30010
Taiwan

Contact: www.sde.tw

Consultants:

Note:

Mark	Date	Description
DN	2013/04/01	SD Submission
DN	2013/07/01	DDc Submission
ST	2013/11/01	DD Submission
ST	2014/03/03	CD Submission
ST	2014/04/30	CD Submission
ST	2014/06/02	CD Submission

Drawn by	TW
Checked by	DN
Scale	1:50
Unit	mm

DWG. Title: INTERIOR ELEVATIONS 1

DWG. No.: IN-201

PAGE: 110

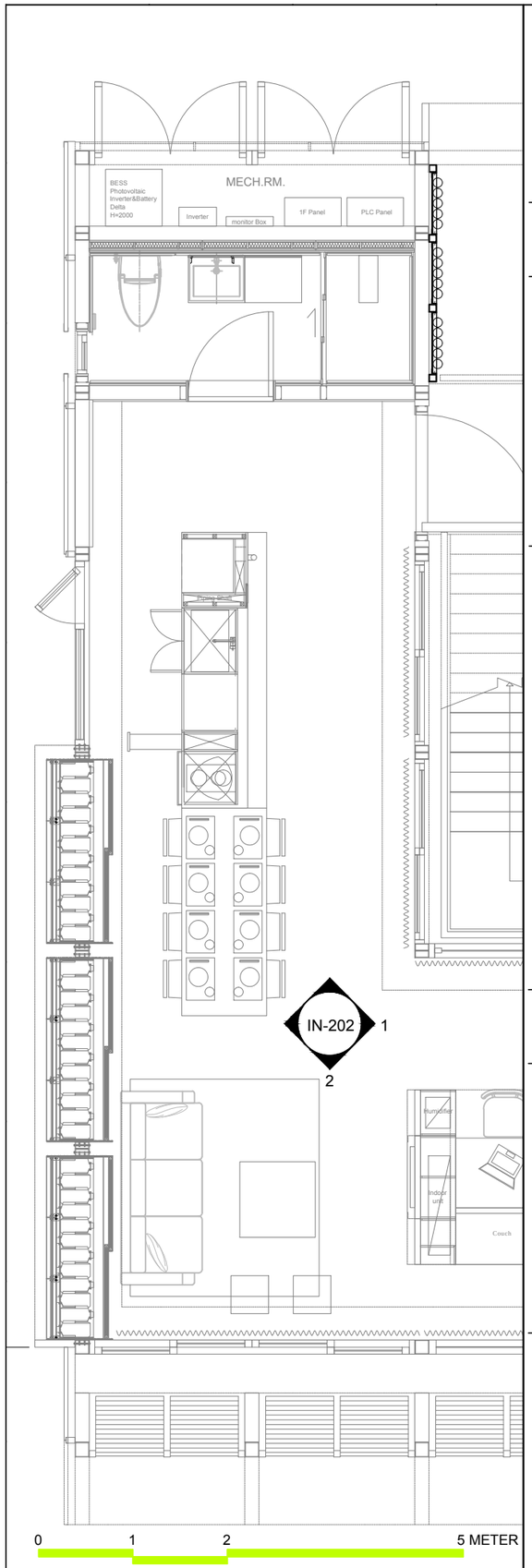

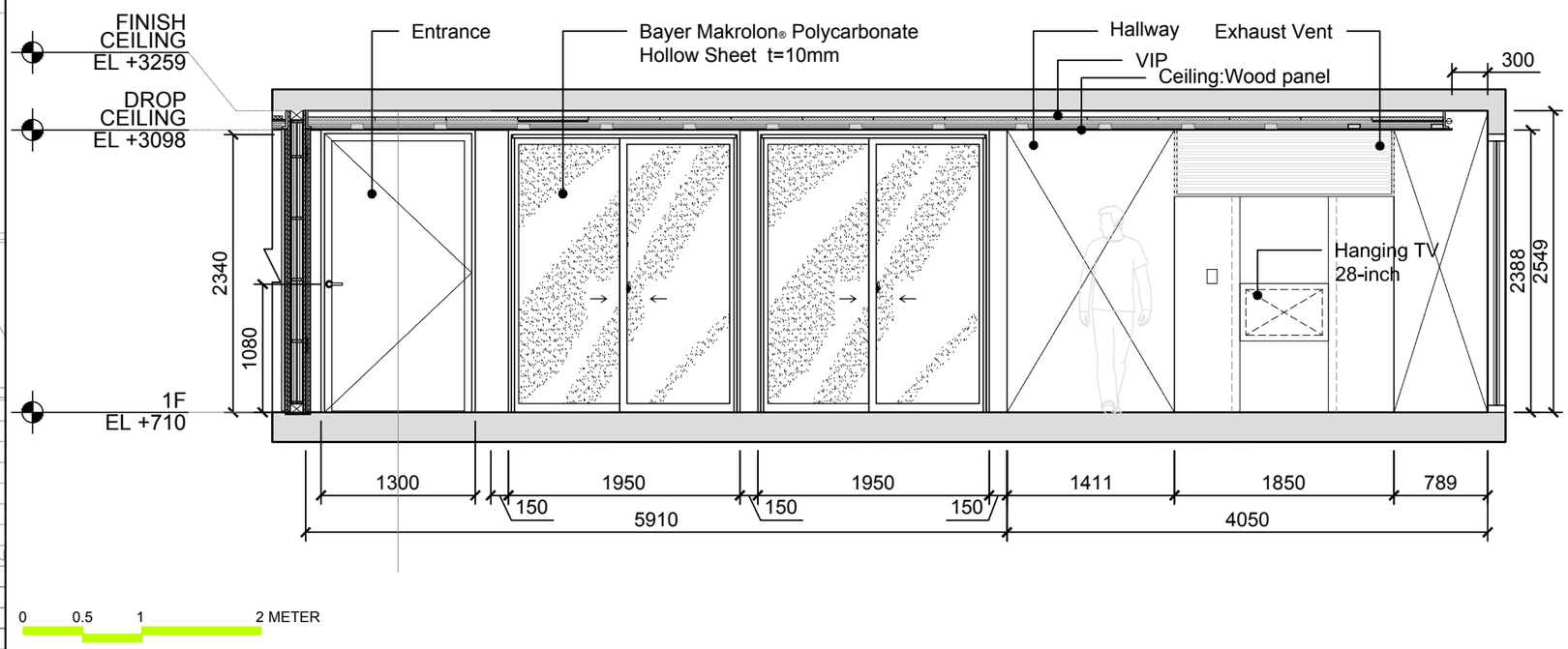

1

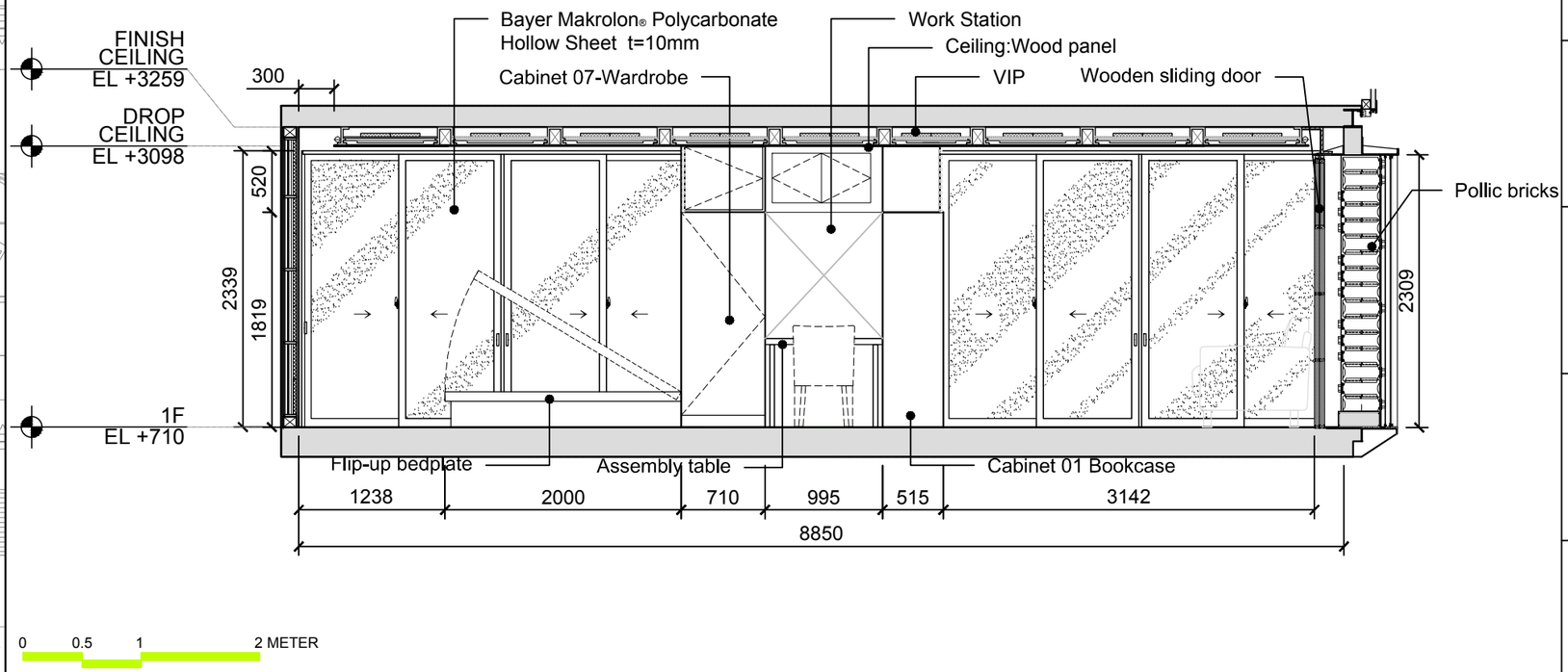

2

Solar Decathlon Europe

Project: ORCHID HOUSE

Institution: 國立交通大學 National Chiao Tung University

NCTU Architecture 國立交通大學建築研究所

Team Name: NCTU/UNICODE

Address: 1001 Ta-Hsueh Road
Hsinchu City 30010
Taiwan

Contact: www.sde.tw

Consultants:

Note:

Mark	Date	Description
DN	2013/04/01	SD Submission
DN	2013/07/01	DDc Submission
ST	2013/11/01	DD Submission
ST	2014/03/03	CD Submission
ST	2014/04/30	CD Submission
ST	2014/06/02	CD Submission

Drawn by	TW
Checked by	DN
Scale	1:50
Unit	mm

DWG. Title: INTERIOR ELEVATIONS 2

DWG. No.: IN-202

PAGE: 111

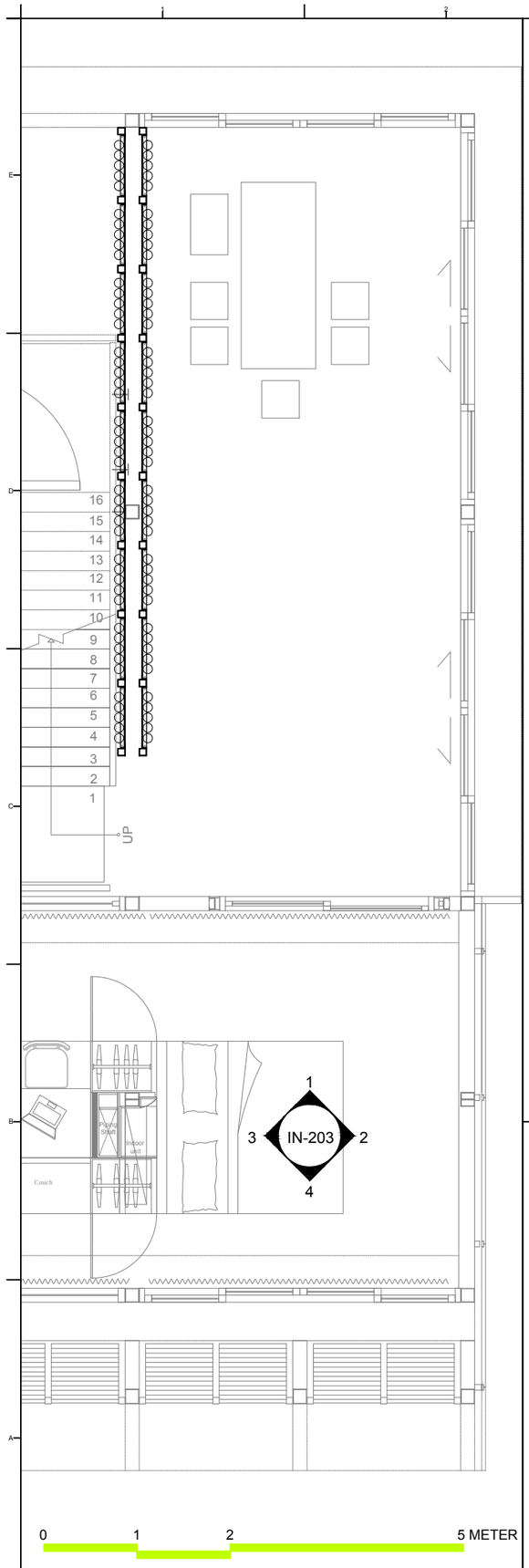

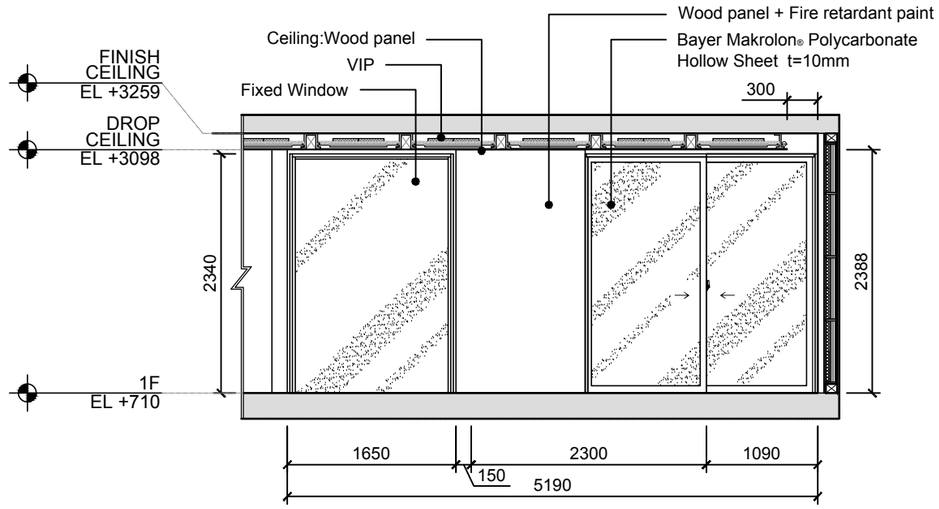

1

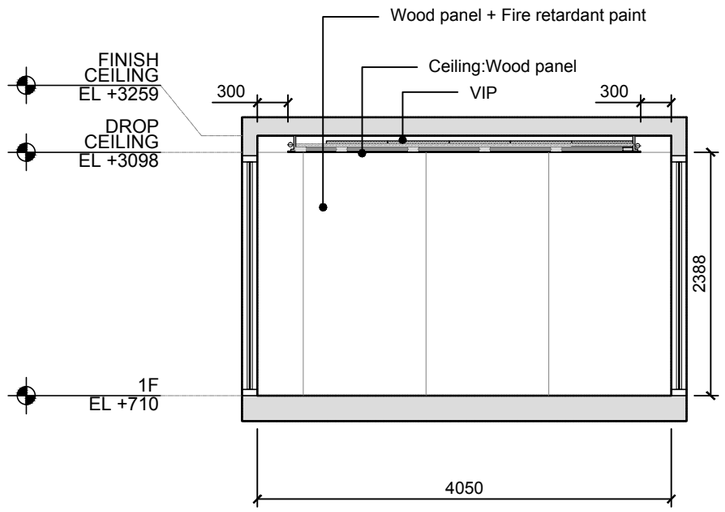

2

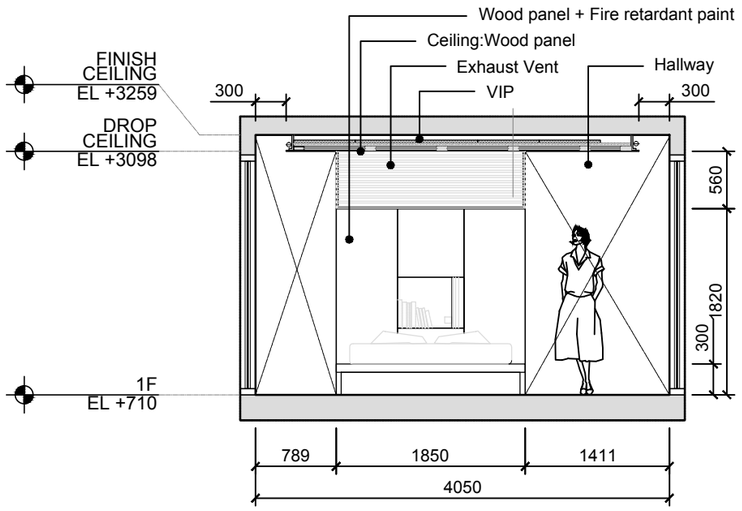

3

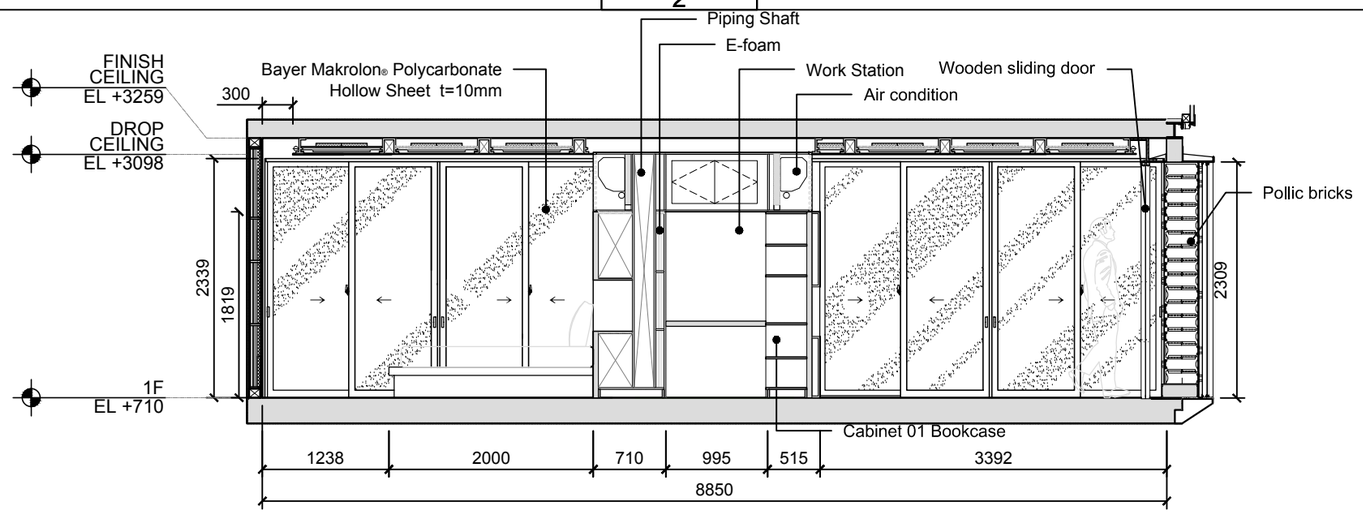

4

Solar Decathlon Europe

Project: ORCHID HOUSE

Institution: 國立交通大學 National Chiao Tung University

NCTU Architecture 國立交通大學建築研究所

Team Name: NCTU/UNICODE

Address: 1001 Ta-Hsueh Road Hsinchu City 30010 Taiwan

Contact: www.sde.tw

Consultants:

Note:

Mark	Date	Description
DN	2013/04/01	SD Submission
DN	2013/07/01	DDc Submission
ST	2013/11/01	DD Submission
ST	2014/03/03	CD Submission
ST	2014/04/30	CD Submission
ST	2014/06/02	CD Submission

Drawn by	TW
Checked by	DN
Scale	1:60
Unit	mm

DWG. Title: INTERIOR ELEVATIONS 3

DWG. No.: IN-203

PAGE: 112

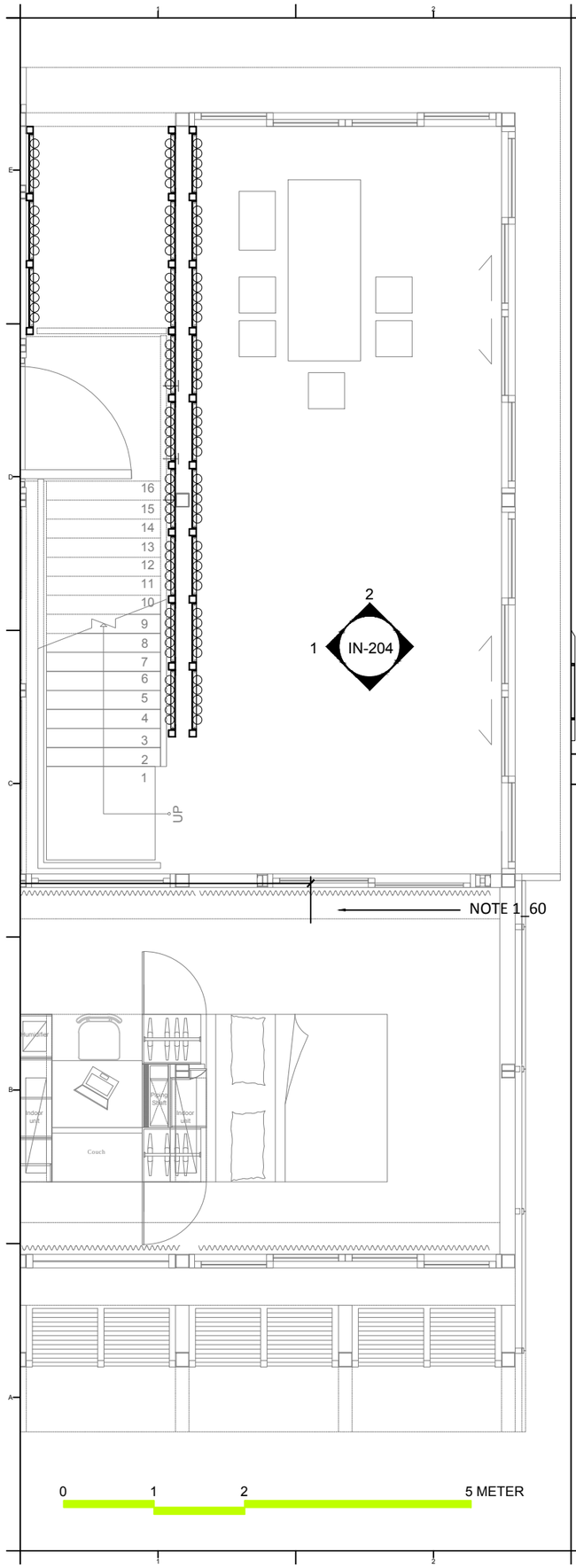

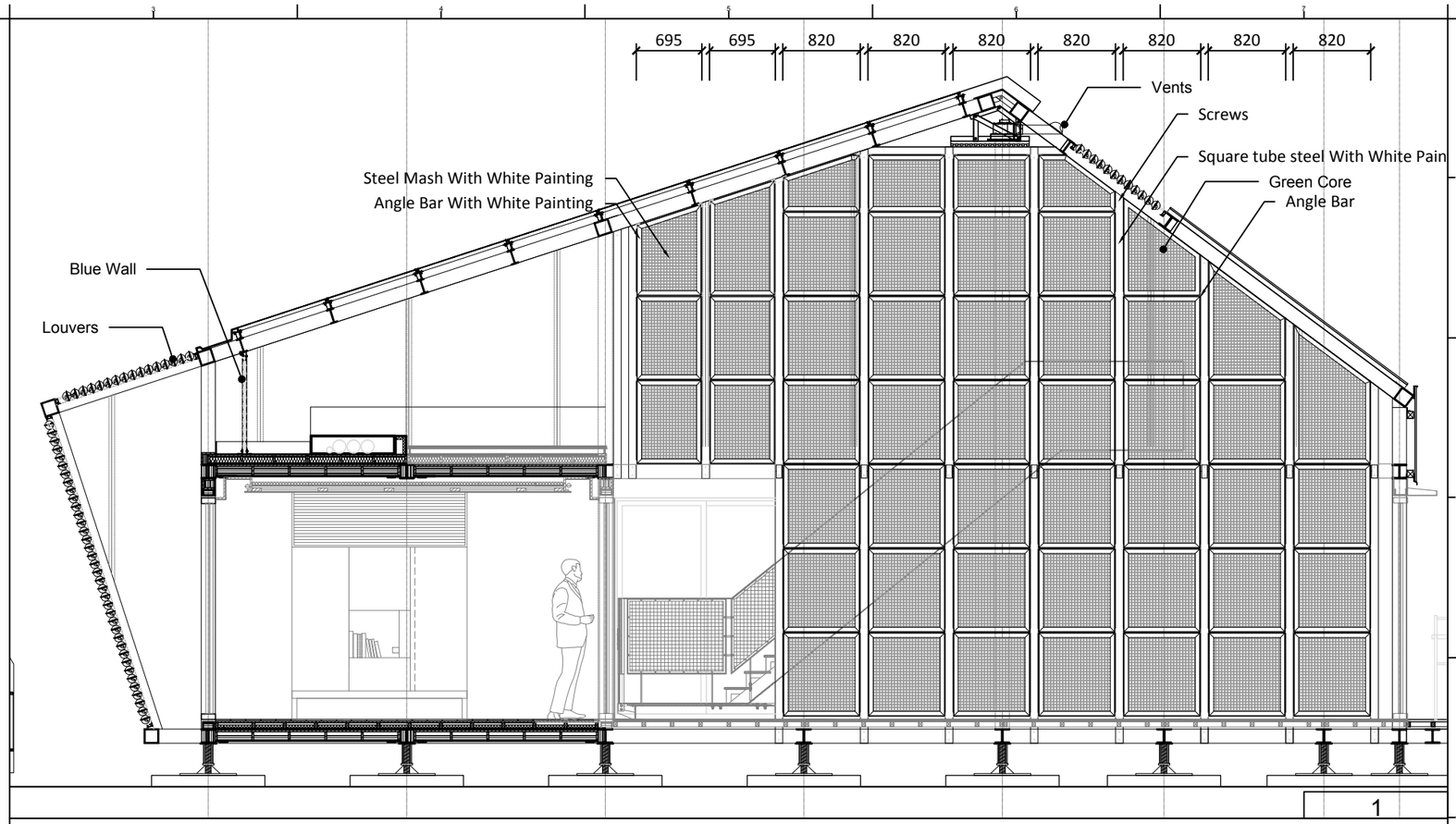

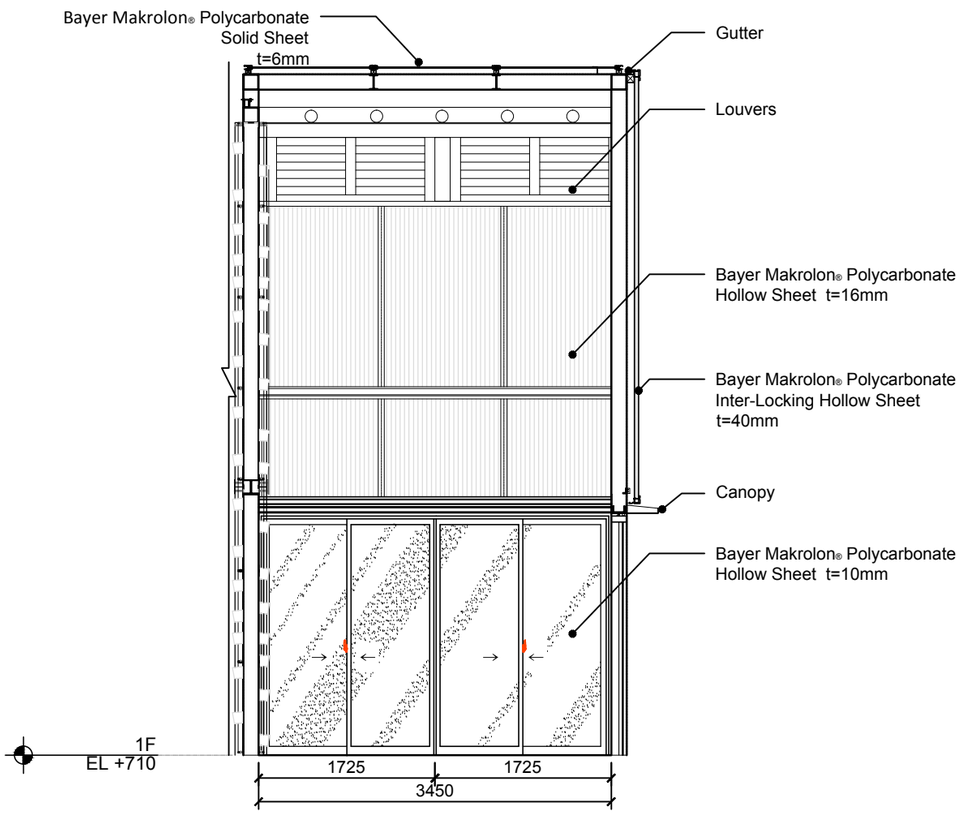

Solar Decathlon Europe

Project: ORCHID HOUSE

Institution: 國立交通大學 National Chiao Tung University

NCTU Architecture 國立交通大學建築研究所

Team Name: NCTU/UNICODE

Address: 1001 Ta-Hsueh Road
Hsinchu City 30010
Taiwan

Contact: www.sde.tw

Consultants:

Note:

N

Mark	Date	Description
DN	2013/04/01	SD Submission
DN	2013/07/01	DDc Submission
ST	2013/11/01	DD Submission
ST	2014/03/03	CD Submission
ST	2014/04/30	CD Submission
ST	2014/06/02	CD Submission

Drawn by	TW
Checked by	DN
Scale	1:60
Unit	mm

DWG. Title: INTERIOR ELEVATIONS 3

DWG. No.: IN-204

PAGE: 113

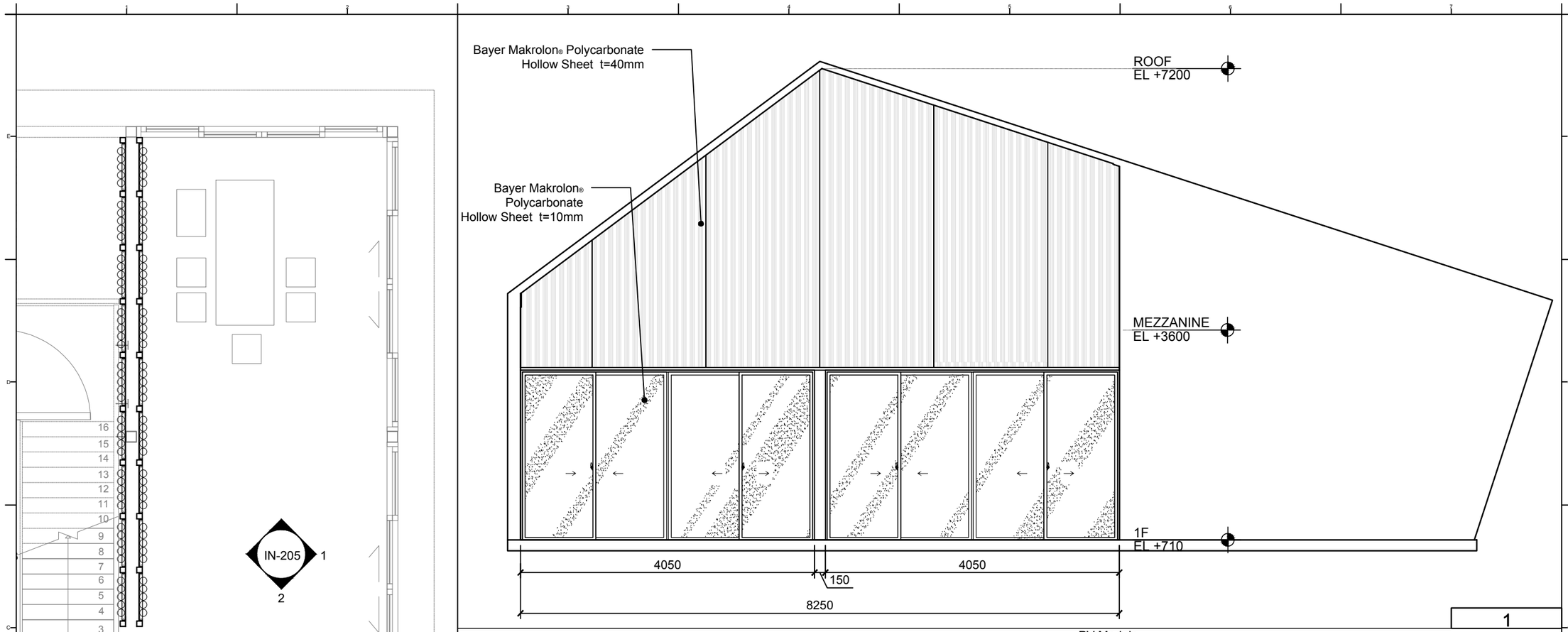

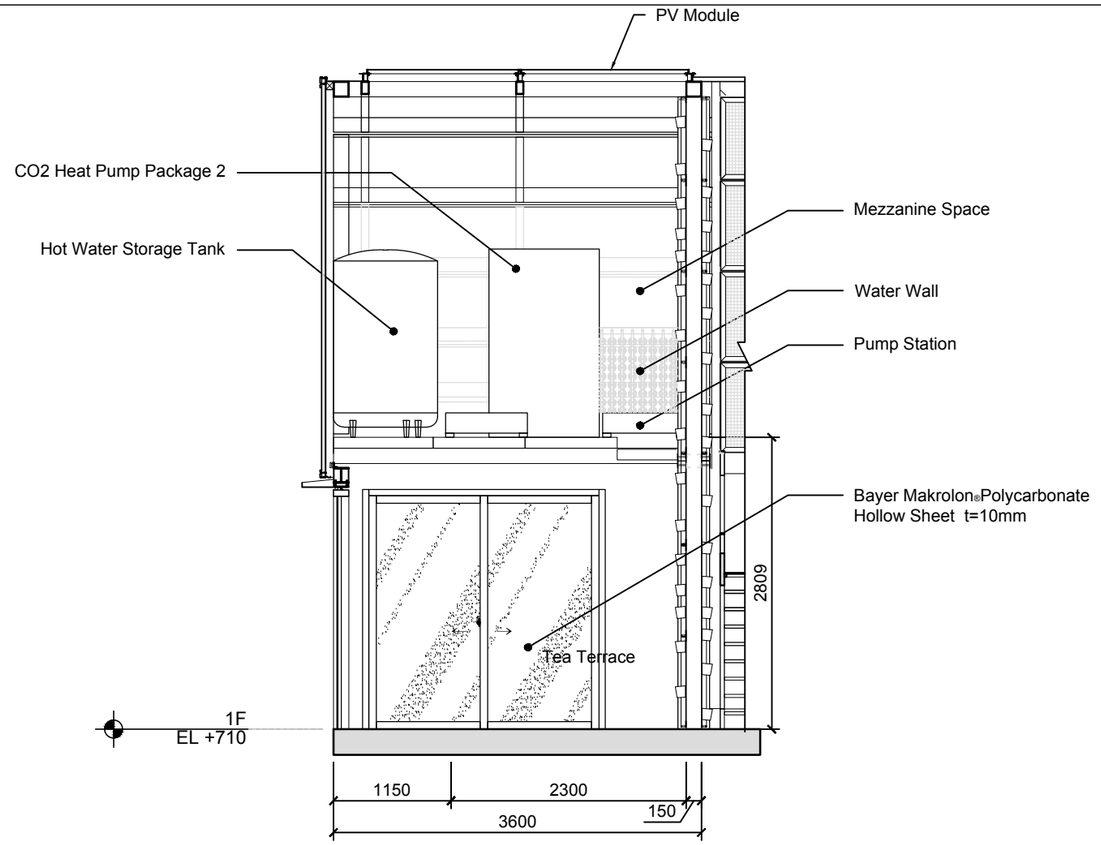

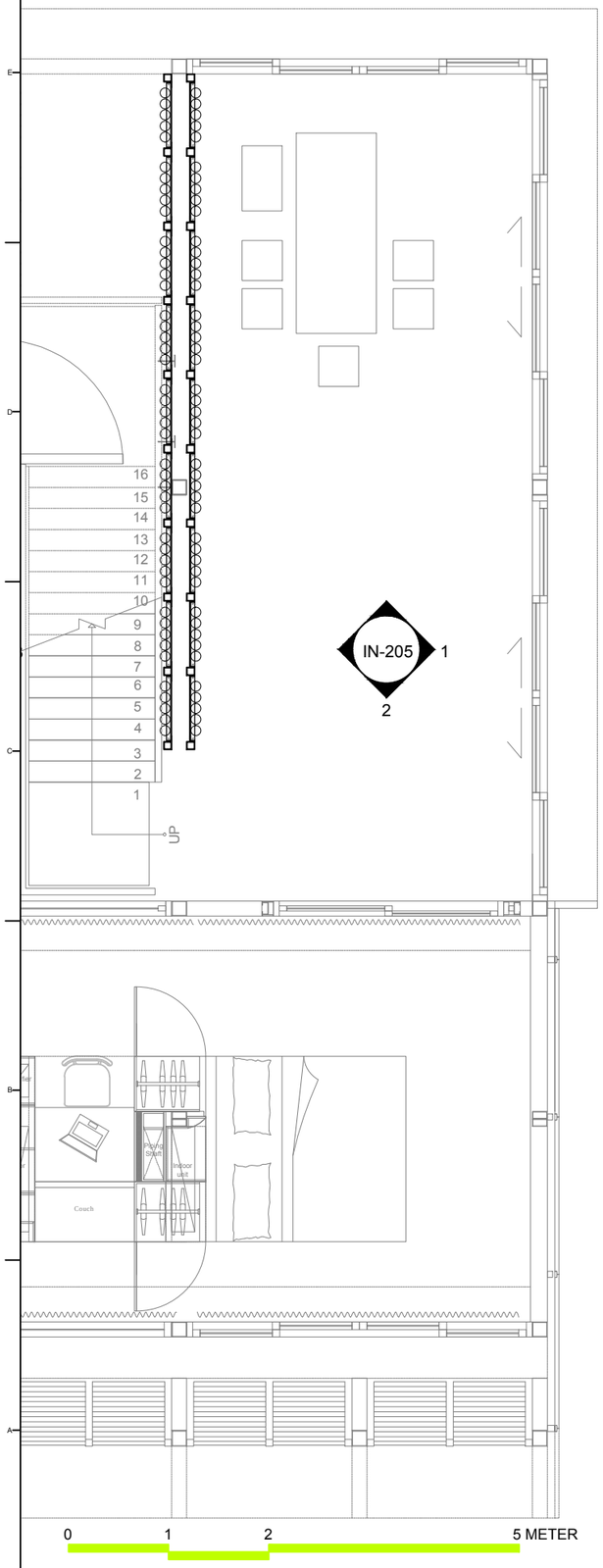

Solar Decathlon Europe

Project: ORCHID HOUSE

Institution: 國立交通大學 National Chiao Tung University

NCTU Architecture 國立交通大學建築研究所

Team Name: NCTU/UNICODE

Address: 1001 Ta-Hsueh Road
Hsinchu City 30010
Taiwan

Contact: www.sde.tw

Consultants:

Note:

Mark	Date	Description
DN	2013/04/01	SD Submission
DN	2013/07/01	DDc Submission
ST	2013/11/01	DD Submission
ST	2014/03/03	CD Submission
ST	2014/04/30	CD Submission
ST	2014/06/02	CD Submission

Drawn by	TW
Checked by	DN
Scale	1:60
Unit	mm

DWG. Title: INTERIOR ELEVATIONS 5

DWG. No.: IN-205

PAGE: 114

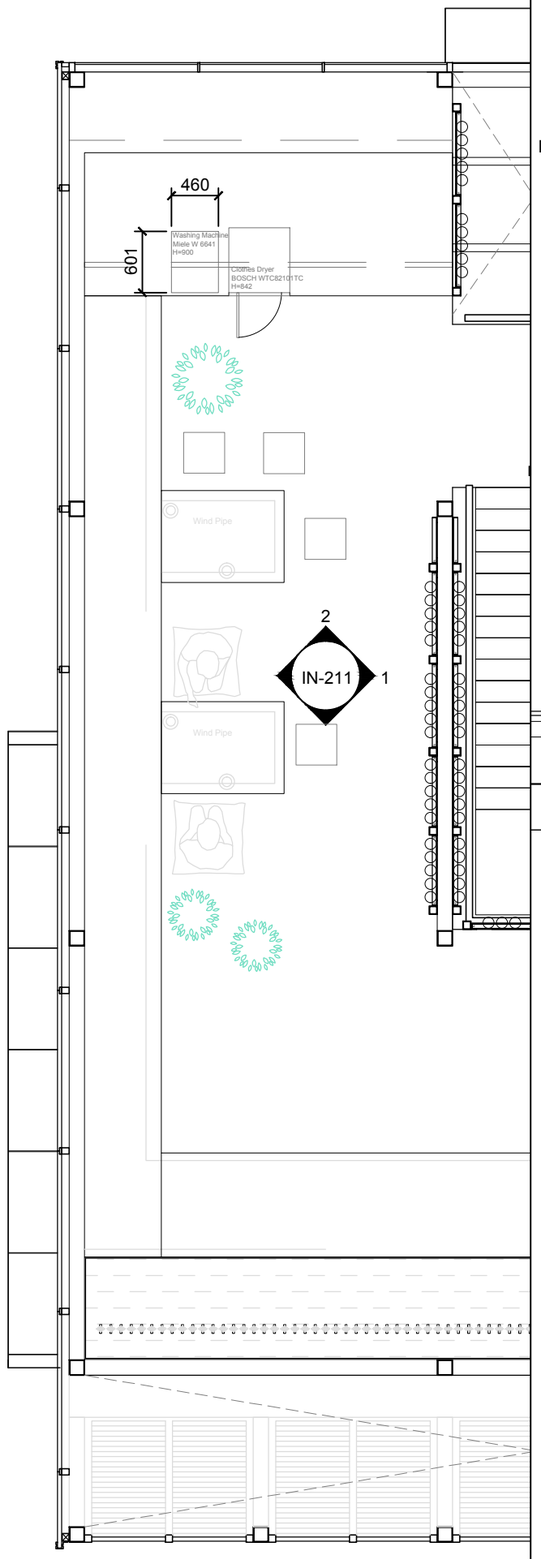

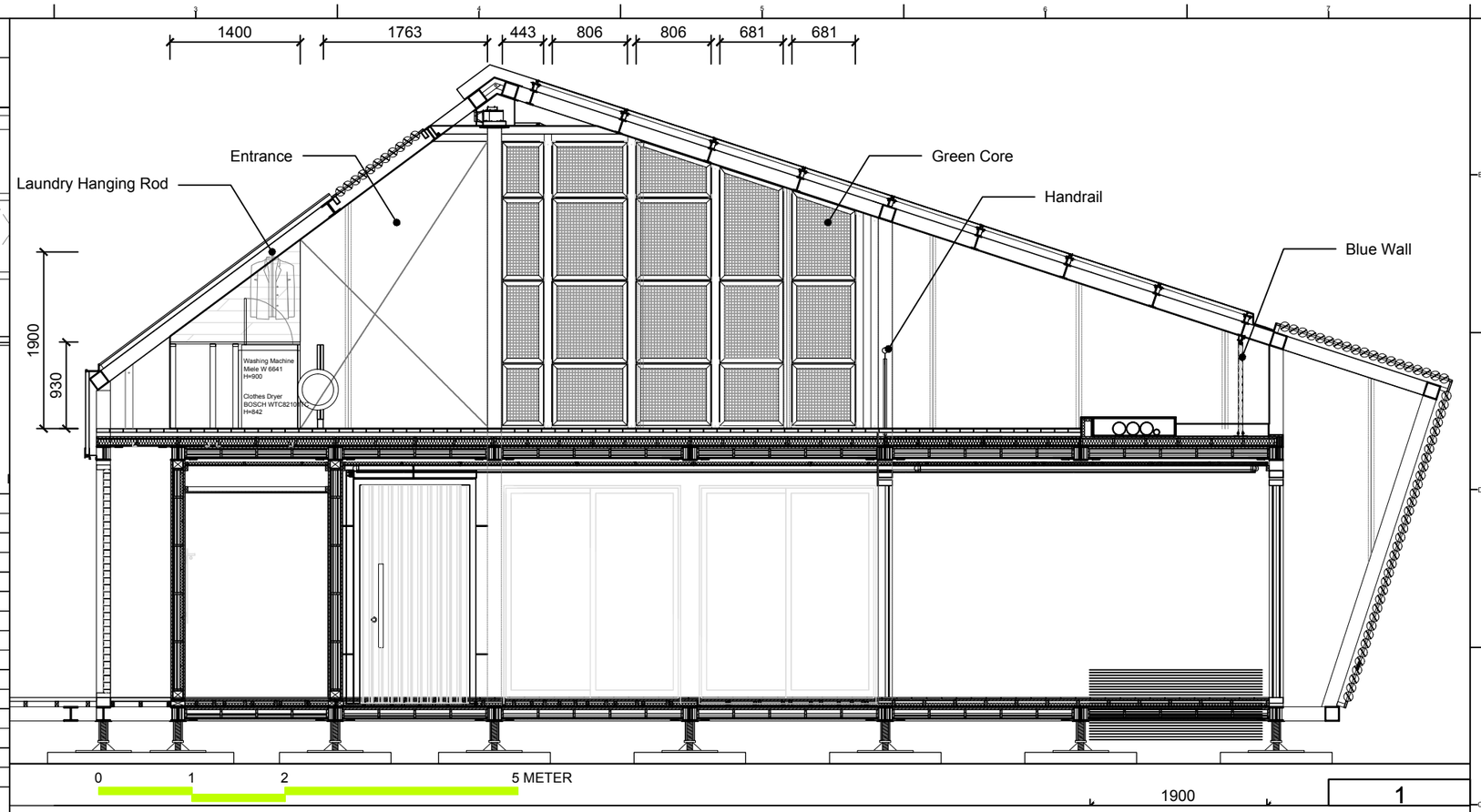

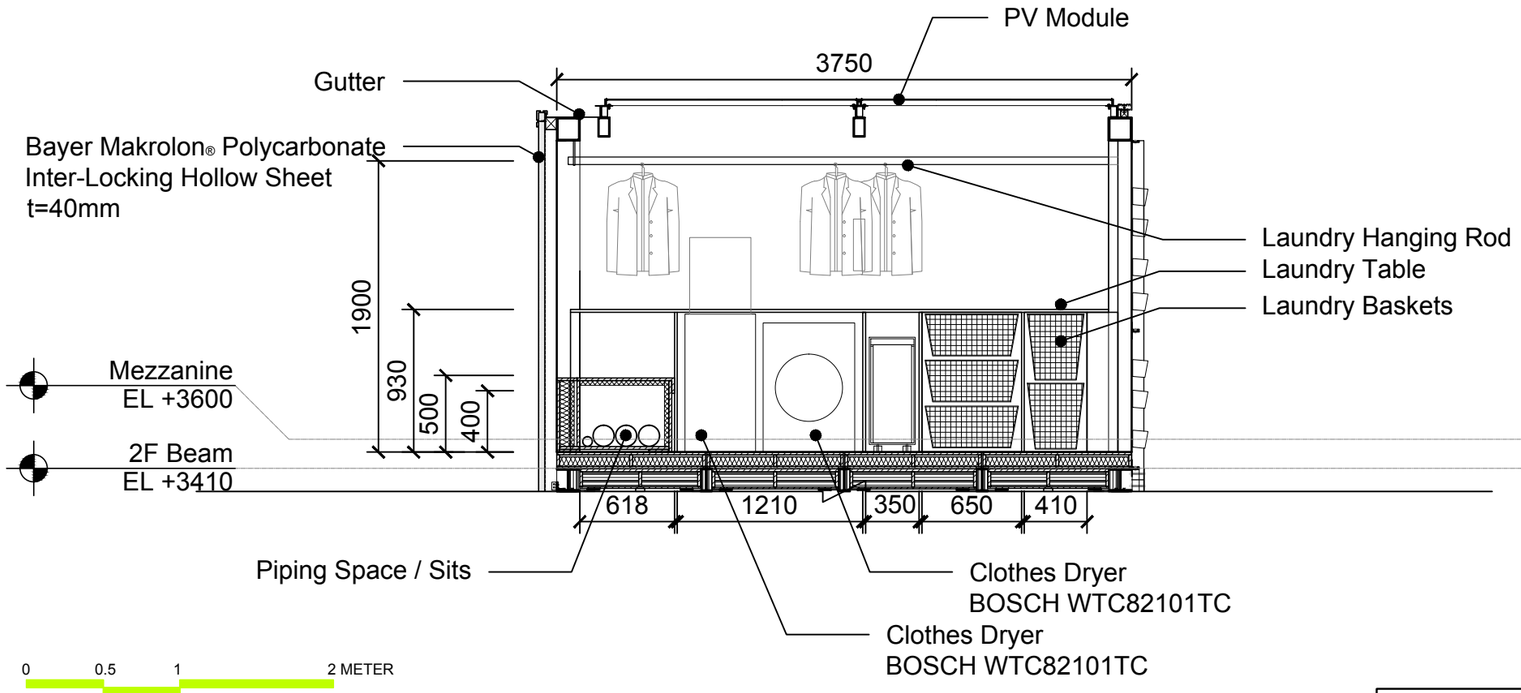

Solar Decathlon Europe

Project: ORCHID HOUSE

Institution: 國立交通大學 National Chiao Tung University

NCTU Architecture 國立交通大學建築研究所

Team Name: NCTU/UNICODE

Address: 1001 Ta-Hsueh Road
Hsinchu City 30010
Taiwan

Contact: www.sde.tw

Consultants:

Note:

Mark	Date	Description
DN	2013/04/01	SD Submission
DN	2013/07/01	DDc Submission
ST	2013/11/01	DD Submission
ST	2014/03/03	CD Submission
ST	2014/04/30	CD Submission
ST	2014/06/02	CD Submission

Drawn by	TW
Checked by	-
Scale	1:60
Unit	mm

DWG. Title: INTERIOR ELEVATIONS 6

DWG. No.: IN-211

PAGE: 115

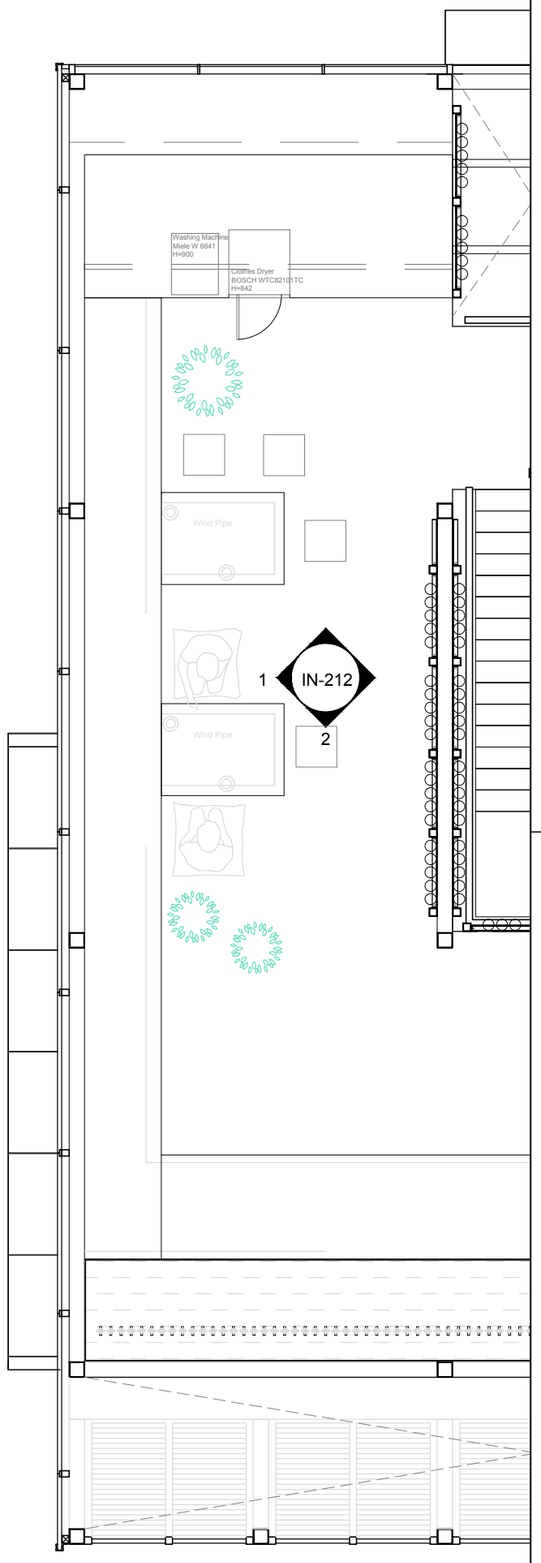

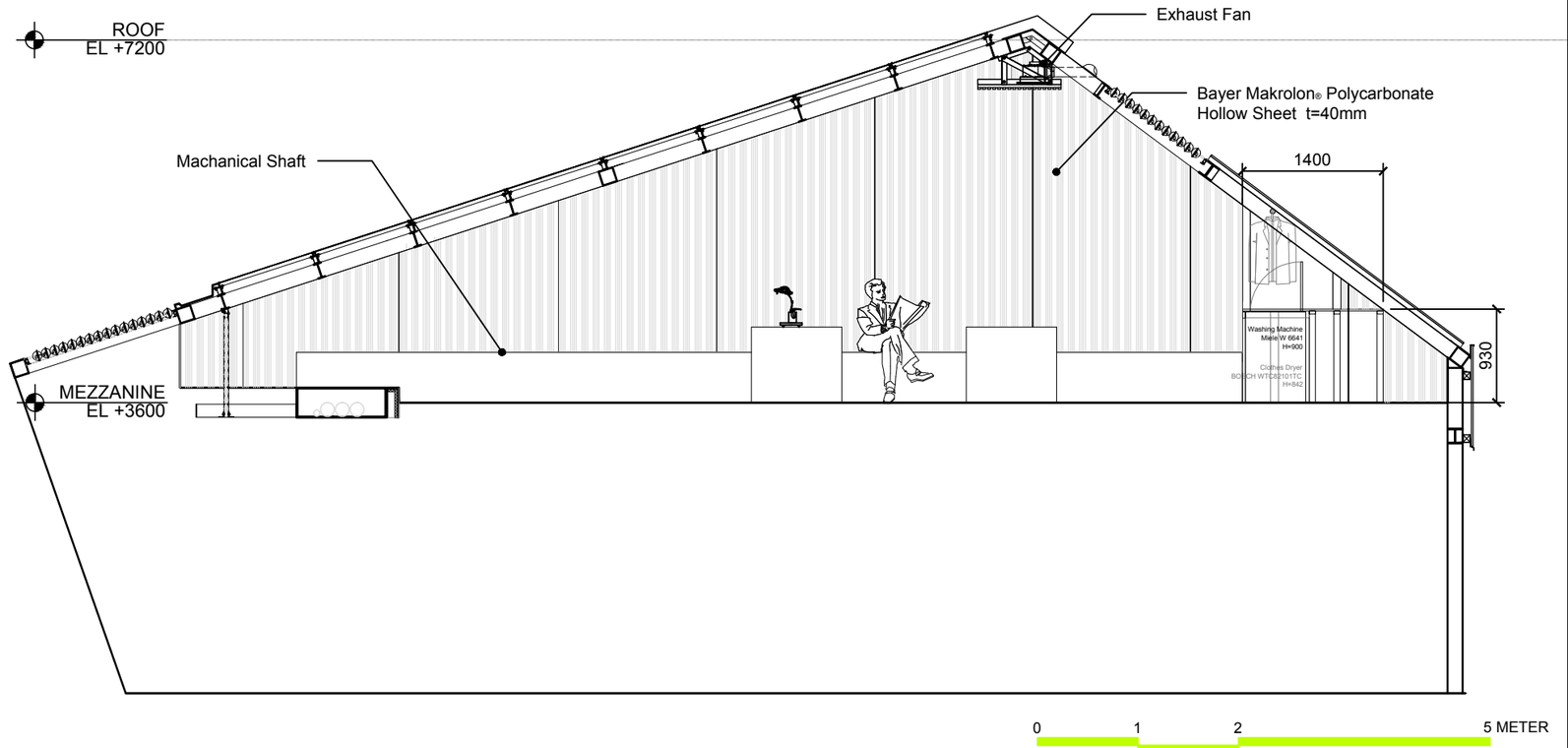

1

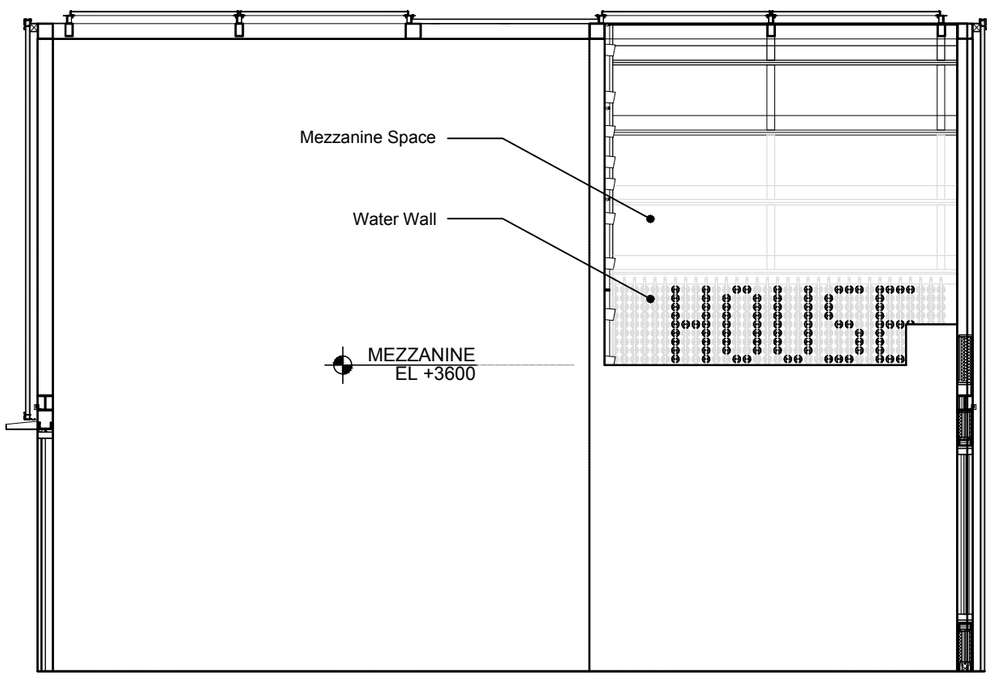

2

Solar Decathlon Europe

Project: ORCHID HOUSE

Institution: 國立交通大學 National Chiao Tung University

NCTU Architecture 國立交通大學建築研究所

Team Name: NCTU/UNICODE

Address: 1001 Ta-Hsueh Road
Hsinchu City 30010
Taiwan

Contact: www.sde.tw

Consultants:

Note:

Mark	Date	Description
DN	2013/04/01	SD Submission
DN	2013/07/01	DDc Submission
ST	2013/11/01	DD Submission
ST	2014/03/03	CD Submission
ST	2014/04/30	CD Submission
ST	2014/06/02	CD Submission

Drawn by	TW
Checked by	DN
Scale	1:60
Unit	mm

DWG. Title: INTERIOR ELEVATIONS 7

DWG. No. IN-212

PAGE 116

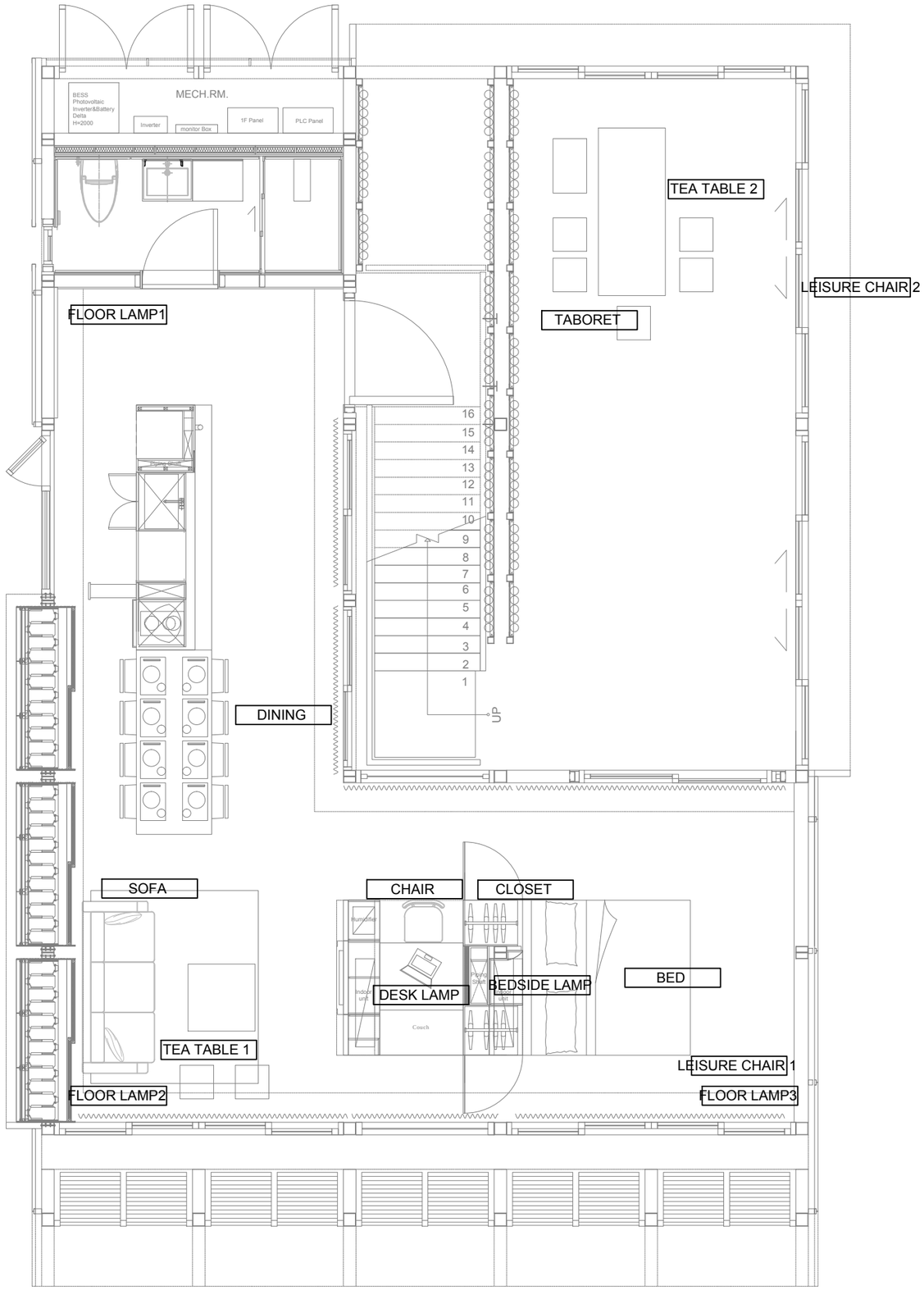

0 1 2 5 METER

FURNITURE LIST

TYPE	IMAGE	SIZE(L*W*H) mm
DINING CHAIR		
SOFA	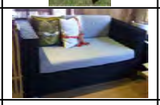	1900*860*700 seat height:
TEA TABLE 1		
BED		1520*1880*210
WORK CHAIR		
TEA TABLE 2		
TABORET		400*400*400
LEISURE CHAIR 1		
LEISURE CHAIR 2		
UMBRELLA BUCKET		
CLOSET	SEE DWG.IN-701	
FLOOR LAMP 1		360*360*1400
FLOOR LAMP 2		360*360*1400
FLOOR LAMP 3		260*250*1450
DESK LAMP		400*160*540
BEDSIDE LAMP		250*250*525

Solar Decathlon Europe

Project: ORCHID HOUSE

Institution: 國立交通大學 National Chiao Tung University

NCTU Architecture 國立交通大學建築研究所

Team Name: NCTU/UNICODE

Address: 1001 Ta-Hsueh Road
Hsinchu City 30010
Taiwan

Contact: www.sde.tw

Consultants:

Note:

N

Mark	Date	Description
DN	2013/04/01	SD Submission
DN	2013/07/01	DDc Submission
ST	2013/11/01	DD Submission
ST	2014/03/03	CD Submission
ST	2014/04/30	CD Submission
ST	2014/06/02	CD Submission

Drawn by	TW
Checked by	DN
Scale	1:60
Unit	mm

DWG. Title

GROUND FLOOR FURNISHINGS

DWG. No. IN-301

PAGE 117

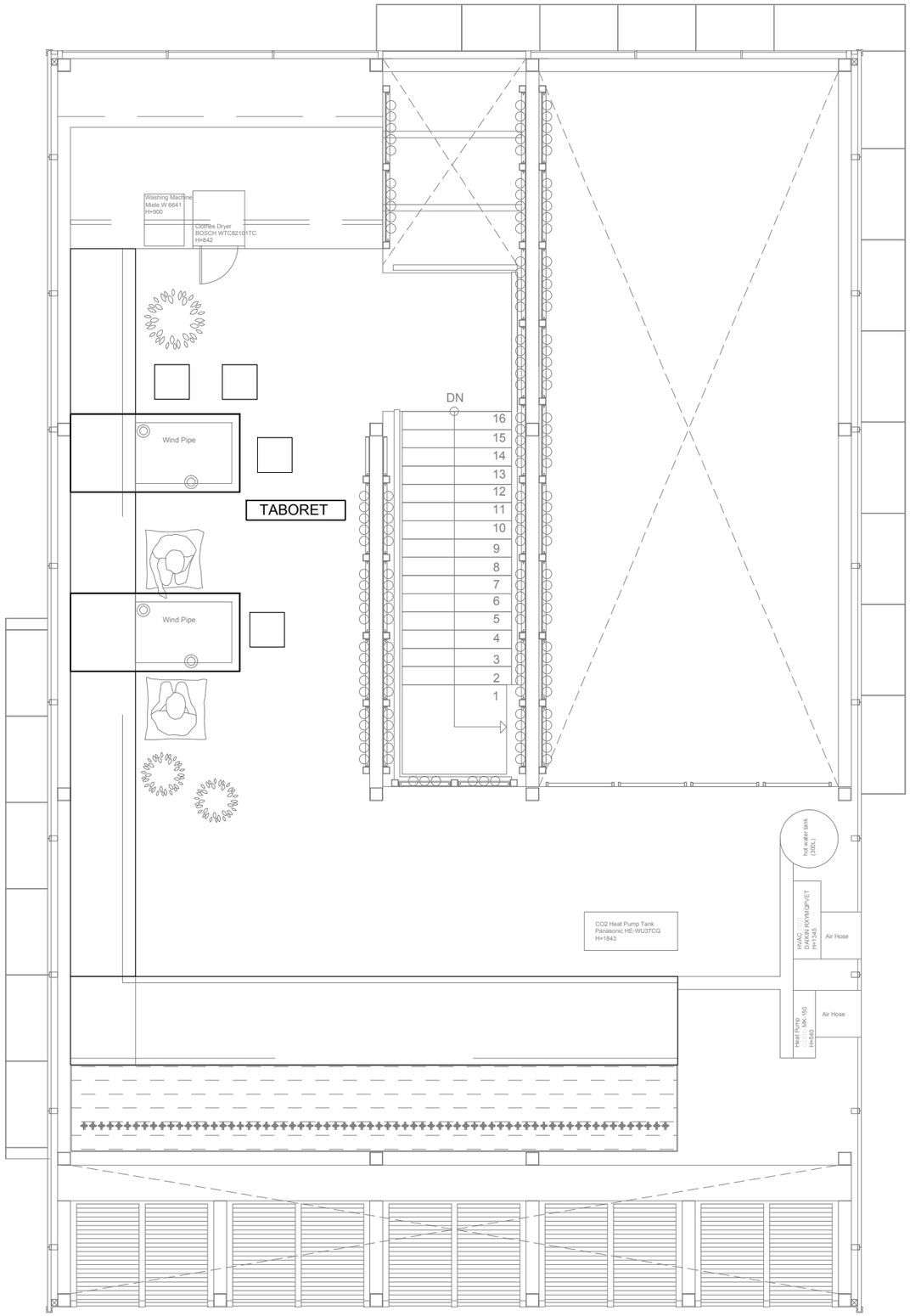

0 1 2 5 METER

FURNITURE LIST

TYPE	IMAGE	SIZE(L*W*H) mm
TABORET		400*400*400

Solar Decathlon Europe

Project: ORCHID HOUSE

Institution: 國立交通大學 National Chiao Tung University

NCTU Architecture 國立交通大學建築研究所

Team Name: NCTU/UNICODE

Address: 1001 Ta-Hsueh Road
Hsinchu City 30010
Taiwan

Contact: www.sde.tw

Consultants:

Note:

Mark	Date	Description
DN	2013/04/01	SD Submission
DN	2013/07/01	DDc Submission
ST	2013/11/01	DD Submission
ST	2014/03/03	CD Submission
ST	2014/04/30	CD Submission
ST	2014/06/02	CD Submission

Drawn by: TW

Checked by: DN

Scale: 1:60

Unit: mm

DWG. Title: MEZZANINE FLOOR FURNISHINGS

DWG. No.: IN-302

PAGE: 118

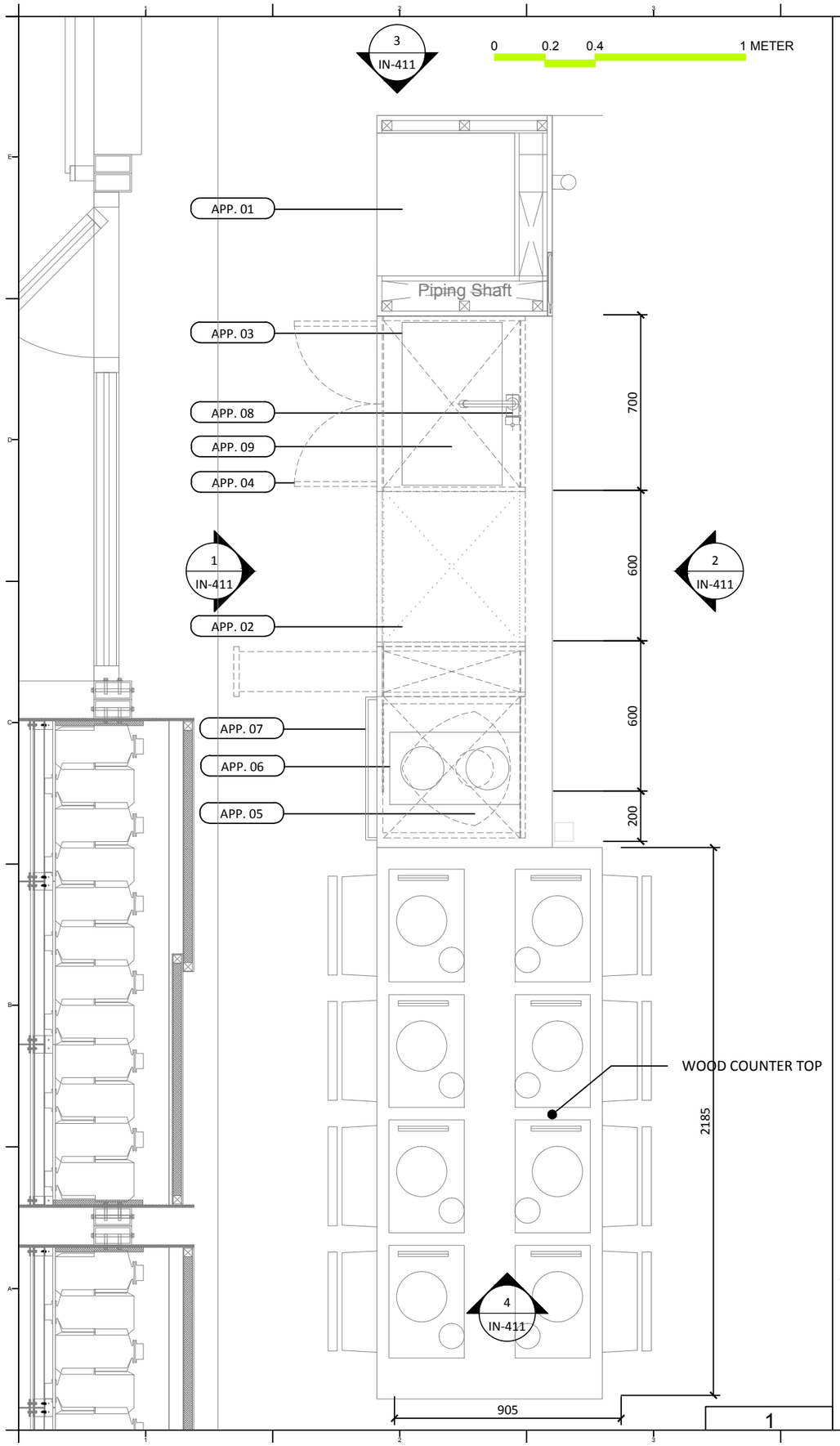

APPLIANCE LIST

APP. No	TYPE	BRAND	TYPE	LOCATION	SIZE (W*D*H)	NOTE
APP. 01	REFRIGERATOR	MIELE	KFN 37452 i DE	KITCHEN	560x550x1772	
APP. 02	DISH WASHER	MIELE	G6995 SCVi K2O	KITCHEN	598*570*845-910	
APP. 03	SINK	HCG	BKJ650	KITCHEN	650x400x190	
APP. 04	CABINET	HCG		KITCHEN	3210x900	
APP. 05	HOOD	BEST	GLOSS	KITCHEN	455x435x830-1180	
APP. 06	INDUCTION TOP	MIELE	Domino CS 1112 E	KITCHEN	272x500	
APP. 07	OVEN	MIELE	H2161 B CLST	KITCHEN	600x600x500	
APP. 08	FAUCET	HCG	KT580T	KITCHEN	25x215x295	
APP. 09	DRAIN	HCG		KITCHEN		

APP. 01	APP. 02	APP. 03	APP. 05	APP. 06	APP. 07	APP. 08

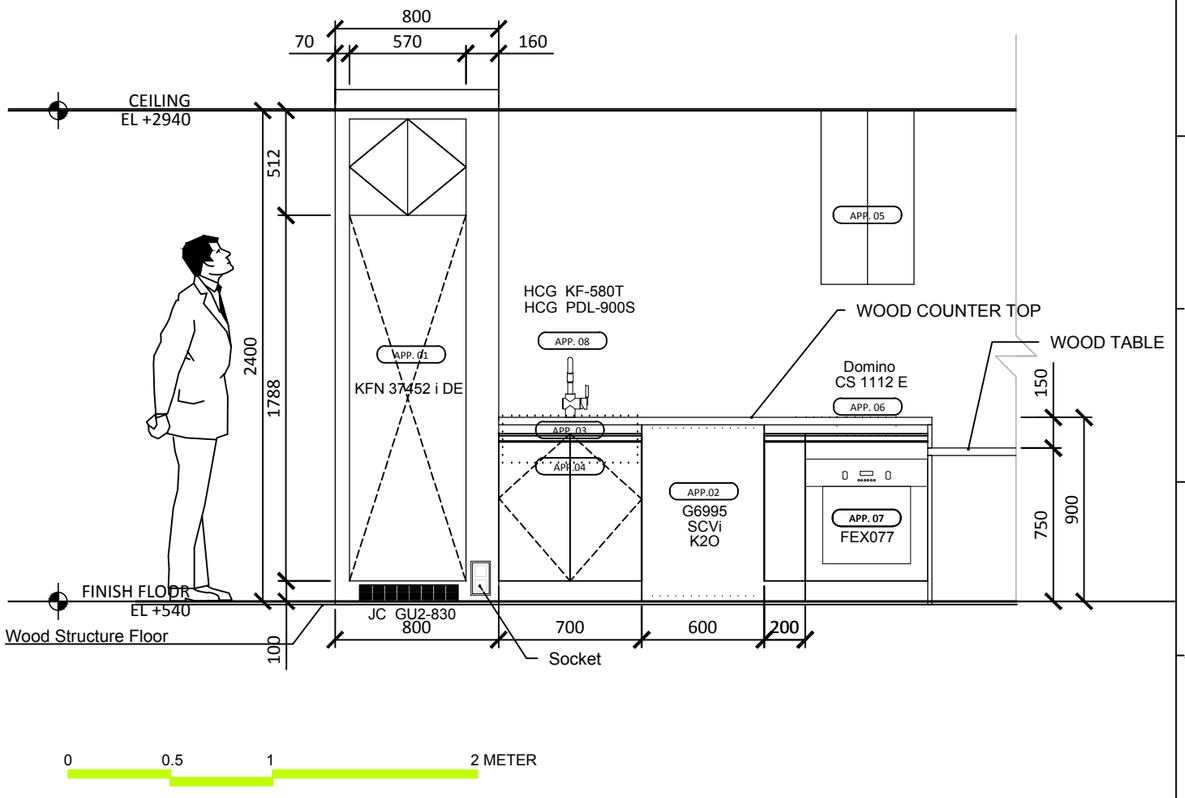

Solar Decathlon Europe

Project: ORCHID HOUSE

Institution: 國立交通大學 National Chiao Tung University

NCTU Architecture 國立交通大學建築研究所

Team Name: NCTU/UNICODE
Address: 1001 Ta-Hsueh Road Hsinchu City 30010 Taiwan
Contact: www.sde.tw

Consultants:

Note:

Mark	Date	Description
DN	2013/04/01	SD Submission
DN	2013/07/01	DDc Submission
ST	2013/11/01	DD Submission
ST	2014/03/03	CD Submission
ST	2014/04/30	CD Submission
ST	2014/06/02	CD Submission

Drawn by	TW
Checked by	-
Scale	1:20
Unit	mm

DWG. Title: KITCHEN PLAN 1

DWG. No.: IN-401

PAGE: 119

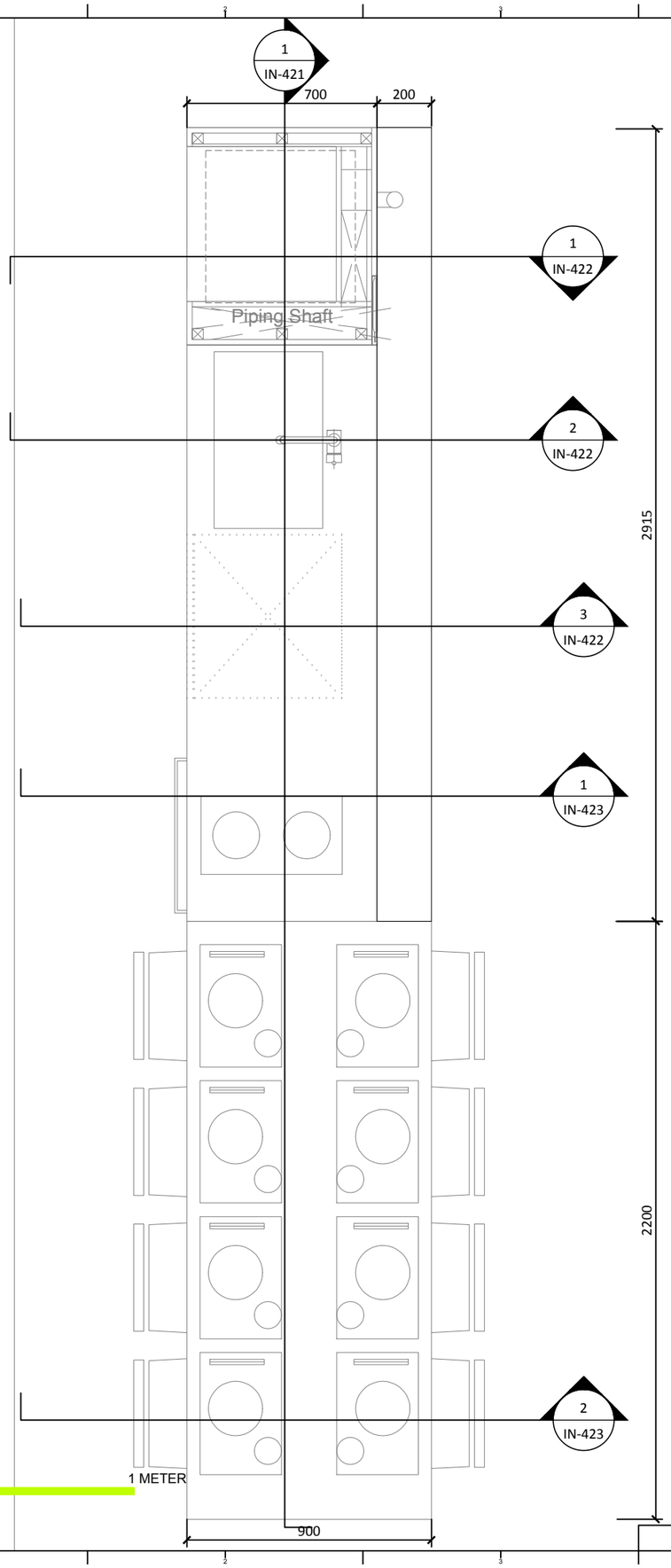

1

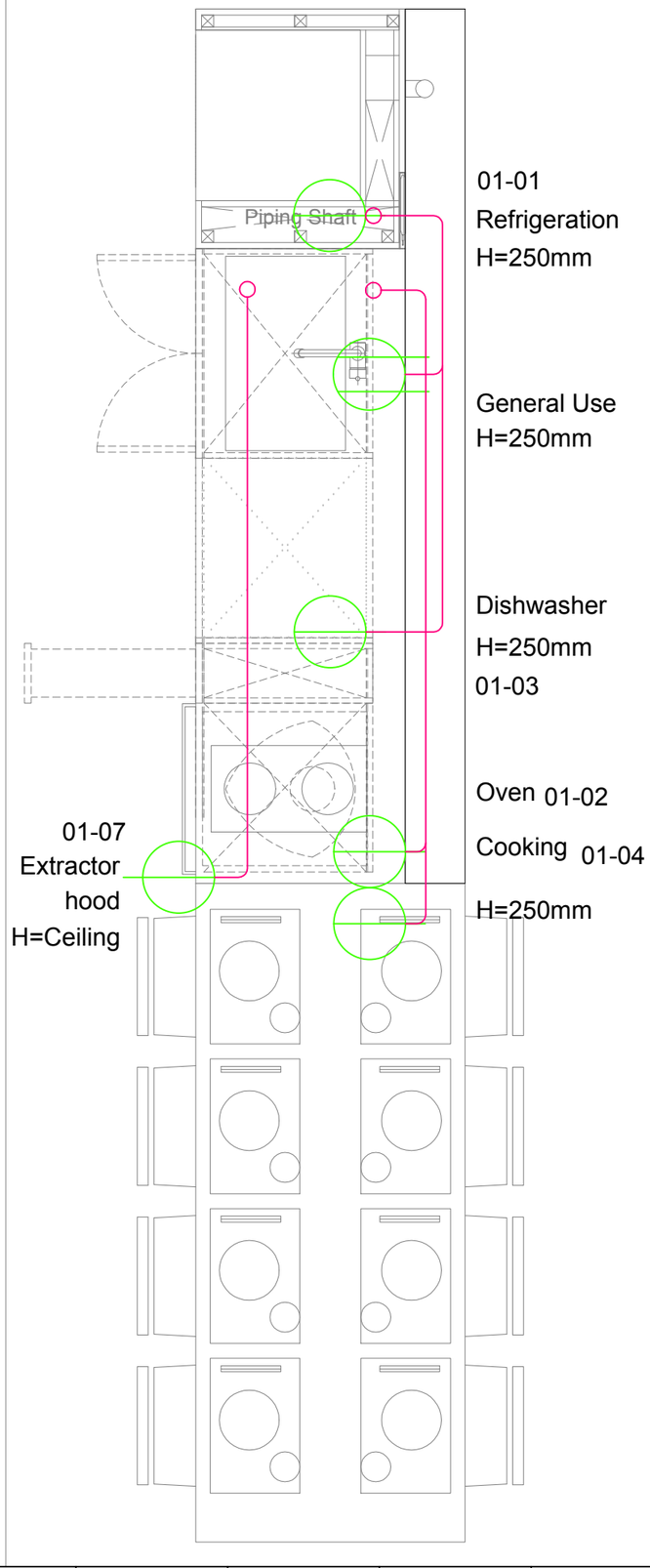

2

Solar Decathlon Europe

Project: ORCHID HOUSE

Institution: 國立交通大學 National Chiao Tung University

NCTU Architecture 國立交通大學建築研究所

Team Name: NCTU/UNICODE

Address: 1001 Ta-Hsueh Road
Hsinchu City 30010
Taiwan

Contact: www.sde.tw

Consultants:

Note:

Mark	Date	Description
DN	2013/04/01	SD Submission
DN	2013/07/01	DDc Submission
ST	2013/11/01	DD Submission
ST	2014/03/03	CD Submission
ST	2014/04/30	CD Submission
ST	2014/06/02	CD Submission

Drawn by	TW
Checked by	-
Scale	1:20
Unit	mm

DWG. Title: KITCHEN PLAN 2

DWG. No. IN-402

PAGE 120

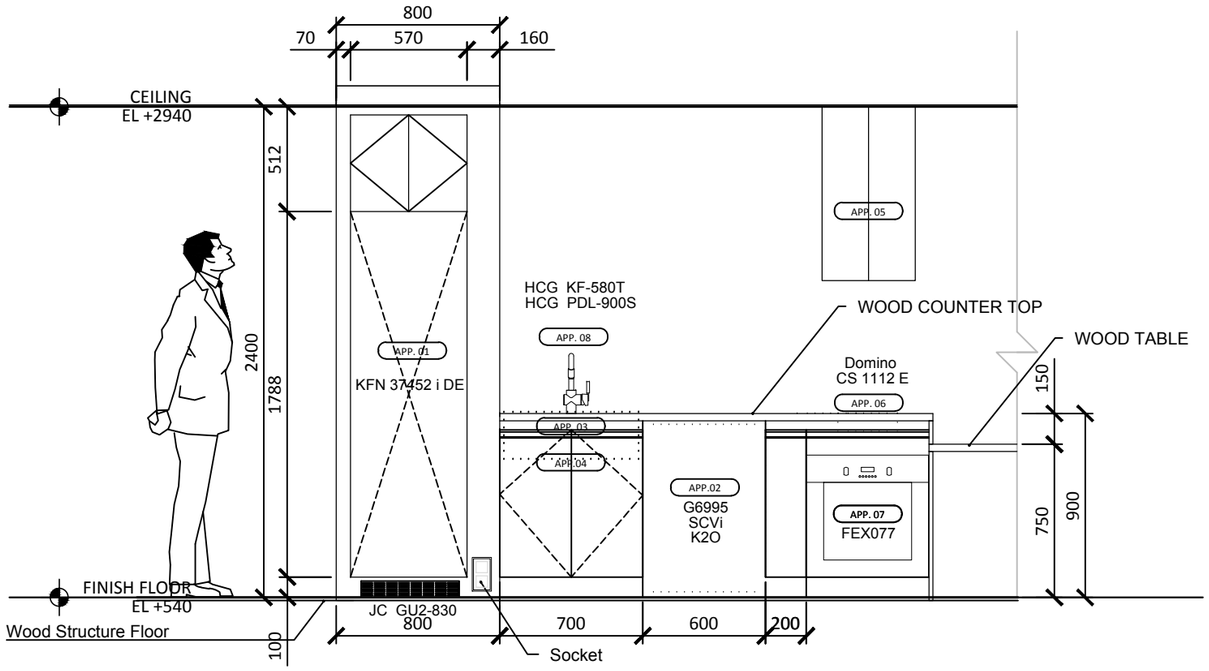

1

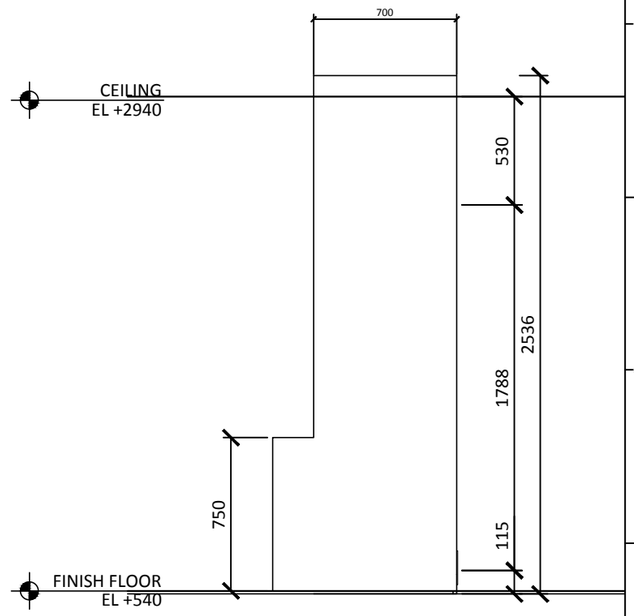

3

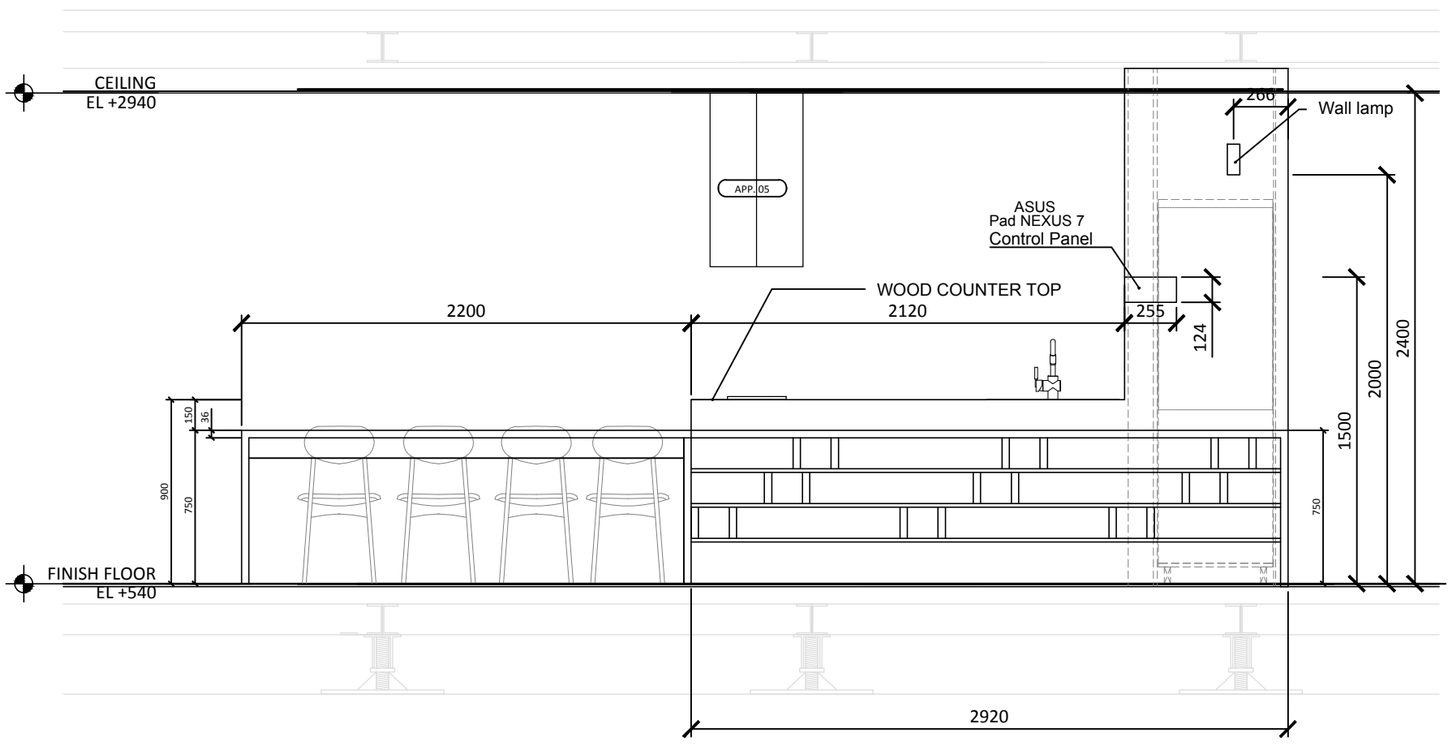

2

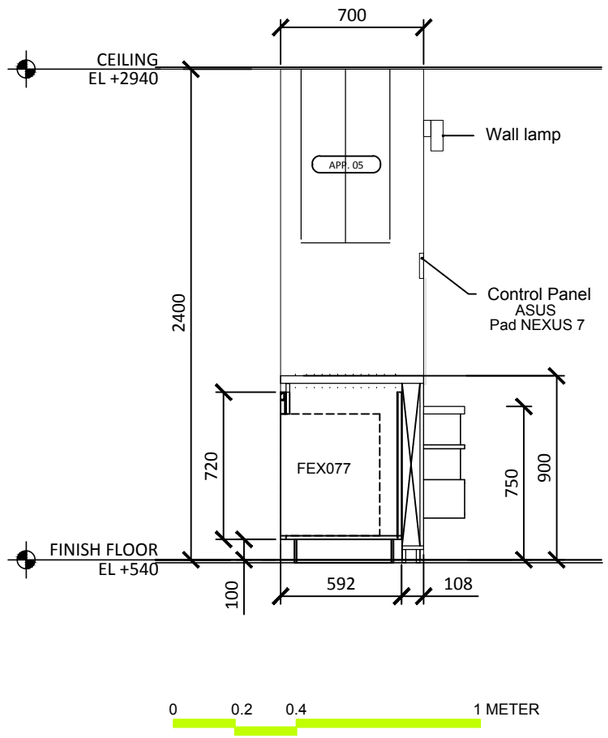

4

Solar Decathlon Europe

Project: ORCHID HOUSE

Institution: 國立交通大學 National Chiao Tung University

NCTU Architecture 國立交通大學建築研究所

Team Name:	NCTU/UNICODE
Address:	1001 Ta-Hsueh Road Hsinchu City 30010 Taiwan
Contact:	www.sde.tw

Consultants:

Note:

Mark	Date	Description
DN	2013/04/01	SD Submission
DN	2013/07/01	DDc Submission
ST	2013/11/01	DD Submission
ST	2014/03/03	CD Submission
ST	2014/04/30	CD Submission
ST	2014/06/02	CD Submission

Drawn by	TW
Checked by	-
Scale	1:30
Unit	mm

DWG. Title

KITCHEN ELEVATIONS

DWG. No. IN-411

PAGE 121

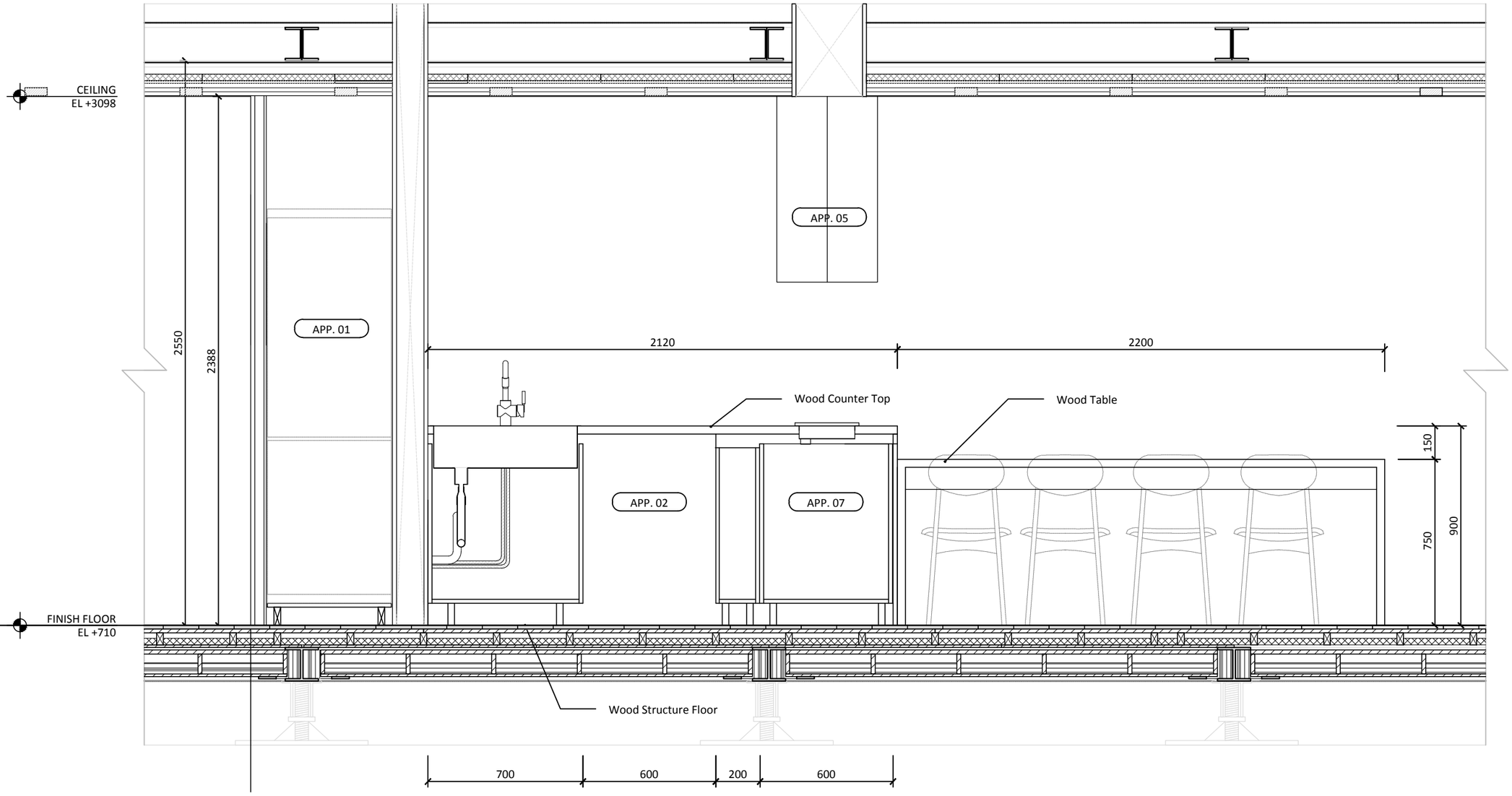

Solar Decathlon Europe

Project:

ORCHID HOUSE

Institution:

國立交通大學 National Chiao Tung University

NCTU Architecture 國立交通大學建築研究所

Team Name: NCTU/UNICODE

Address: 1001 Ta-Hsueh Road
Hsinchu City 30010
Taiwan

Contact: www.sde.tw

Consultants:

Note:

Mark	Date	Description
DN	2013/04/01	SD Submission
DN	2013/07/01	DDc Submission
ST	2013/11/01	DD Submission
ST	2014/03/03	CD Submission
ST	2014/04/30	CD Submission
ST	2014/06/02	CD Submission

Drawn by	TW
Checked by	ST
Scale	1:20
Unit	mm

DWG. Title

KITCHEN SECTION 1

DWG. No. IN-421

PAGE 122

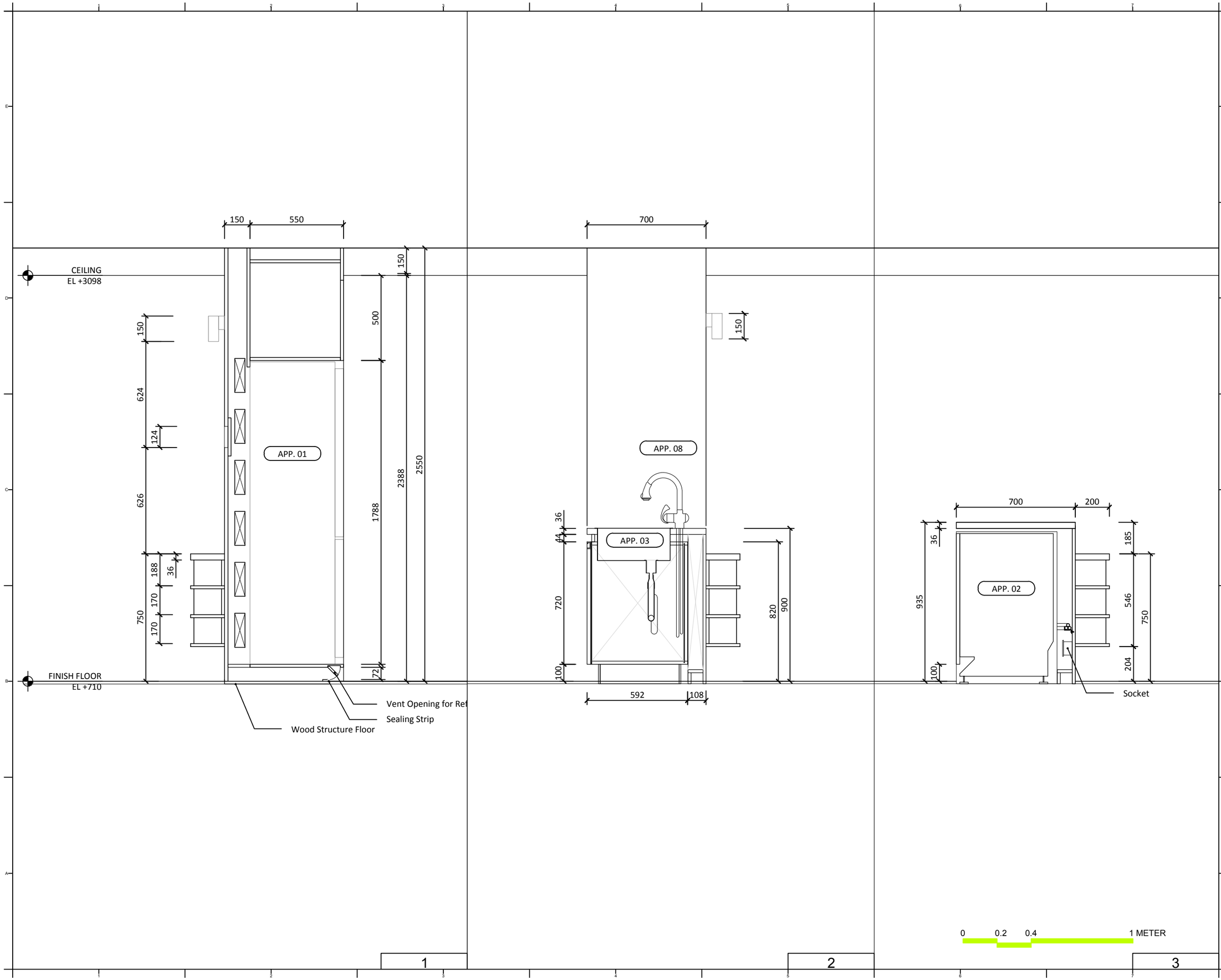

Solar Decathlon Europe

Project: ORCHID HOUSE

Institution: 國立交通大學 National Chiao Tung University

NCTU Architecture 國立交通大學建築研究所

Team Name: NCTU/UNICODE

Address: 1001 Ta-Hsueh Road
Hsinchu City 30010
Taiwan

Contact: www.sde.tw

Consultants:

Note:

Mark	Date	Description
DN	2013/04/01	SD Submission
DN	2013/07/01	DDc Submission
ST	2013/11/01	DD Submission
ST	2014/03/03	CD Submission
ST	2014/04/30	CD Submission
ST	2014/06/02	CD Submission

Drawn by	CF
Checked by	ST
Scale	1:20
Unit	mm

DWG. Title

KITCHEN SECTION 2

DWG. No. IN-422

PAGE 123

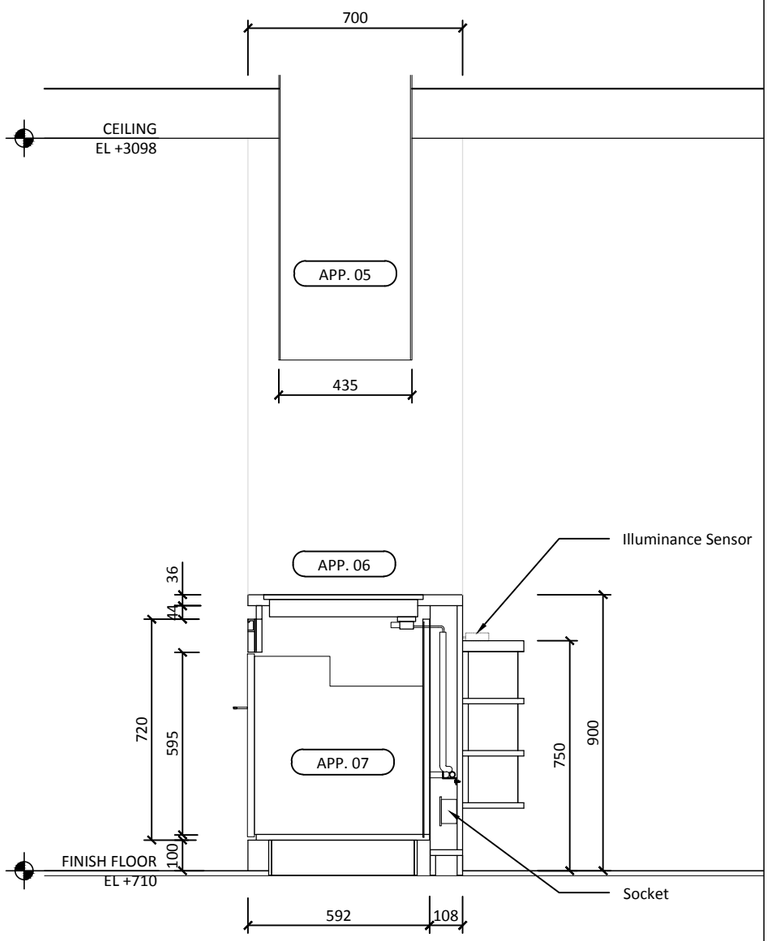

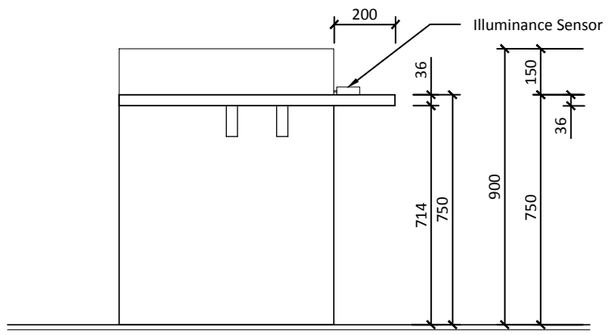

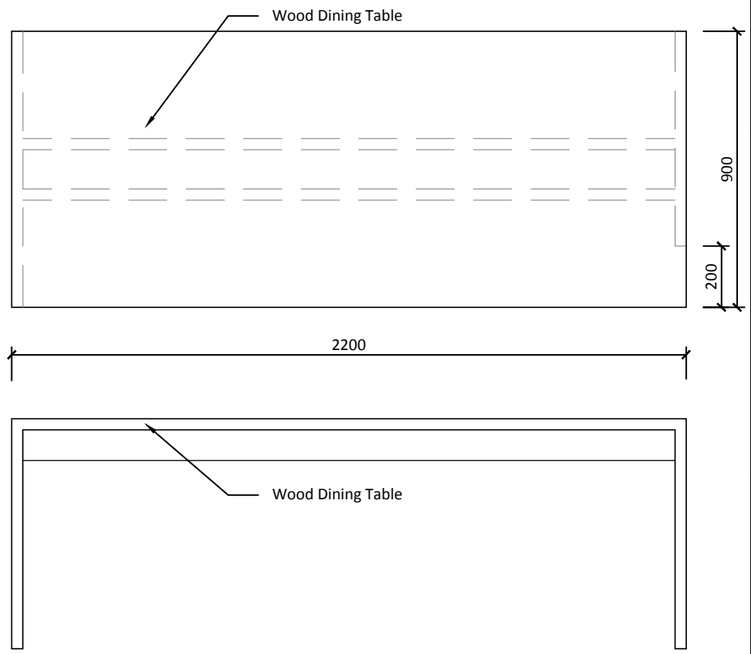

0 0.2 0.4 1 METER

1

2

Solar Decathlon Europe

Project: ORCHID HOUSE

Institution: 國立交通大學 National Chiao Tung University

NCTU Architecture 國立交通大學建築研究所

Team Name: NCTU/UNICODE

Address: 1001 Ta-Hsueh Road
Hsinchu City 30010
Taiwan

Contact: www.sde.tw

Consultants:

Note:

Mark	Date	Description
DN	2013/04/01	SD Submission
DN	2013/07/01	DDc Submission
ST	2013/11/01	DD Submission
ST	2014/03/03	CD Submission
ST	2014/04/30	CD Submission
ST	2014/06/02	CD Submission

Drawn by	CF
Checked by	ST
Scale	1:20
Unit	mm

DWG. Title

KITCHEN SECTION 3

DWG. No. IN-423

PAGE 124

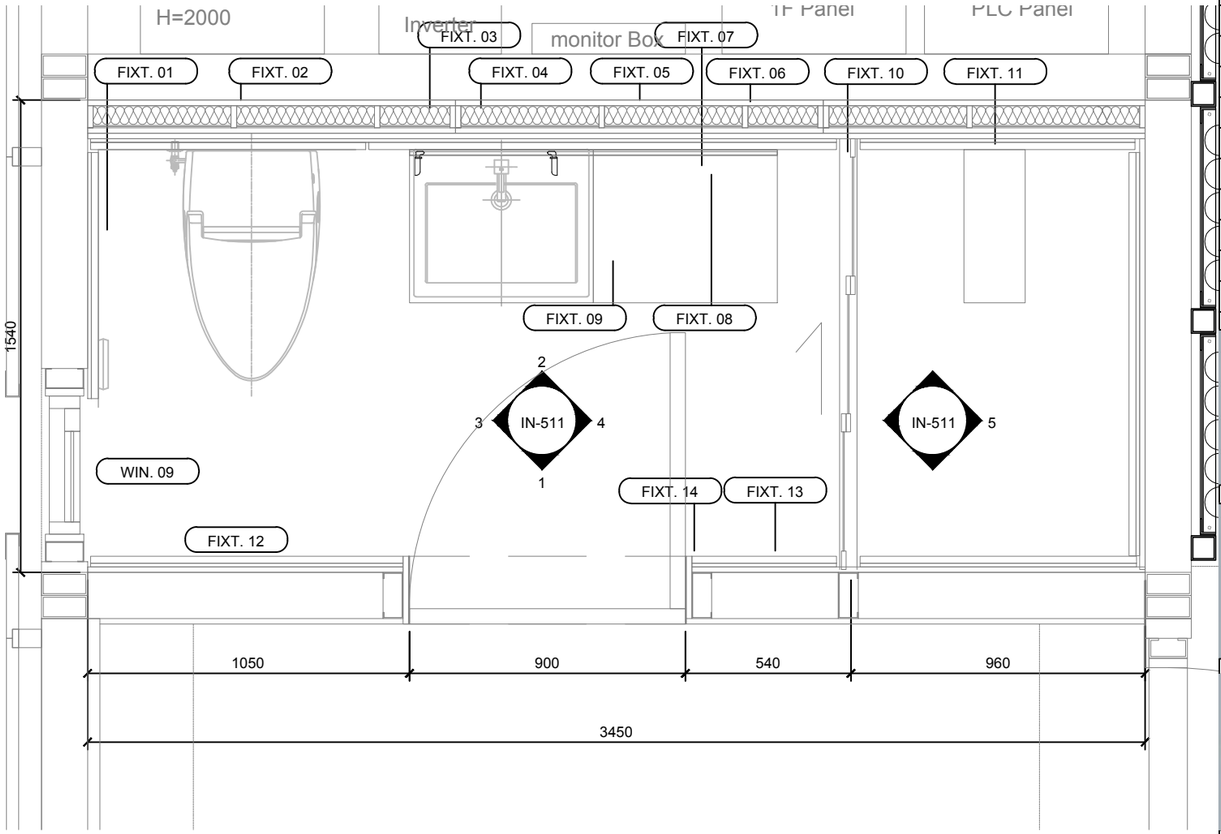

FIXED FURNITURE LIST

FIXT. No	TYPE	BRAND	LOCATION	SIZE (W*D*H)	TYPE
FIXT. 01	TOILET PAPER HOLDER	HCG	BATHROOM	170x10x135	BA208
FIXT. 02	INTELLIGENT TOLIET	HCG	BATHROOM	800x460x625	C3016
FIXT. 03	CABINET	HCG	BATHROOM	1500x500x700	LCP400-4115NP
FIXT. 04	MIRROR	HCG	BATHROOM	1200x800x80	BA2826
FIXT. 05	TUMBLER HOLDER	HCG	BATHROOM	245x130x105	BA202
FIXT. 06	SOAP DISH	HCG	BATHROOM	300x140x105	BA207
FIXT. 07	TEMPERATURE CONTROL FAUCET	HCG	BATHROOM	235x60x180	LF3167PT(AW)
FIXT. 08	DRAINGE TAKEOVER	HCG	BATHROOM		LF725L-B1
FIXT. 09	SINK	HCG	BATHROOM	480x570x155	L400SAdb-4115N
FIXT. 10	ACCESSIBLE SHOWER DOOR	HCG	BATHROOM	1541x50x2200	SK2W1619
FIXT. 11	SMART SHOWER COLUM	HCG	BATHROOM	500x190x1400	ST8791
FIXT. 12	SHOWER WALL	HCG	BATHROOM	897x1797x4	STANDARD 4142
FIXT. 13	DOUBLE TOWEL RACK	HCG	BATHROOM	300x110x160	BA203
FIXT. 14	CLOTH HOOK	HCG	BATHROOM	145x110x105	BA206

FIXT. 01 FIXT. 02 FIXT. 03 FIXT. 04 FIXT. 05 FIXT. 06

FIXT. 07 FIXT. 08 FIXT. 09 FIXT. 10 FIXT. 11 FIXT. 12

FIXT. 13 FIXT. 14

陶板分割尺寸：

1. 897x676 五片
2. 897x897 五片
3. 1533x676 二片
4. 897x835 五片
5. 1460x676 一片
6. 1460x897 一片
7. 1320x835 一片

0 0.2 0.4 1 METER

Solar Decathlon Europe

Project: ORCHID HOUSE

Institution: 國立交通大學 National Chiao Tung University

NCTU Architecture 國立交通大學建築研究所

Team Name: NCTU/UNICODE

Address: 1001 Ta-Hsueh Road Hsinchu City 30010 Taiwan

Contact: www.sde.tw

Consultants:

Note:

N

Mark	Date	Description
DN	2013/04/01	SD Submission
DN	2013/07/01	DDc Submission
ST	2013/11/01	DD Submission
ST	2014/03/03	CD Submission
ST	2014/04/30	CD Submission
ST	2014/06/02	CD Submission

Drawn by: TW

Checked by: -

Scale: 1:20

Unit: mm

DWG. Title: BATHROOM PLAN

DWG. No.: IN-501

PAGE: 125

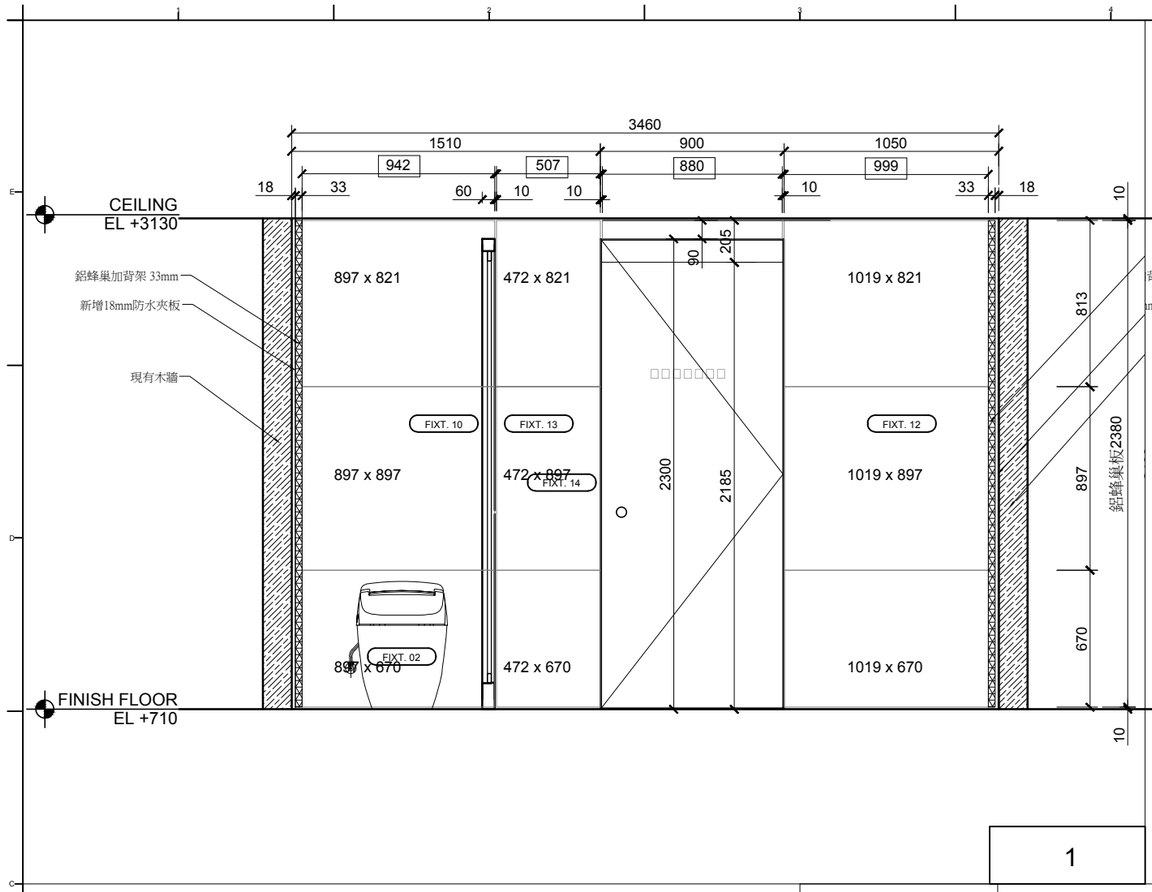

1

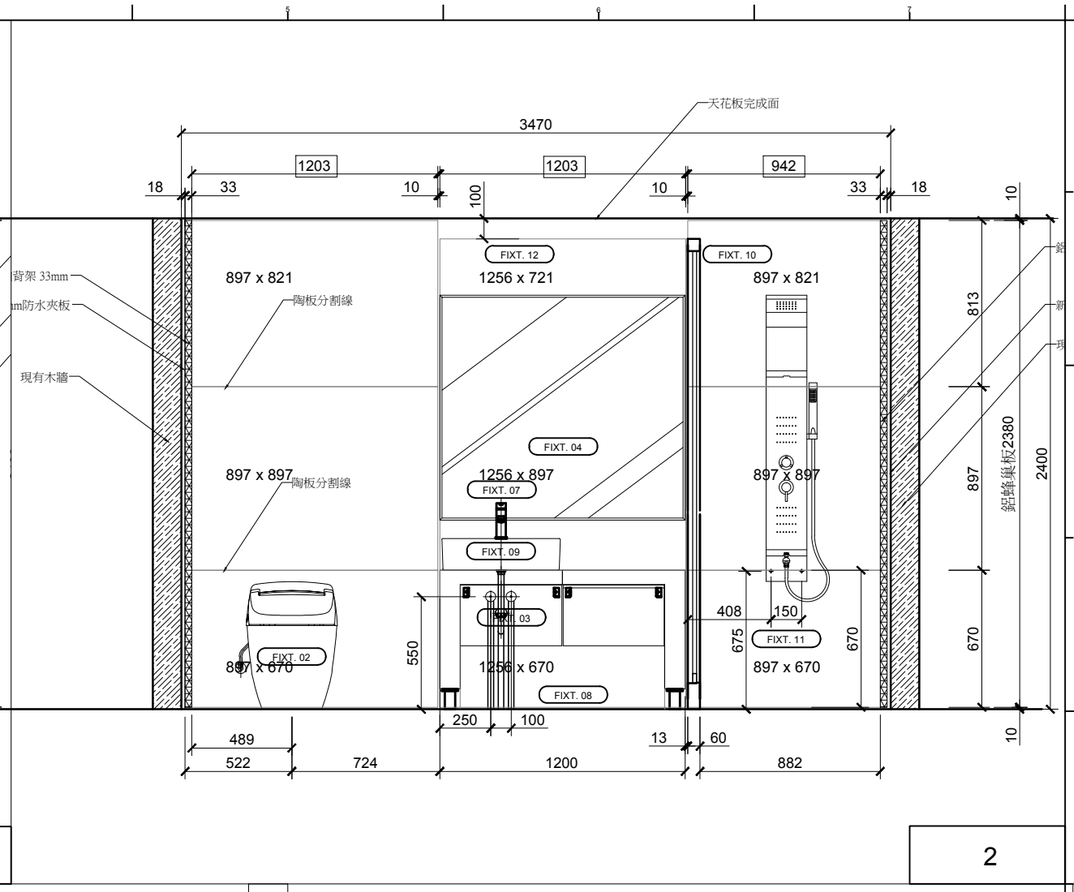

2

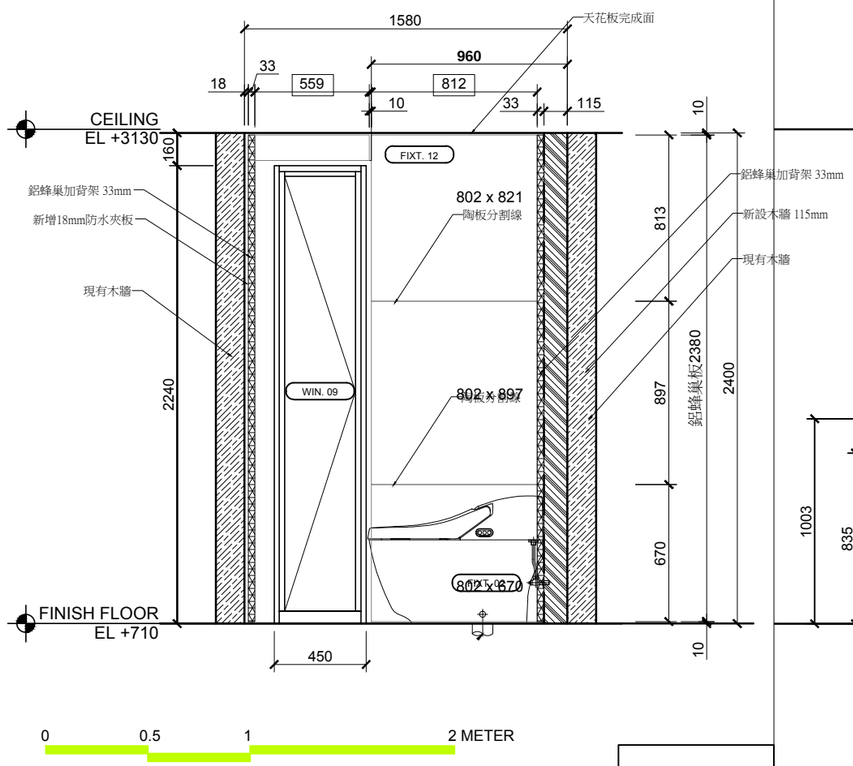

3

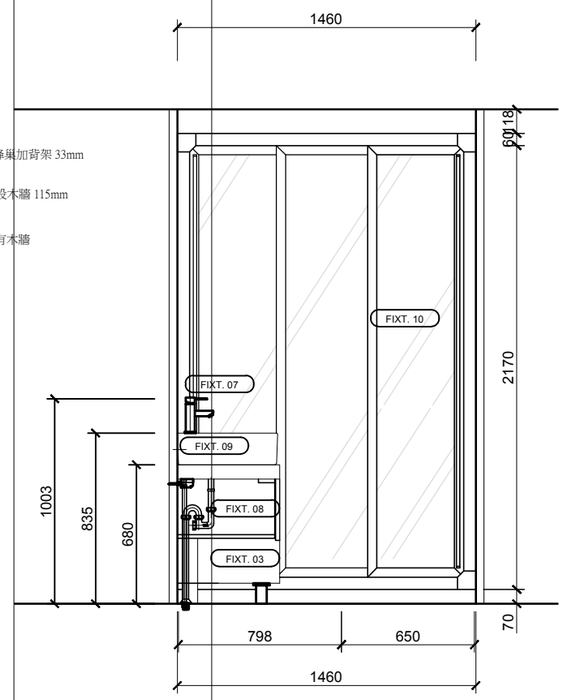

4

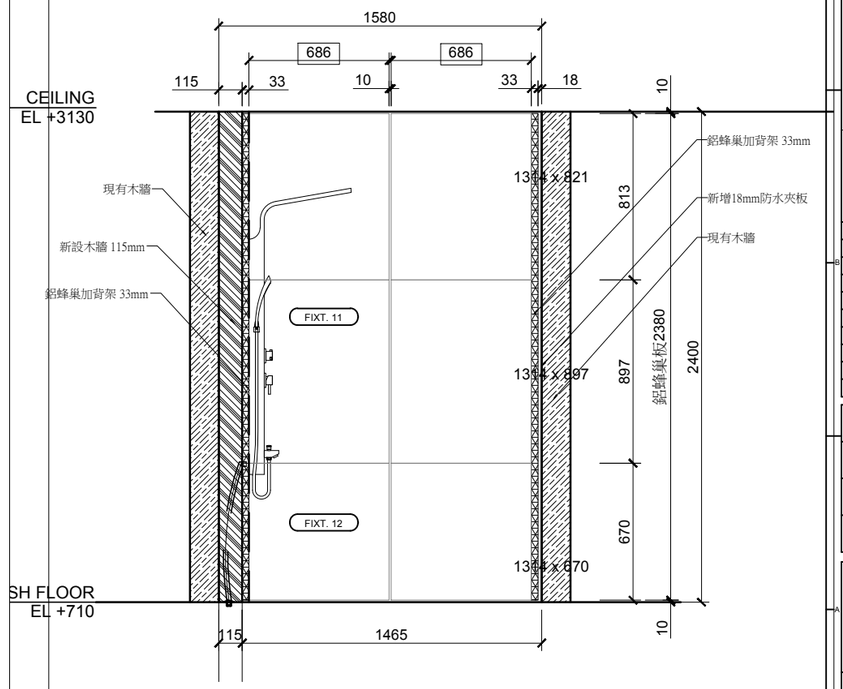

5

0 0.5 1 2 METER

Solar Decathlon Europe

Project: ORCHID HOUSE

Institution: 國立交通大學 National Chiao Tung University

NCTU Architecture 國立交通大學建築研究所

Team Name: NCTU/UNICODE

Address: 1001 Ta-Hsueh Road Hsinchu City 30010 Taiwan

Contact: www.sde.tw

Consultants:

Note:

Mark	Date	Description
DN	2013/04/01	SD Submission
DN	2013/07/01	DDc Submission
ST	2013/11/01	DD Submission
ST	2014/03/03	CD Submission
ST	2014/04/30	CD Submission
ST	2014/06/02	CD Submission

Drawn by	TW
Checked by	BT
Scale	1:30
Unit	mm

DWG. Title

BATHROOM ELEVATIONS

DWG. No. IN-511

PAGE 126

Solar Decathlon Europe

Project:

ORCHID HOUSE

Institution:

國立交通大學 National Chiao Tung University

NCTU Architecture 國立交通大學建築研究所

Team Name: NCTU/UNICODE

Address: 1001 Ta-Hsueh Road
Hsinchu City 30010
Taiwan

Contact: www.sde.tw

Consultants:

Note:

Mark	Date	Description
DN	2013/04/01	SD Submission
DN	2013/07/01	DDc Submission
ST	2013/11/01	DD Submission
ST	2014/03/03	CD Submission
ST	2014/04/30	CD Submission
ST	2014/06/02	CD Submission

Drawn by	TW
Checked by	DN
Scale	-
Unit	-

DWG. Title

INTERIOR RENDERING
ENTRANCE

DWG. No. IN-601

PAGE 127

Solar Decathlon Europe

Project:

ORCHID HOUSE

Institution:

國立交通大學
National Chiao Tung University

NCTU Architecture
國立交通大學建築研究所

Team Name: NCTU/UNICODE
Address: 1001 Ta-Hsueh Road
Hsinchu City 30010
Taiwan
Contact: www.sde.tw

Consultants:

Note:

Mark	Date	Description
DN	2013/04/01	SD Submission
DN	2013/07/01	DDc Submission
ST	2013/11/01	DD Submission
ST	2014/03/03	CD Submission
ST	2014/04/30	CD Submission
ST	2014/06/02	CD Submission

Drawn by	TW
Checked by	DN
Scale	-
Unit	-

DWG. Title
INTERIOR RENDERING
LIVING ROOM

DWG. No. IN-602

PAGE 128

Solar Decathlon Europe

Project:

ORCHID HOUSE

Institution:

國立交通大學 National Chiao Tung University

NCTU Architecture 國立交通大學建築研究所

Team Name: NCTU/UNICODE

Address: 1001 Ta-Hsueh Road
Hsinchu City 30010
Taiwan

Contact: www.sde.tw

Consultants:

Note:

Mark	Date	Description
DN	2013/04/01	SD Submission
DN	2013/07/01	DDc Submission
ST	2013/11/01	DD Submission
ST	2014/03/03	CD Submission
ST	2014/04/30	CD Submission
ST	2014/06/02	CD Submission

Drawn by	TW
Checked by	DN
Scale	-
Unit	-

DWG. Title

INTERIOR RENDERING
2ND FLOOR

DWG. No.	PAGE
IN-603	129

Solar Decathlon Europe

Project:

ORCHID HOUSE

Institution:

國立交通大學 National Chiao Tung University

NCTU Architecture 國立交通大學建築研究所

Team Name: NCTU/UNICODE

Address: 1001 Ta-Hsueh Road
Hsinchu City 30010
Taiwan

Contact: www.sde.tw

Consultants:

Note:

Mark	Date	Description
DN	2013/04/01	SD Submission
DN	2013/07/01	DDc Submission
ST	2013/11/01	DD Submission
ST	2014/03/03	CD Submission
ST	2014/04/30	CD Submission
ST	2014/06/02	CD Submission

Drawn by	TW
Checked by	DN
Scale	-
Unit	-

DWG. Title

INTERIOR RENDERING
VIEW FROM TERRACE

DWG. No. IN-604

PAGE 130

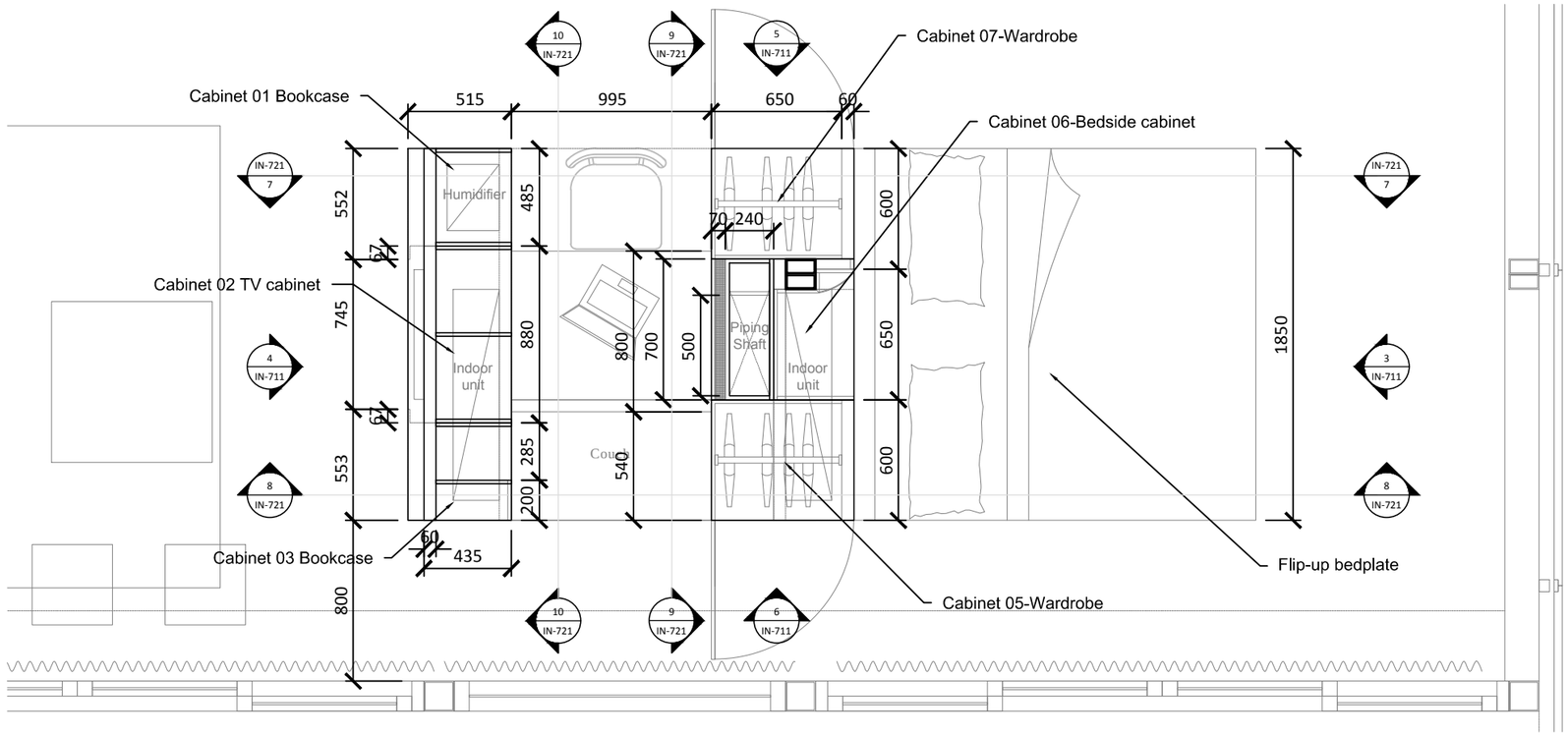

1:30 0 0.5 1 2 METER

1

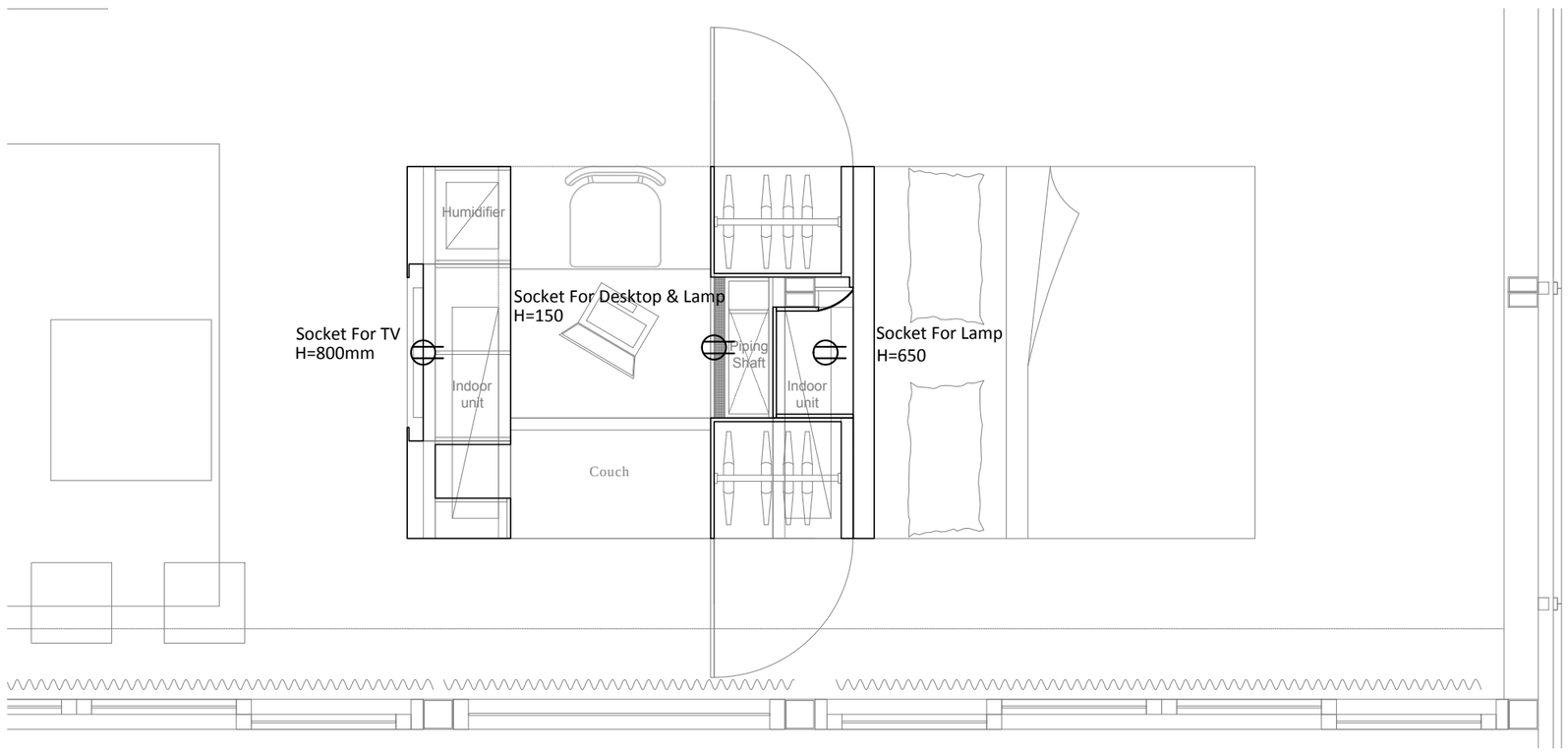

2

Solar Decathlon Europe

Project:

ORCHID HOUSE

Institution:

國立交通大學 National Chiao Tung University

NCTU Architecture 國立交通大學建築研究所

Team Name: NCTU/UNICODE

Address: 1001 Ta-Hsueh Road Hsinchu City 30010 Taiwan

Contact: www.sde.tw

Consultants:

Note:

N

Mark	Date	Description
DN	2013/04/01	SD Submission
DN	2013/07/01	DDc Submission
ST	2013/11/01	DD Submission
ST	2014/03/03	CD Submission
ST	2014/04/30	CD Submission
ST	2014/06/02	CD Submission

Drawn by	JL
Checked by	DN
Scale	1:30
Unit	mm

DWG. Title

WORKSTATION PLAN

DWG. No. IN-701

PAGE 131

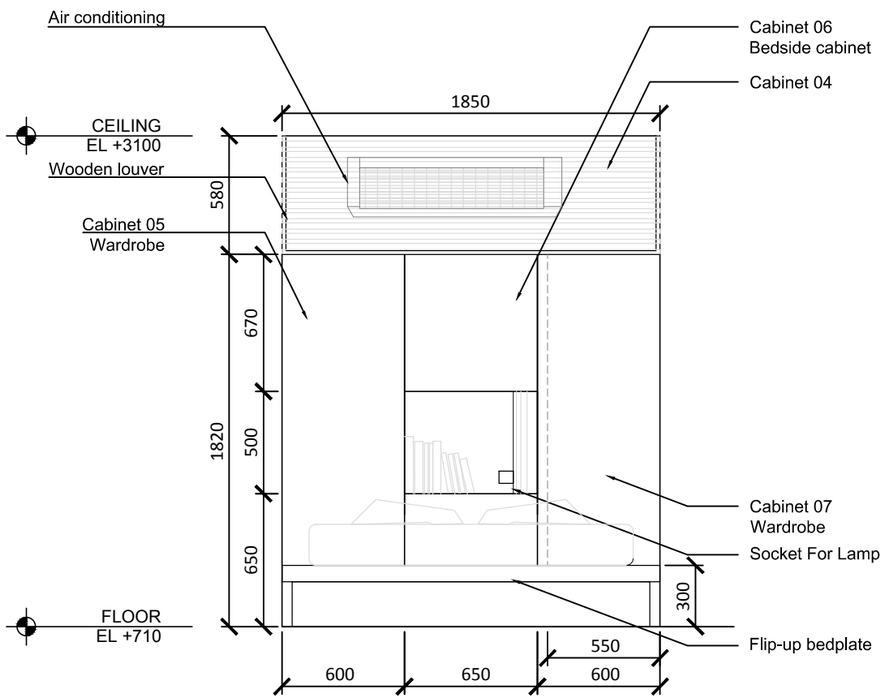

3

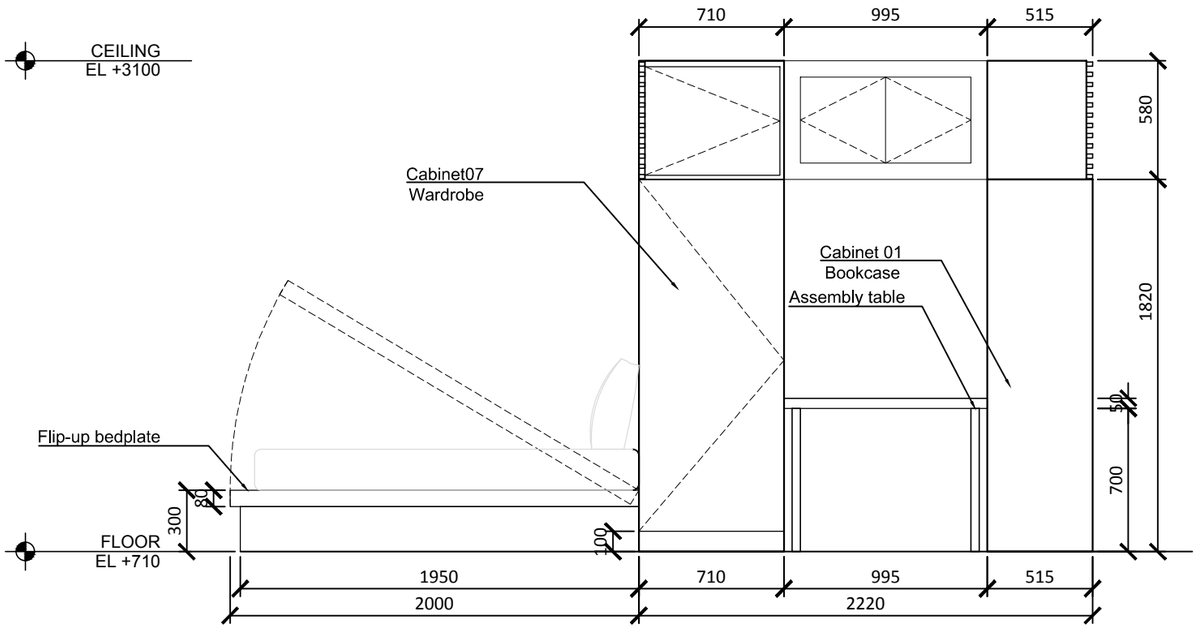

5

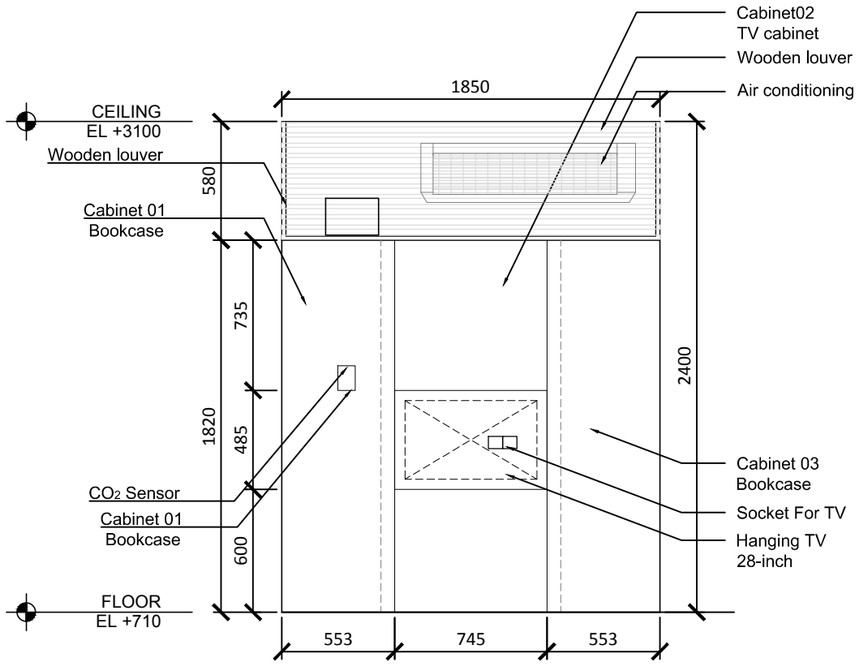

4

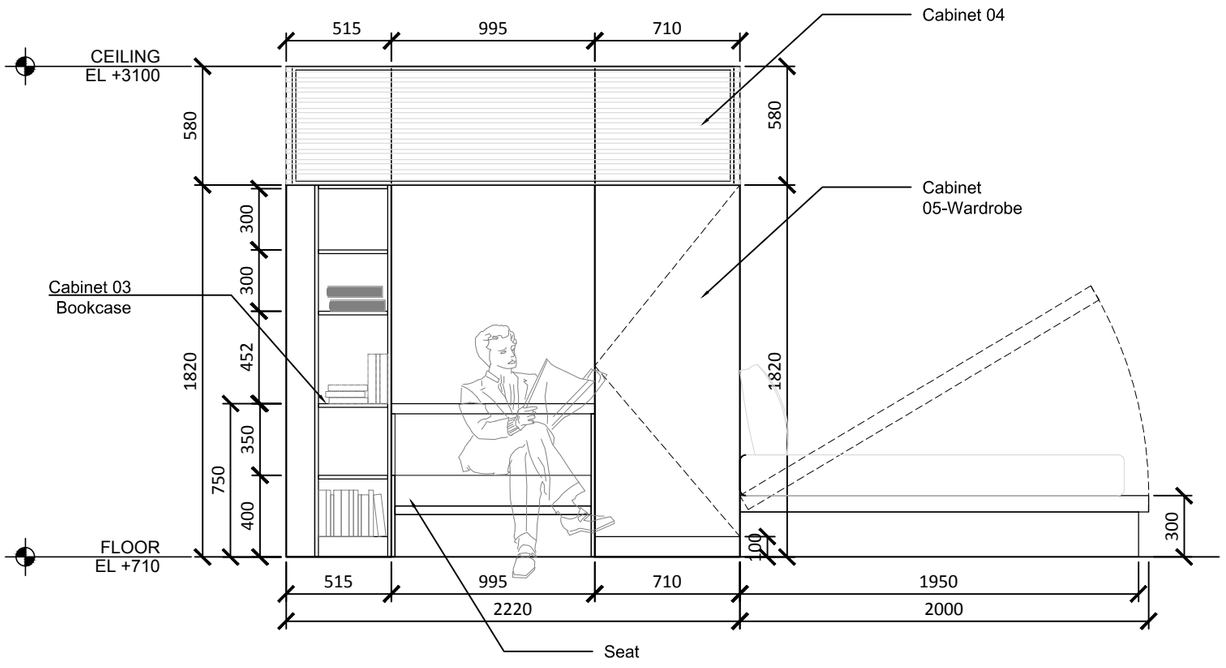

6

Solar Decathlon Europe

Project:

ORCHID HOUSE

Institution:

國立交通大學 National Chiao Tung University

NCTU Architecture
國立交通大學建築研究所

Team Name: NCTU/UNICODE

Address: 1001 Ta-Hsueh Road
Hsinchu City 30010
Taiwan

Contact: www.sde.tw

Consultants:

Note:

N

Mark	Date	Description
DN	2013/04/01	SD Submission
DN	2013/07/01	DDc Submission
ST	2013/11/01	DD Submission
ST	2014/03/03	CD Submission
ST	2014/04/30	CD Submission
ST	2014/06/02	CD Submission

Drawn by	JL
Checked by	DN
Scale	1:30
Unit	mm

DWG. Title

WORKSTATION ELEVATION

DWG. No. IN-711

PAGE 132

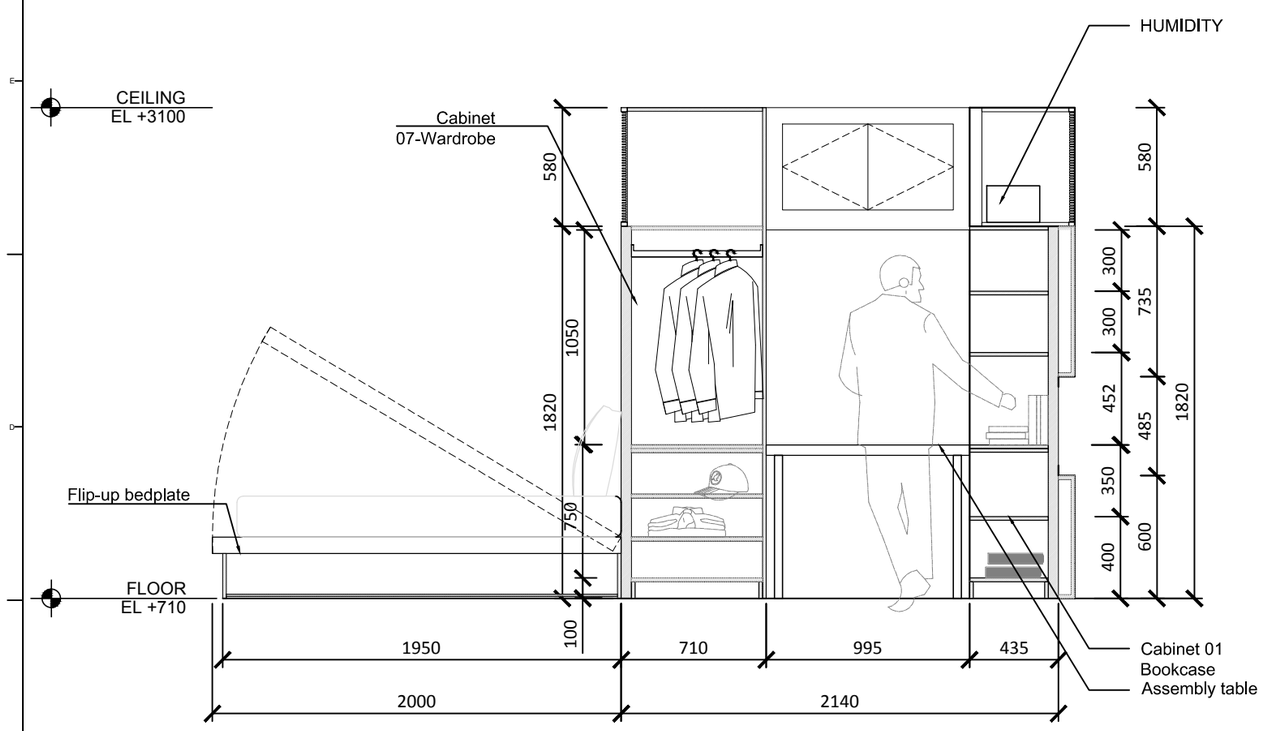

7

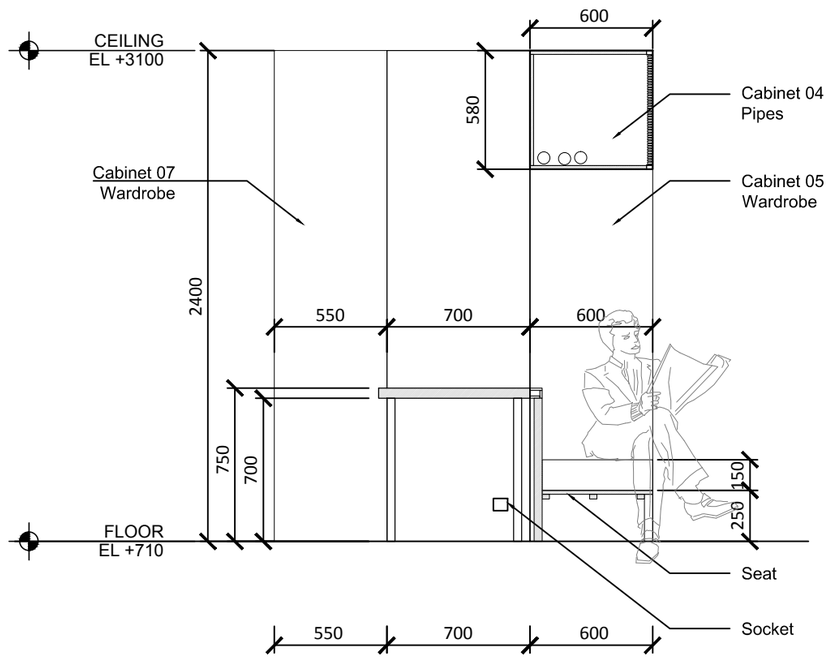

9

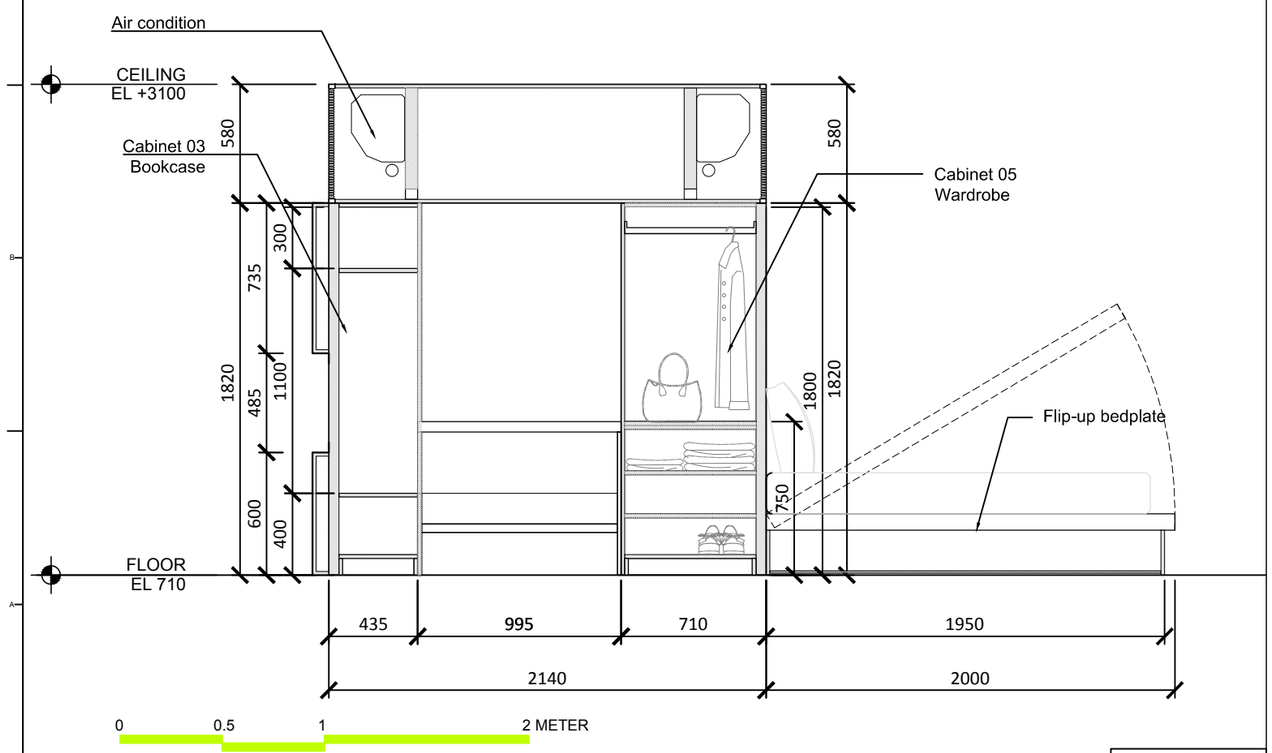

8

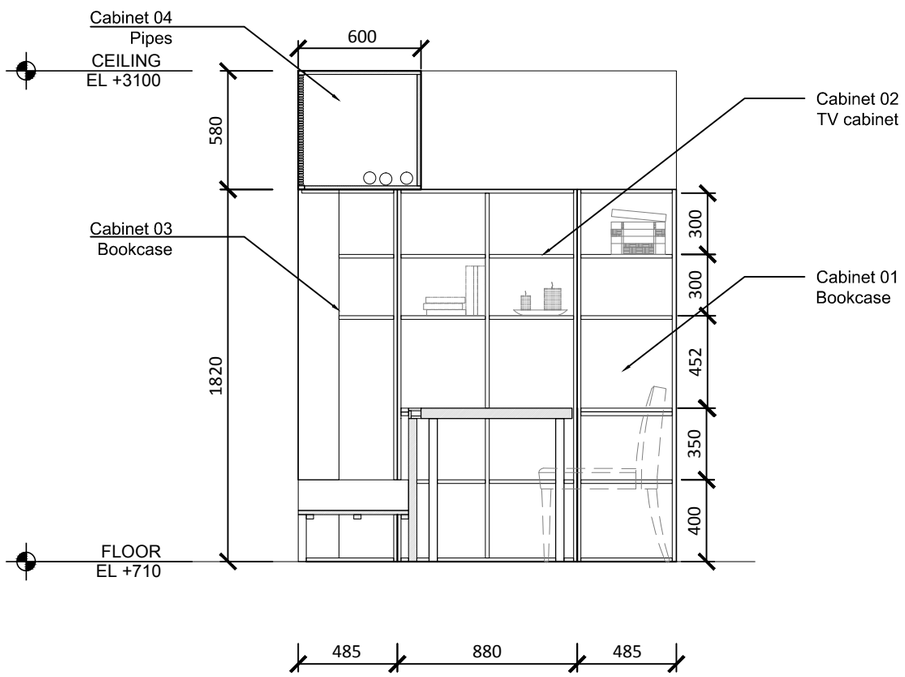

10

Solar Decathlon Europe

Project:

ORCHID HOUSE

Institution:

國立交通大學 National Chiao Tung University

NCTU Architecture 國立交通大學建築研究所

Team Name: NCTU/UNICODE

Address: 1001 Ta-Hsueh Road
Hsinchu City 30010
Taiwan

Contact: www.sde.tw

Consultants:

Note:

Mark	Date	Description
DN	2013/04/01	SD Submission
DN	2013/07/01	DDc Submission
ST	2013/11/01	DD Submission
ST	2014/03/03	CD Submission
ST	2014/04/30	CD Submission
ST	2014/06/02	CD Submission

Drawn by	JL
Checked by	DN
Scale	1:30
Unit	mm

DWG. Title

WORKSTATION SECTION

DWG. No. IN-721

PAGE 133

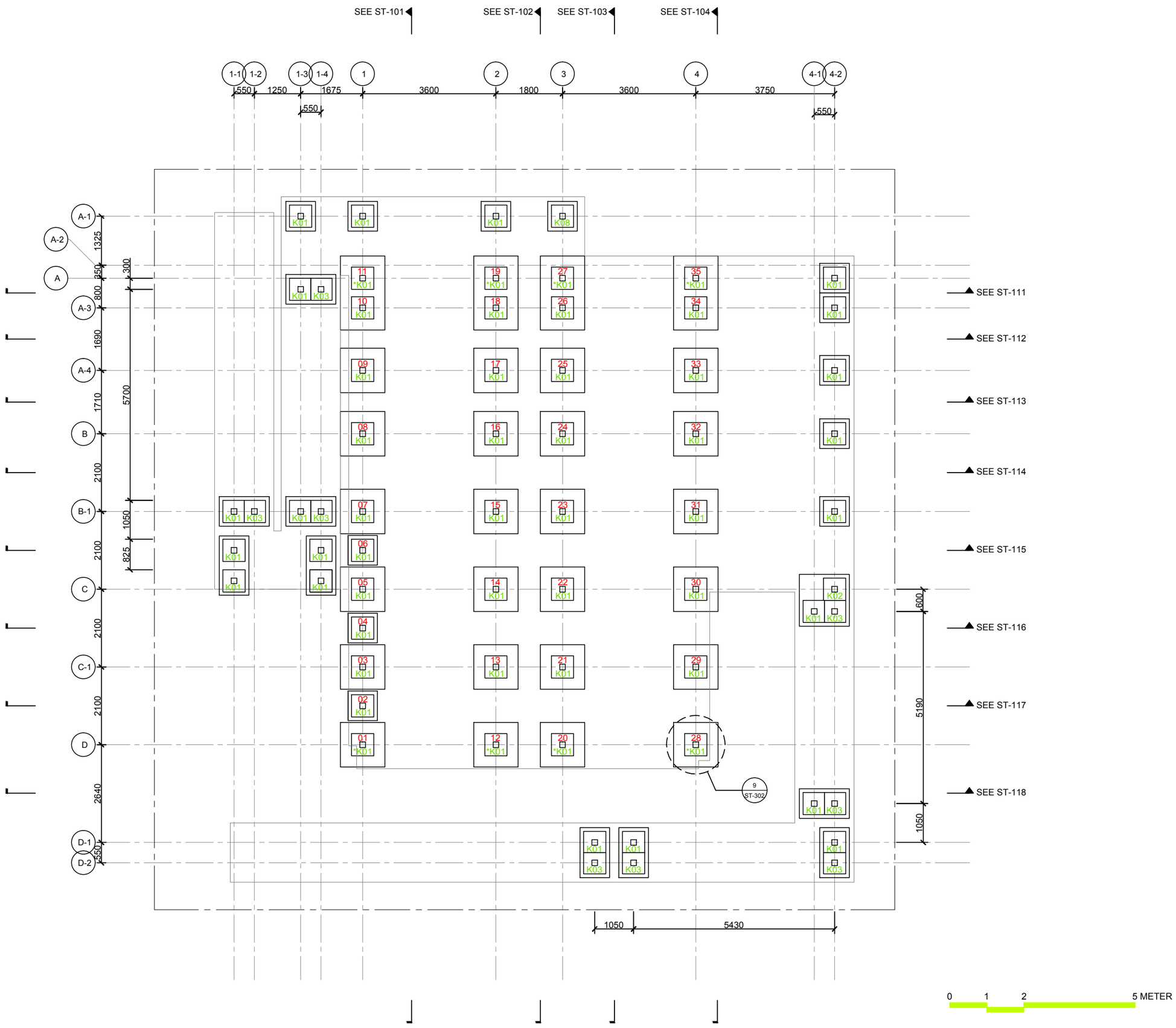

Solar Decathlon Europe

Project: ORCHID HOUSE

Institution: 國立交通大學 National Chiao Tung University

NCTU Architecture 國立交通大學建築研究所

Team Name: NCTU/UNICODE

Address: 1001 Ta-Hsueh Road
Hsinchu City 30010
Taiwan

Contact: www.sde.tw

Consultants: RUENTEX CONSTRUCTION GROUP

Note:

Mark	Date	Description
DN	2013/04/01	SD Submission
DN	2013/07/01	DDc Submission
ST	2013/11/01	DD Submission
ST	2014/03/03	CD Submission
ST	2014/04/30	CD Submission
ST	2014/06/02	CD Submission

Drawn by	CF
Checked by	BT
Scale	1:100
Unit	mm

DWG. Title

FOUNDATION PLAN AND DETAILS AND MARKING

DWG. No. ST-001

PAGE 134

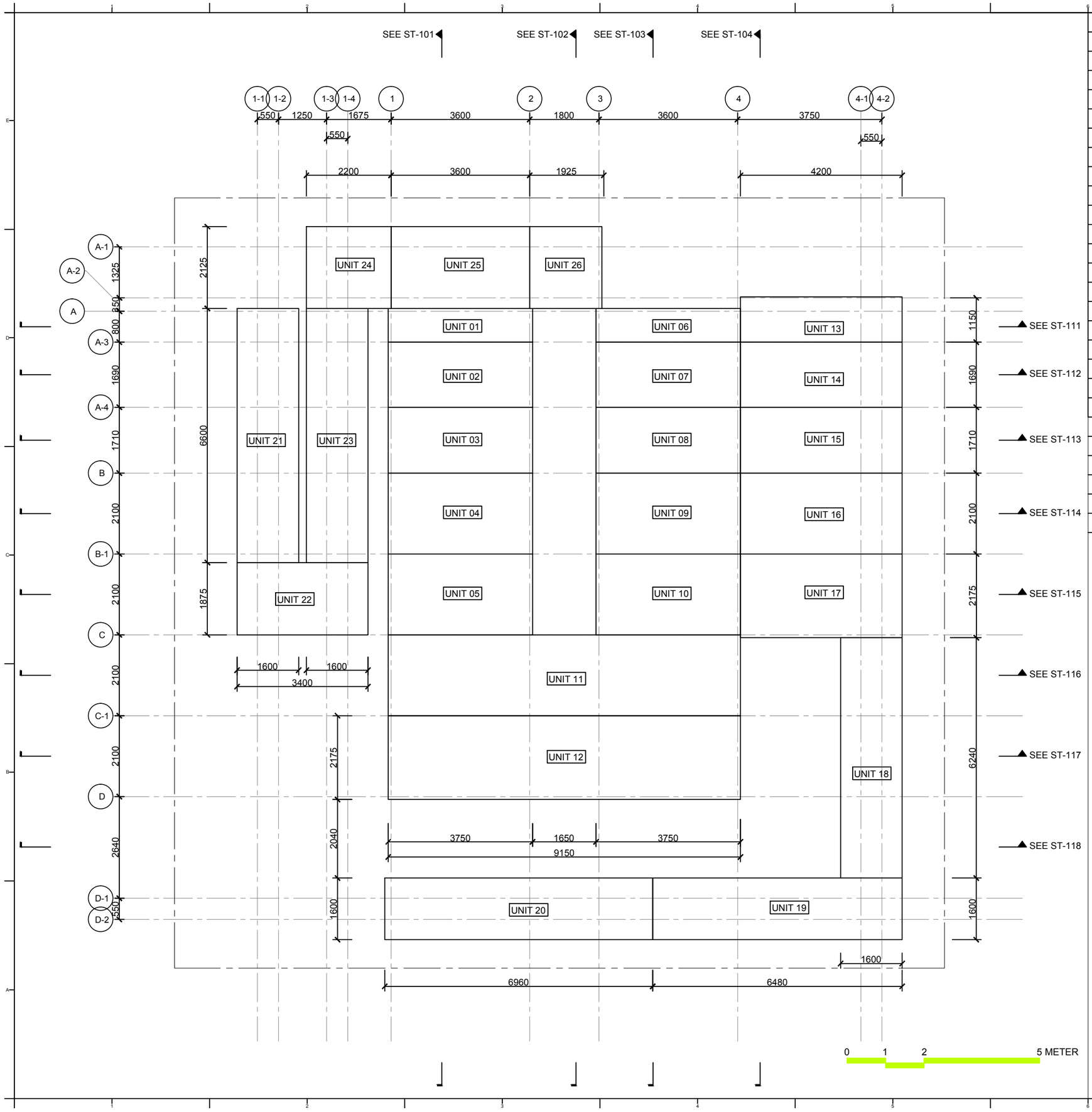

UNIT No.	Size (L x W x D)
UNIT 01	3750 x 875 x 150
UNIT 02	3750 x 1690 x 150
UNIT 03	3750 x 1710 x 150
UNIT 04	3750 x 2100 x 150
UNIT 05	3750 x 2100 x 150
UNIT 06	3750 x 875 x 150
UNIT 07	3750 x 1690 x150
UNIT 08	3750 x 1710 x 150
UNIT 09	3750 x 2100 x 150
UNIT 10	3750 x 2100 x 150
UNIT 11	9150 x 2100 x 150
UNIT 12	9150 x 2175 x 150
UNIT 13	4200 x 1150 x 150
UNIT 14	4200 x 1690 x 150
UNIT 15	4200 x 1710 x 150
UNIT 16	4200 x 2100 x 150
UNIT 17	4200 x 2175 x 150
UNIT 18	6240 x 1600 x 150
UNIT 19	6480 x 1600 x 150
UNIT 20	6960 x 1600 x 150
UNIT 21	6600 x 1600 x 150
UNIT 22	3400 x 1875 x 150
UNIT 23	6600 x 1600 x 150
UNIT 24	2200 x 2125 x 150
UNIT 25	3600 x 2125 x 150
UNIT 26	2125 x 1925 x 150

Solar Decathlon Europe

Project: ORCHID HOUSE

Institution: 國立交通大學 National Chiao Tung University

NCTU Architecture 國立交通大學建築研究所

Team Name: NCTU/UNICODE

Address: 1001 Ta-Hsueh Road
Hsinchu City 30010
Taiwan

Contact: www.sde.tw

Consultants: RUENTEX CONSTRUCTION GROUP

Note:

Mark	Date	Description
DN	2013/04/01	SD Submission
DN	2013/07/01	DDc Submission
ST	2013/11/01	DD Submission
ST	2014/03/03	CD Submission
ST	2014/04/30	CD Submission
ST	2014/06/02	CD Submission

Drawn by	ST
Checked by	BT
Scale	1:100
Unit	mm

DWG. Title: STRUCTURAL FLOOR UNITS

DWG. No. ST-002

PAGE 135

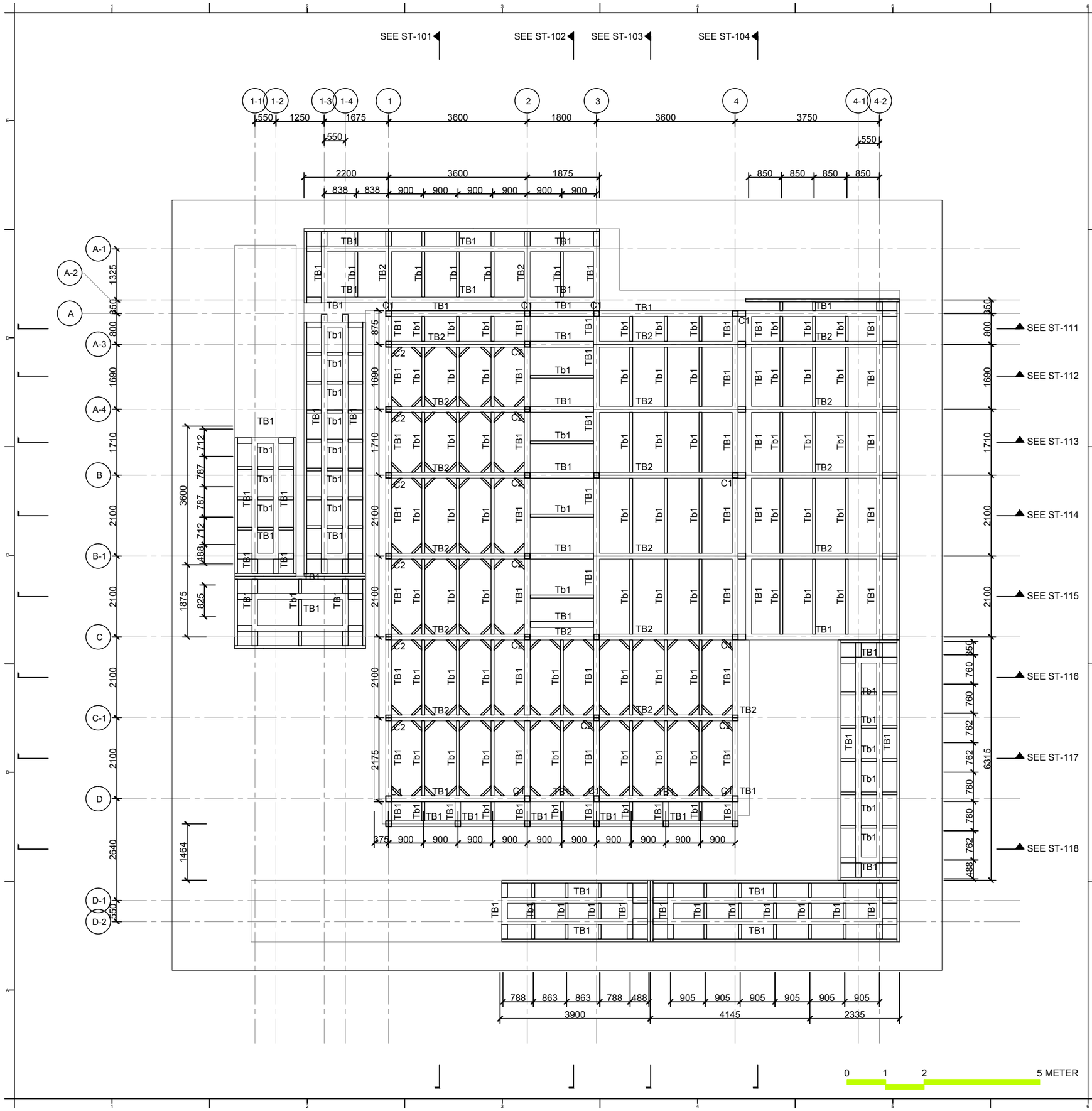

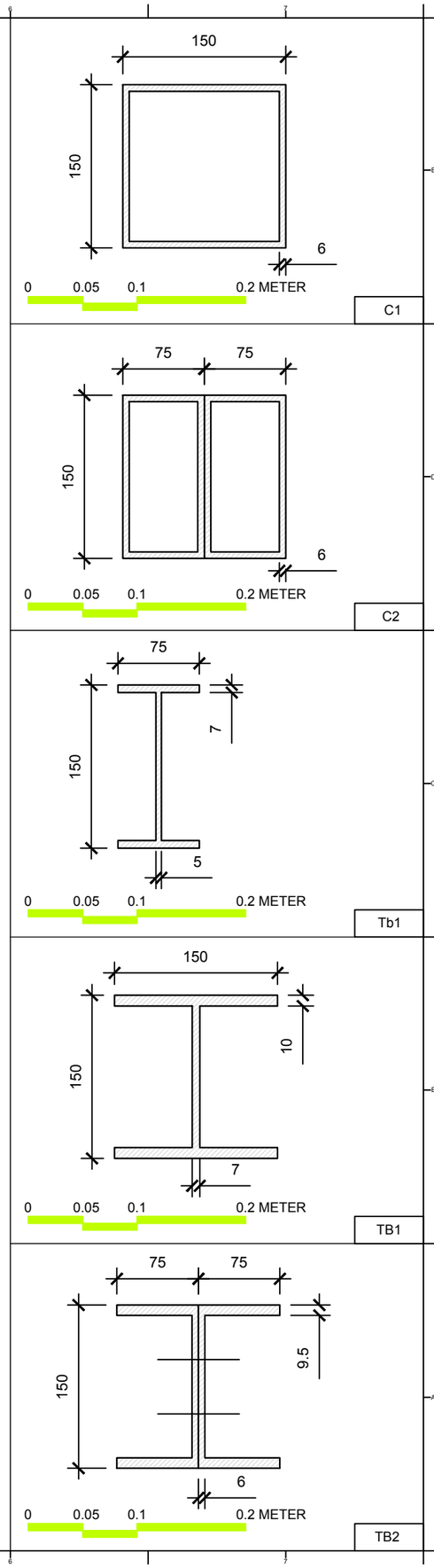

Solar Decathlon Europe

Project: ORCHID HOUSE

Institution: 國立交通大學 National Chiao Tung University

NCTU Architecture 國立交通大學建築研究所

Team Name:	NCTU/UNICODE
Address:	1001 Ta-Hsueh Road Hsinchu City 30010 Taiwan
Contact:	www.sde.tw

Consultants: RUENTEX CONSTRUCTION GROUP

Note:

Mark	Date	Description
DN	2013/04/01	SD Submission
DN	2013/07/01	DDc Submission
ST	2013/11/01	DD Submission
ST	2014/03/03	CD Submission
ST	2014/04/30	CD Submission
ST	2014/06/02	CD Submission

Drawn by	ST
Checked by	BT
Scale	1:100
Unit	mm

DWG. Title

STRUCTURAL GROUND LEVEL PLAN

DWG. No.	PAGE
ST-011	136

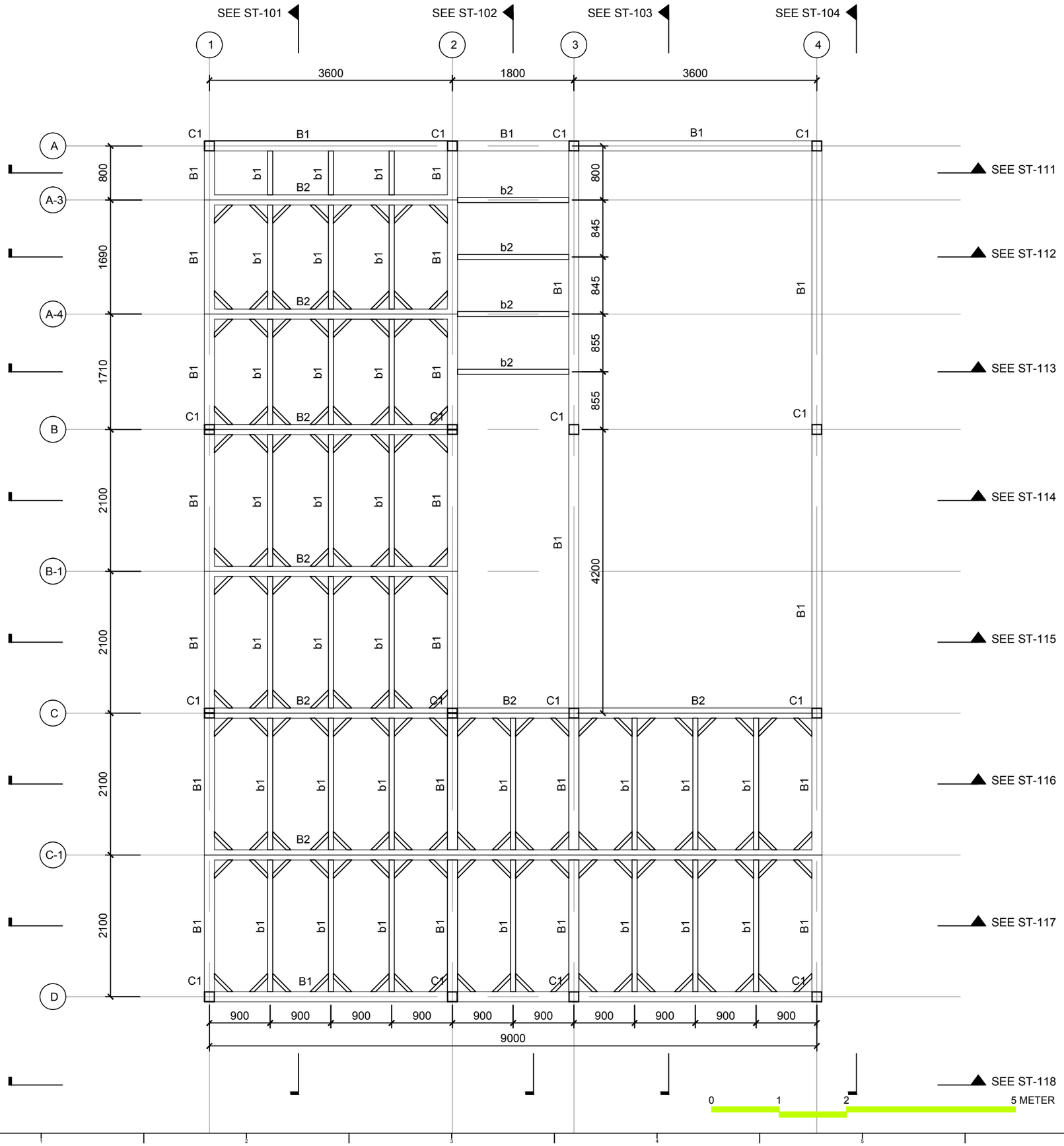

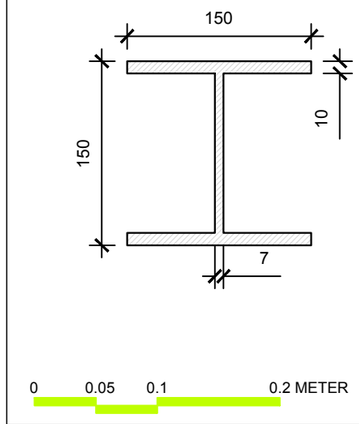

B1

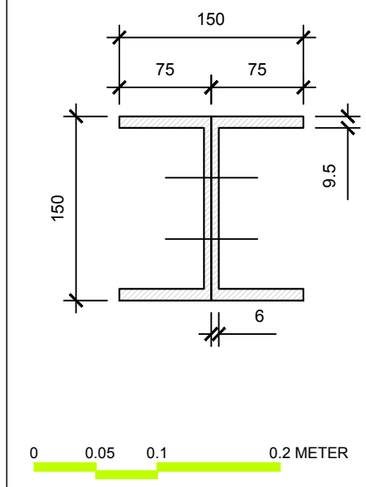

B2

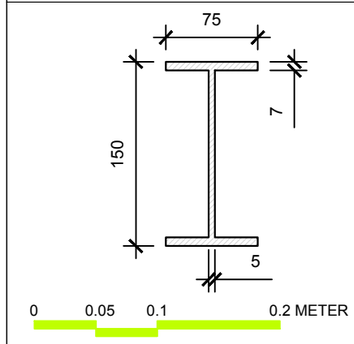

b1

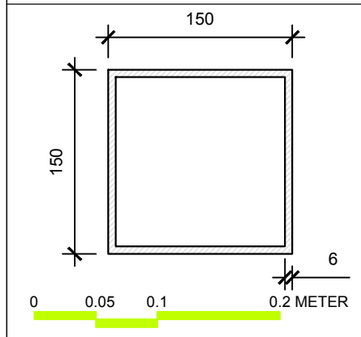

C1

Solar Decathlon Europe

Project: ORCHID HOUSE

Institution: 國立交通大學 National Chiao Tung University

NCTU Architecture 國立交通大學建築研究所

Team Name: NCTU/UNICODE

Address: 1001 Ta-Hsueh Road, Hsinchu City 30010, Taiwan

Contact: www.sde.tw

Consultants: RUENTEX CONSTRUCTION GROUP

Note:

Mark	Date	Description
DN	2013/04/01	SD Submission
DN	2013/07/01	DDc Submission
ST	2013/11/01	DD Submission
ST	2014/03/03	CD Submission
ST	2014/04/30	CD Submission
ST	2014/06/02	CD Submission

Drawn by	ST
Checked by	BT
Scale	1:60
Unit	mm

DWG. Title: STRUCTURAL MEZZANINE LEVEL PLAN

DWG. No. ST-012

PAGE 137

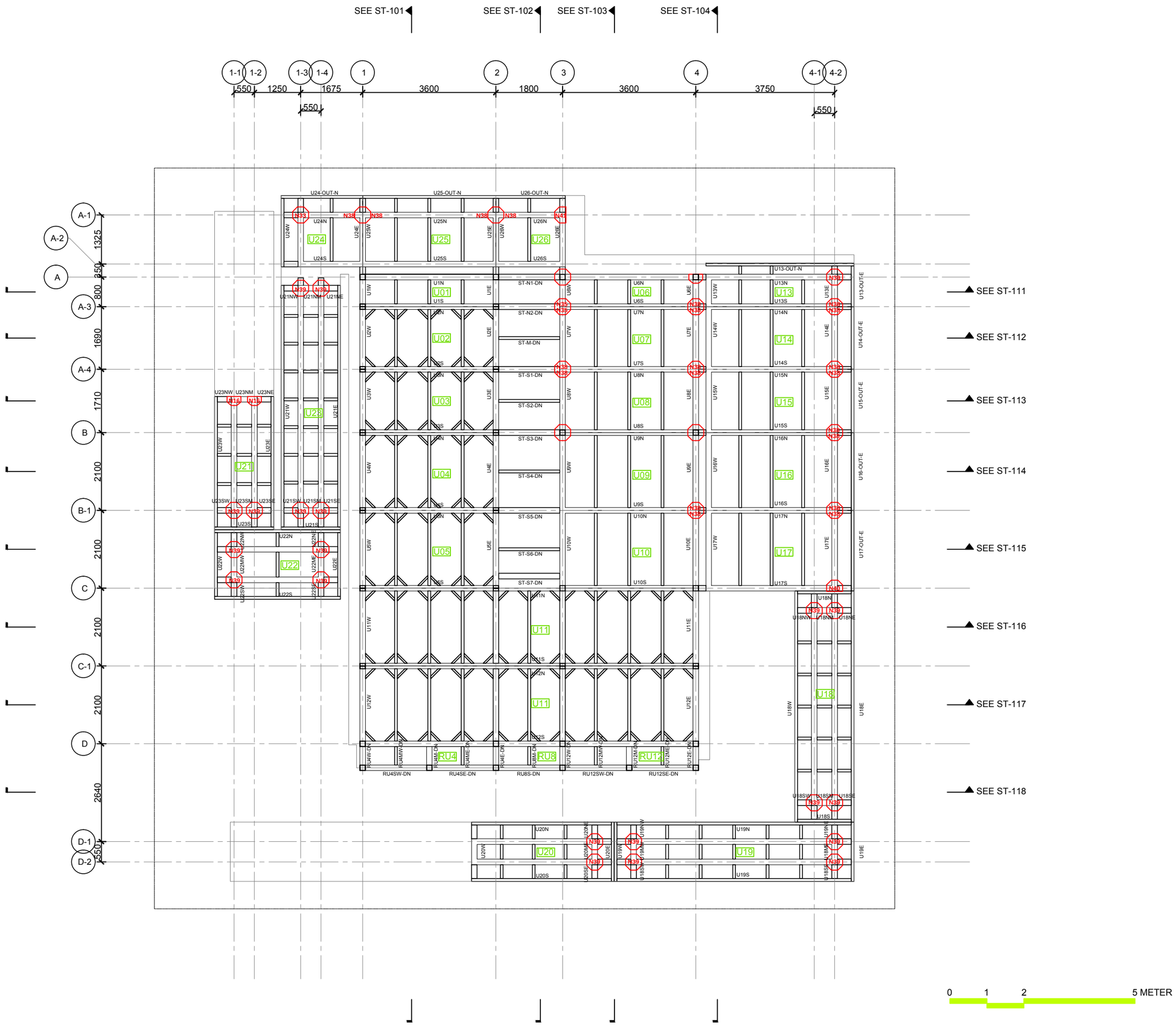

Solar Decathlon Europe

Project: ORCHID HOUSE

Institution: 國立交通大學 National Chiao Tung University

NCTU Architecture 國立交通大學建築研究所

Team Name: NCTU/UNICODE

Address: 1001 Ta-Hsueh Road Hsinchu City 30010 Taiwan

Contact: www.sde.tw

Consultants: RUENTEX CONSTRUCTION GROUP

Note:

Mark	Date	Description
DN	2013/04/01	SD Submission
DN	2013/07/01	DDc Submission
ST	2013/11/01	DD Submission
ST	2014/03/03	CD Submission
ST	2014/04/30	CD Submission
ST	2014/06/02	CD Submission

Drawn by	CF
Checked by	BT
Scale	1:100
Unit	mm

DWG. Title: STRUCTURAL ELEMENTS MARKING GROUND LEVEL PLAN

DWG. No. ST-013

PAGE 138

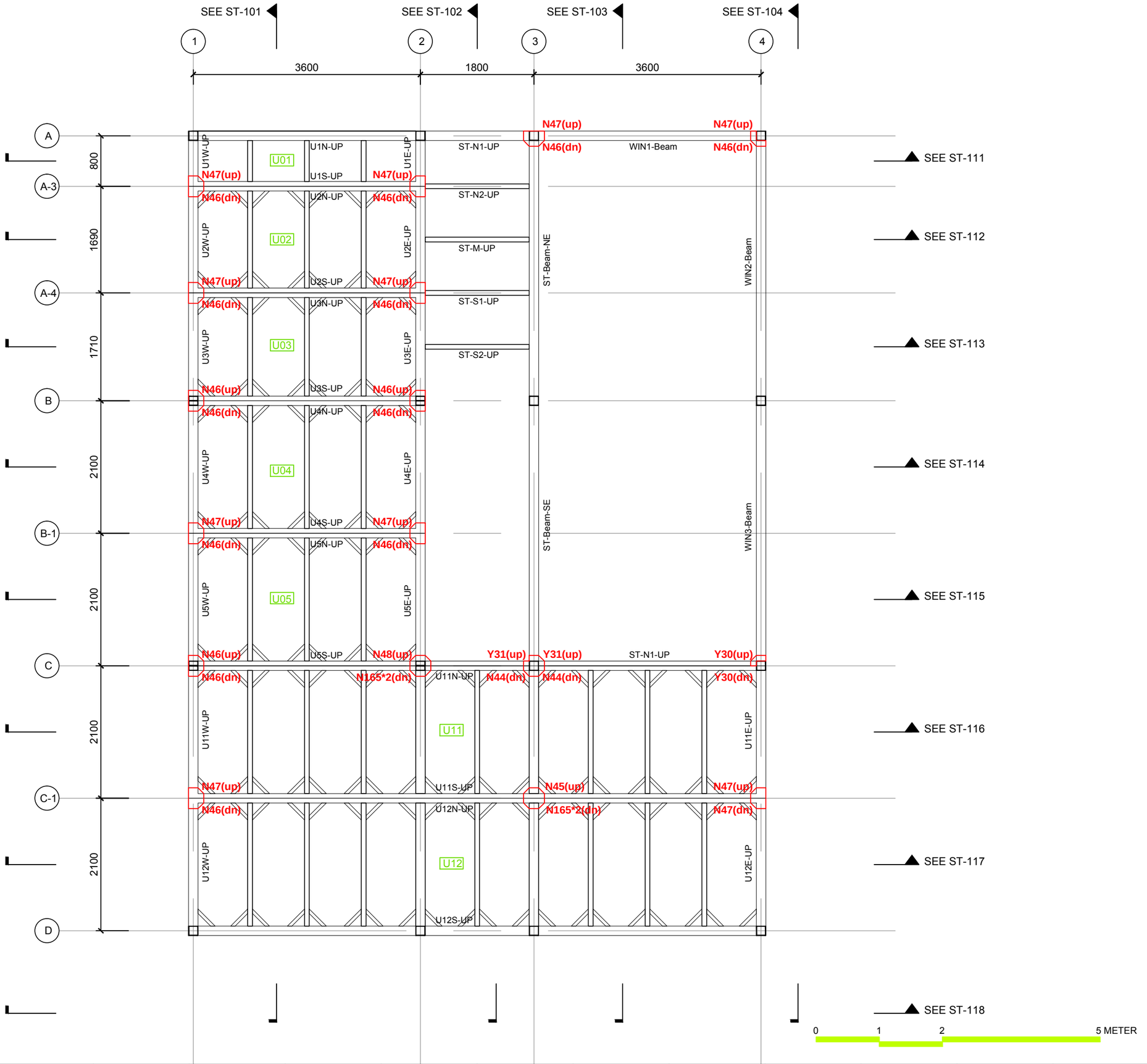

Solar Decathlon Europe

Project: ORCHID HOUSE

Institution: 國立交通大學 National Chiao Tung University

NCTU Architecture 國立交通大學建築研究所

Team Name: NCTU/UNICODE

Address: 1001 Ta-Hsueh Road
Hsinchu City 30010
Taiwan

Contact: www.sde.tw

Consultants: RUENTEX CONSTRUCTION GROUP

Note:

Mark	Date	Description
DN	2013/04/01	SD Submission
DN	2013/07/01	DDc Submission
ST	2013/11/01	DD Submission
ST	2014/03/03	CD Submission
ST	2014/04/30	CD Submission
ST	2014/06/02	CD Submission

Drawn by	CF
Checked by	BT
Scale	1:60
Unit	mm

DWG. Title
STRUCTURAL ELEMENTS MARKING
MEZZANINE LEVEL PLAN

DWG. No. ST-014

PAGE 139

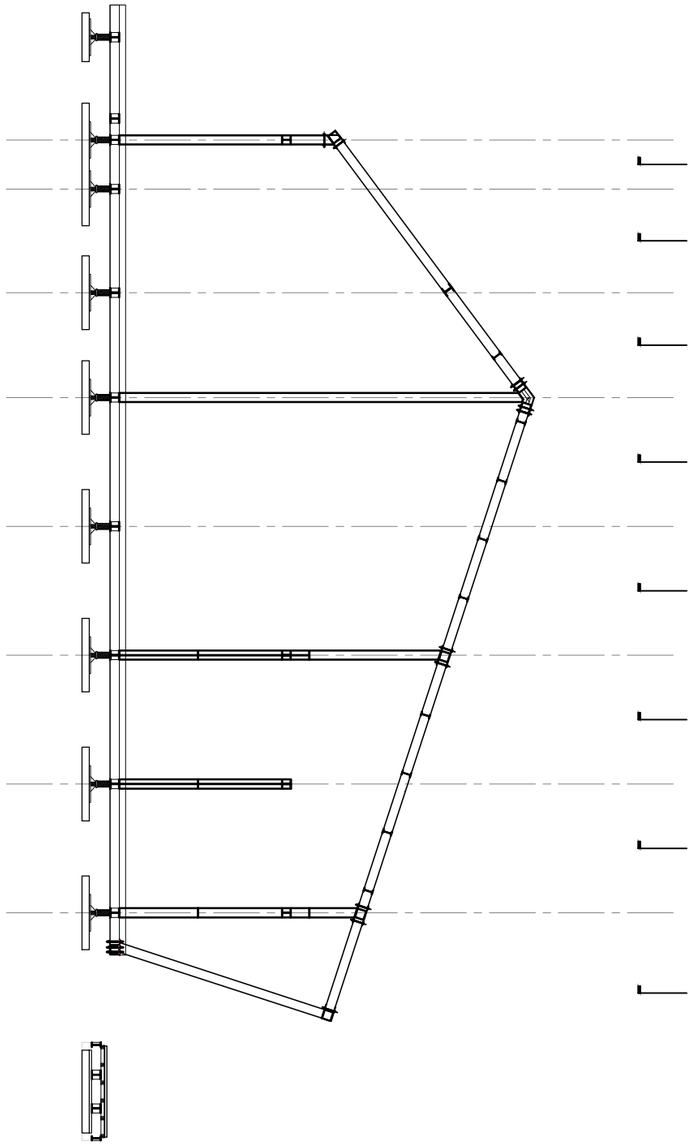

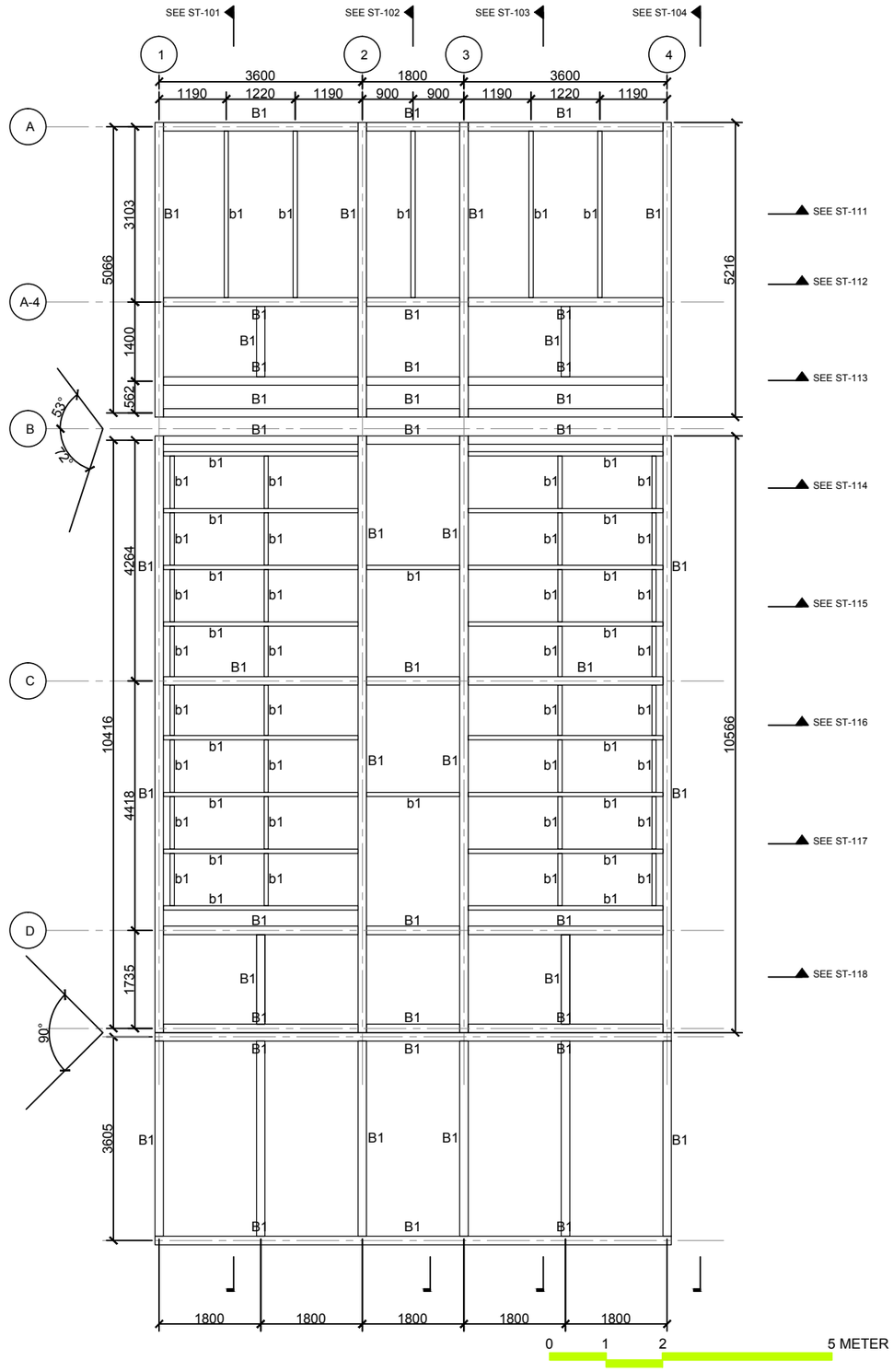

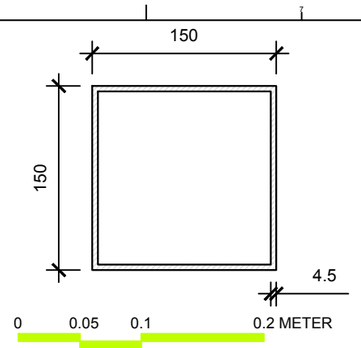

B1

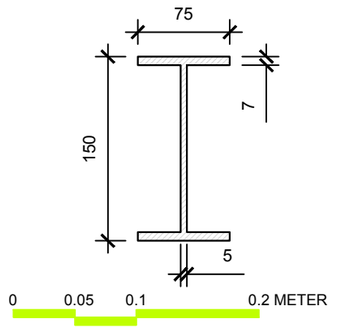

b1

Solar Decathlon Europe

Project: ORCHID HOUSE

Institution: 國立交通大學 National Chiao Tung University

NCTU Architecture 國立交通大學建築研究所

Team Name: NCTU/UNICODE

Address: 1001 Ta-Hsueh Road Hsinchu City 30010 Taiwan

Contact: www.sde.tw

Consultants: RUENTEX CONSTRUCTION GROUP

Note:

Mark	Date	Description
DN	2013/04/01	SD Submission
DN	2013/07/01	DDc Submission
ST	2013/11/01	DD Submission
ST	2014/03/03	CD Submission
ST	2014/04/30	CD Submission
ST	2014/06/02	CD Submission

Drawn by	ST
Checked by	BT
Scale	1:100
Unit	mm

DWG. Title: STRUCTURAL ROOF PLAN

DWG. No. ST-021

PAGE 140

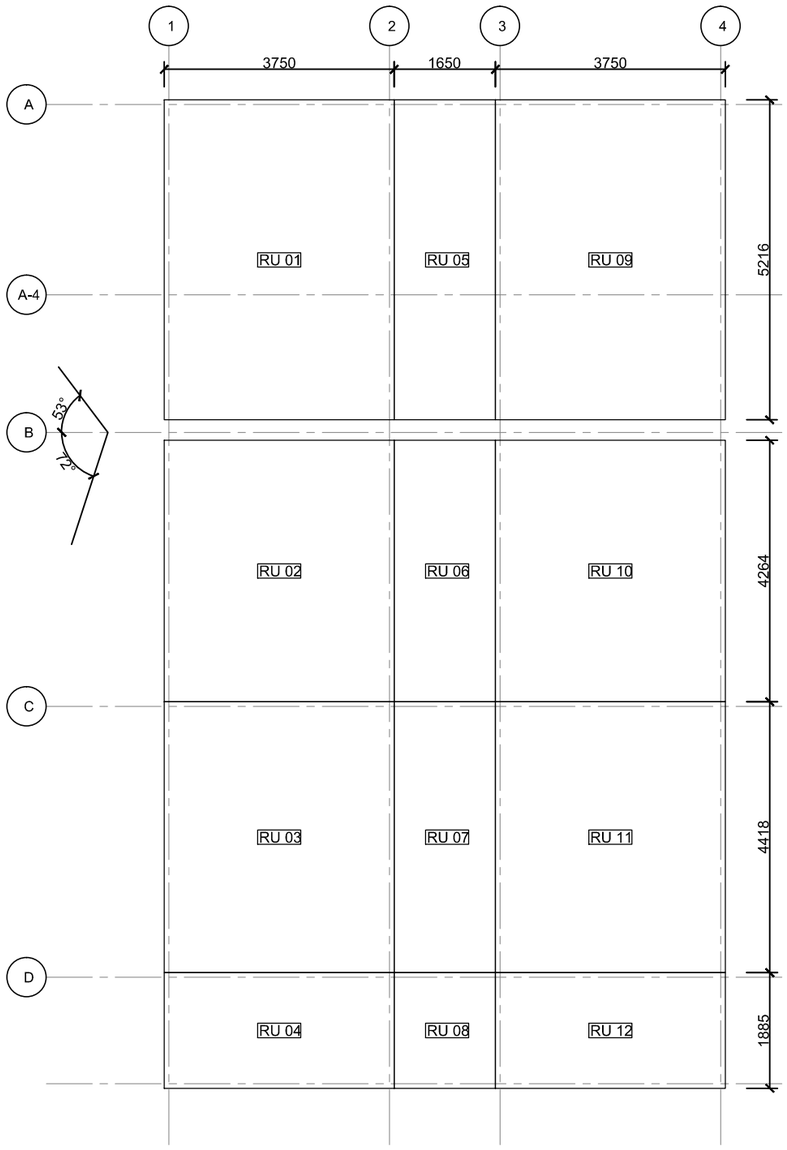

UNIT No.	SIZE (L x W x D)
RU 01	5216 x 3750 x 150
RU 02	4264 x 3750 x 150
RU 03	4418 x 3750 x 150
RU 04	1885 x 3750 x 150
RU 01	5216 x 1650 x 150
RU 01	4264 x 1650 x 150
RU 01	4418 x 1650 x 150
RU 01	1885 x 1650 x 150
RU 01	5216 x 3750 x 150
RU 01	4264 x 3750 x 150
RU 01	4418 x 3750 x 150
RU 01	1885 x 3750 x 150

0 1 2 5 METER

Solar Decathlon Europe

Project: ORCHID HOUSE

Institution: 國立交通大學 National Chiao Tung University

NCTU Architecture 國立交通大學建築研究所

Team Name: NCTU/UNICODE

Address: 1001 Ta-Hsueh Road
Hsinchu City 30010
Taiwan

Contact: www.sde.tw

Consultants: RUENTEX CONSTRUCTION GROUP

Note:

Mark	Date	Description
DN	2013/04/01	SD Submission
DN	2013/07/01	DDc Submission
ST	2013/11/01	DD Submission
ST	2014/03/03	CD Submission
ST	2014/04/30	CD Submission
ST	2014/06/02	CD Submission

Drawn by	CF
Checked by	BT
Scale	1:100
Unit	mm

DWG. Title

STRUCTURAL ROOF UNITS

DWG. No. ST-022

PAGE 141

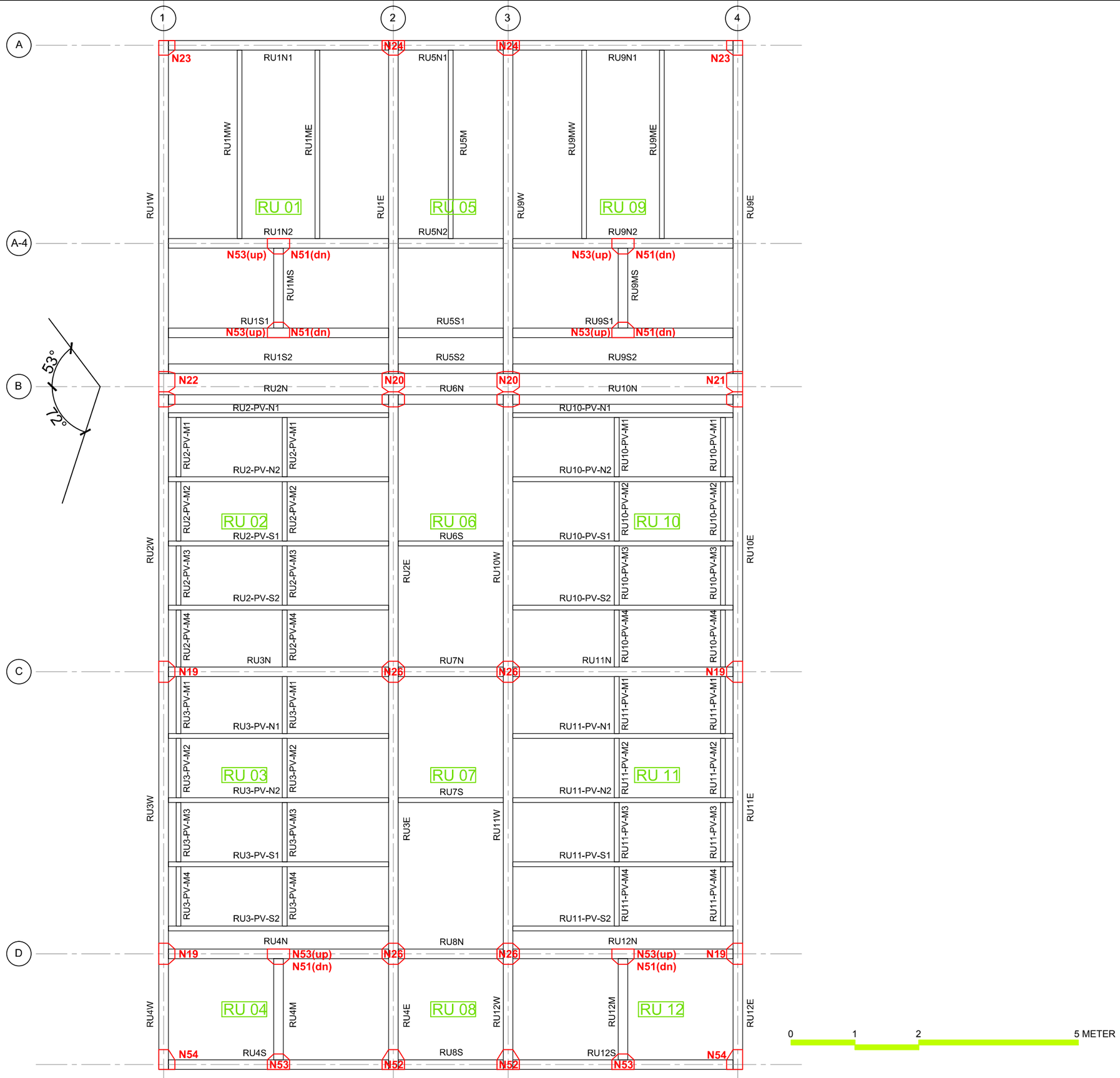

Solar Decathlon Europe

Project:

ORCHID HOUSE

Institution:

國立交通大學 National Chiao Tung University

NCTU Architecture 國立交通大學建築研究所

Team Name: NCTU/UNICODE

Address: 1001 Ta-Hsueh Road
Hsinchu City 30010
Taiwan

Contact: www.sde.tw

Consultants:

RUENTEX CONSTRUCTION GROUP

Note:

N

Mark	Date	Description
DN	2013/04/01	SD Submission
DN	2013/07/01	DDc Submission
ST	2013/11/01	DD Submission
ST	2014/03/03	CD Submission
ST	2014/04/30	CD Submission
ST	2014/06/02	CD Submission

Drawn by	CF
Checked by	BT
Scale	1:60
Unit	mm

DWG. Title

STRUCTURAL ELEMENTS MARKING ROOF PLAN

DWG. No. ST-023

PAGE 142

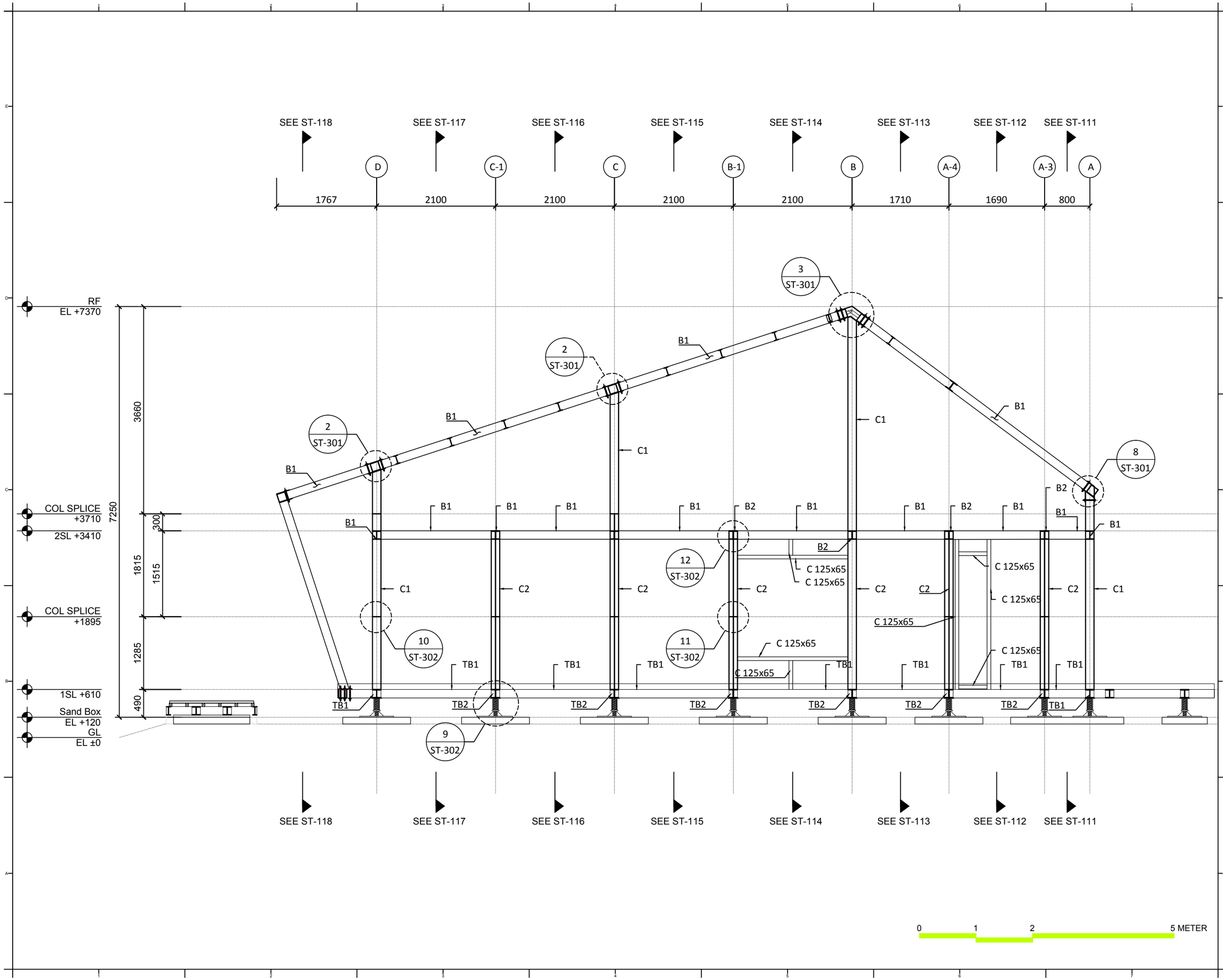

Solar Decathlon Europe

Project: ORCHID HOUSE

Institution: 國立交通大學 National Chiao Tung University

NCTU Architecture 國立交通大學建築研究所

Team Name: NCTU/UNICODE

Address: 1001 Ta-Hsueh Road
Hsinchu City 30010
Taiwan

Contact: www.sde.tw

Consultants: RUENTEX CONSTRUCTION GROUP

Note:

Mark	Date	Description
DN	2013/04/01	SD Submission
DN	2013/07/01	DDc Submission
ST	2013/11/01	DD Submission
ST	2014/03/03	CD Submission
ST	2014/04/30	CD Submission
ST	2014/06/02	CD Submission

Drawn by	ST
Checked by	BT
Scale	1:60
Unit	mm

DWG. Title
STRUCTURAL LONGITUDINAL SECTIONS FRAME 1

DWG. No. ST-101

PAGE 143

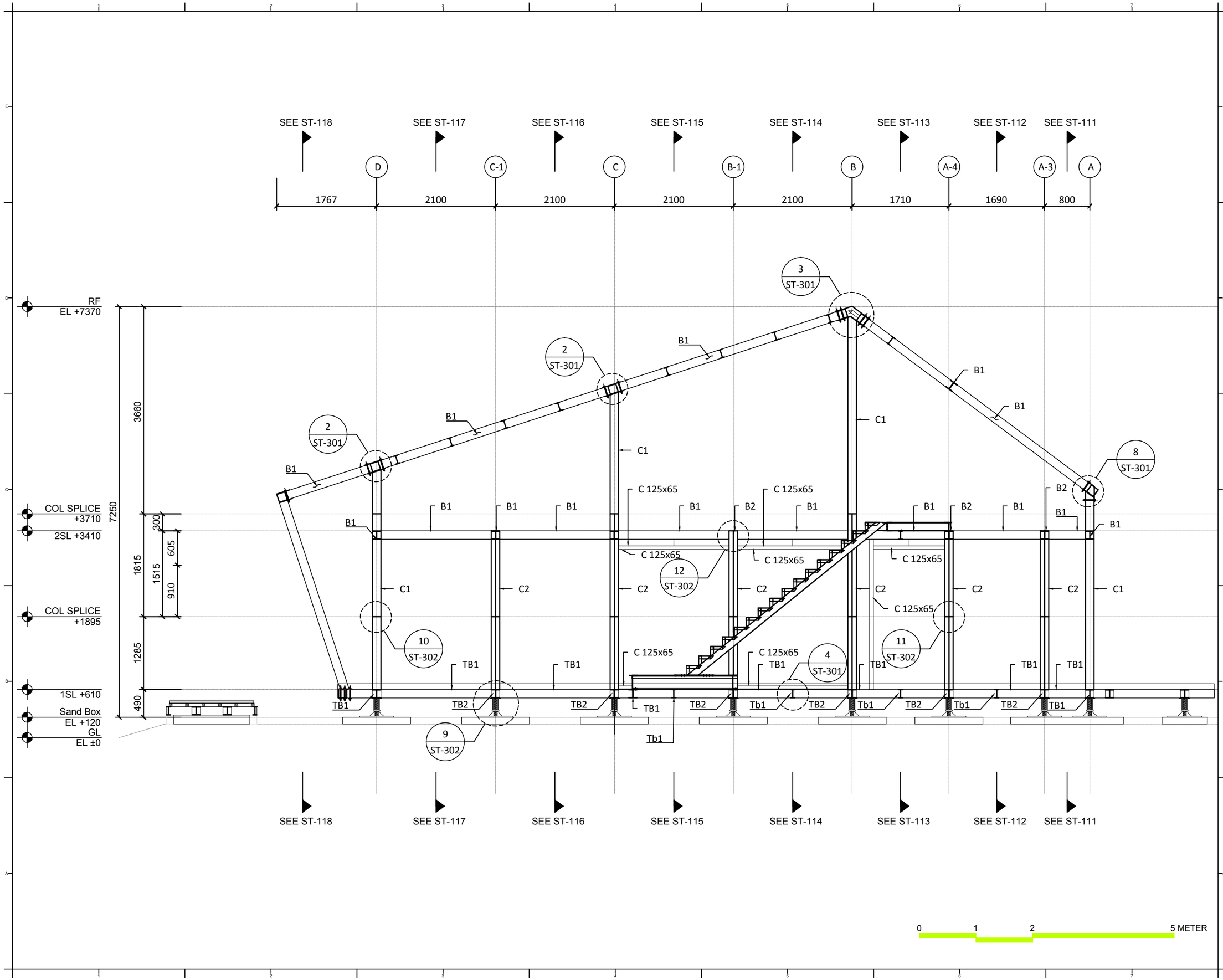

Solar Decathlon Europe

Project:

ORCHID HOUSE

Institution:

國立交通大學
National Chiao Tung University

NCTU Architecture
國立交通大學建築研究所

Team Name: NCTU/UNICODE

Address: 1001 Ta-Hsueh Road
Hsinchu City 30010
Taiwan

Contact: www.sde.tw

Consultants:

RUENTEX CONSTRUCTION GROUP

Note:

Mark	Date	Description
DN	2013/04/01	SD Submission
DN	2013/07/01	DDc Submission
ST	2013/11/01	DD Submission
ST	2014/03/03	CD Submission
ST	2014/04/30	CD Submission
ST	2014/06/02	CD Submission

Drawn by	ST
Checked by	BT
Scale	1:60
Unit	mm

DWG. Title

STRUCTURAL
LONGITUDINAL SECTIONS
FRAME 2

DWG. No. ST-102

PAGE 144

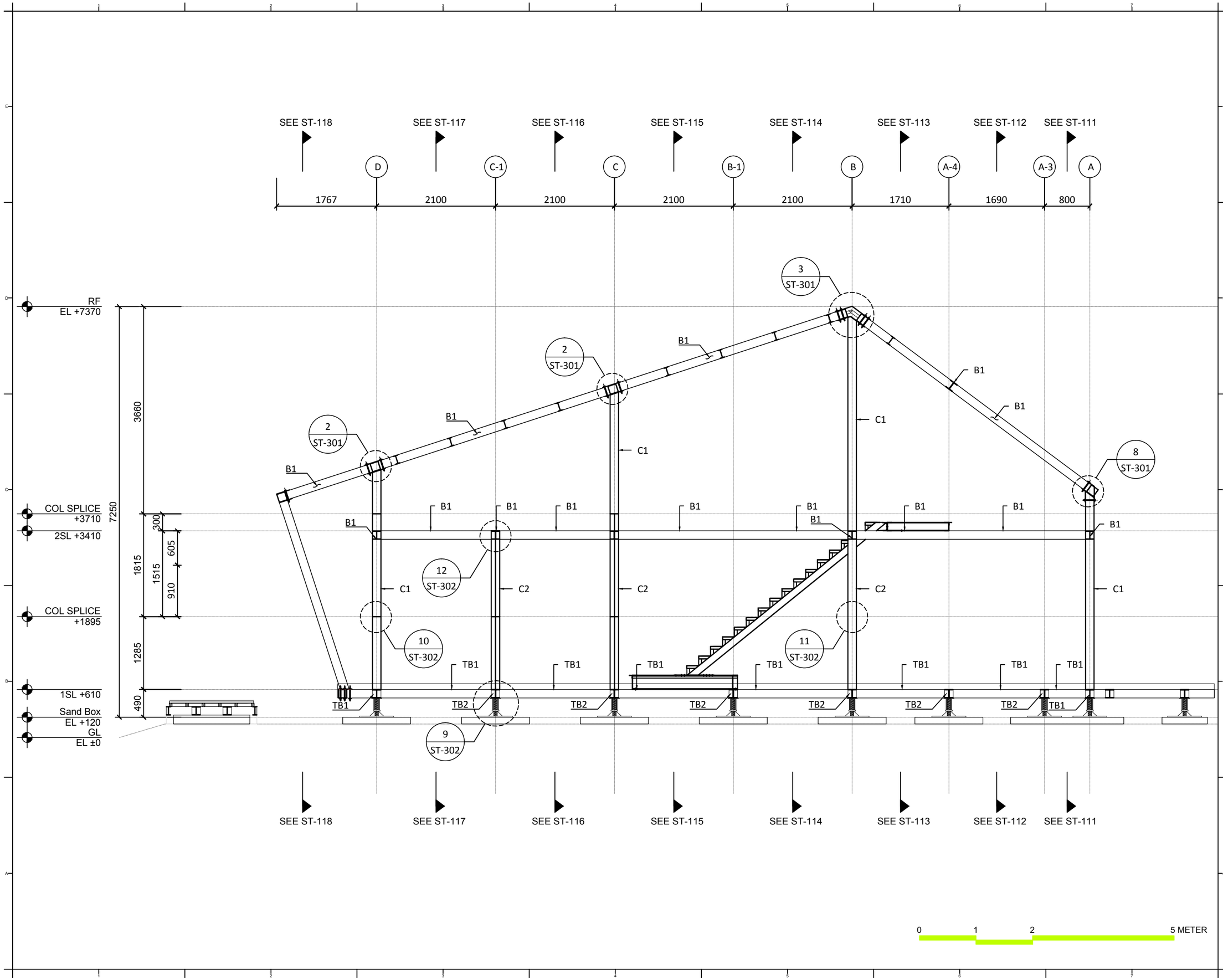

Solar Decathlon Europe

Project:

ORCHID HOUSE

Institution:

國立交通大學
National Chiao Tung University

NCTU Architecture
國立交通大學建築研究所

Team Name: NCTU/UNICODE

Address: 1001 Ta-Hsueh Road
Hsinchu City 30010
Taiwan

Contact: www.sde.tw

Consultants:

RUENTEX CONSTRUCTION GROUP

Note:

Mark	Date	Description
DN	2013/04/01	SD Submission
DN	2013/07/01	DDc Submission
ST	2013/11/01	DD Submission
ST	2014/03/03	CD Submission
ST	2014/04/30	CD Submission
ST	2014/06/02	CD Submission

Drawn by	ST
Checked by	DN
Scale	1:60
Unit	mm

DWG. Title

STRUCTURAL
LONGITUDINAL SECTIONS
FRAME 3

DWG. No. ST-103

PAGE 145

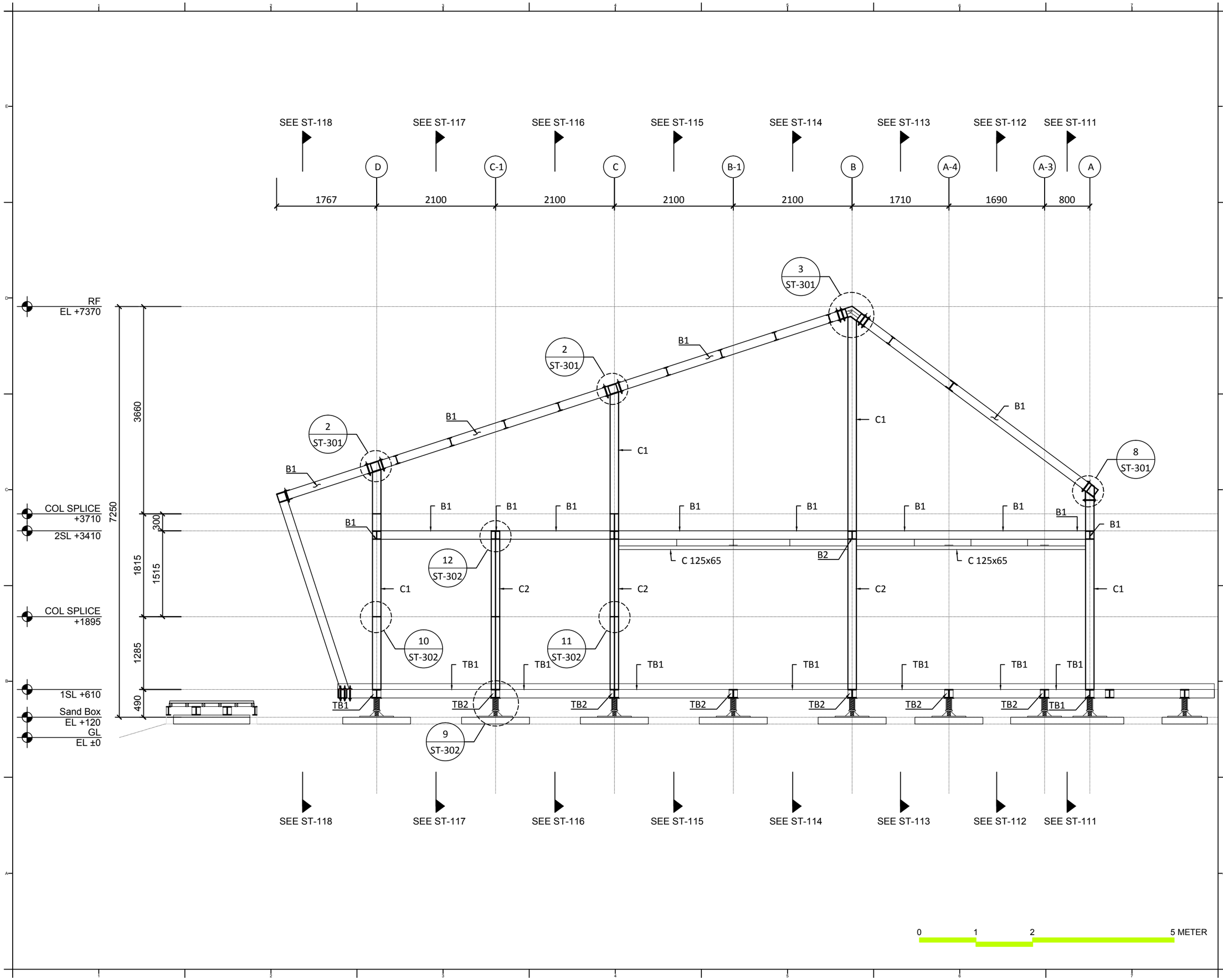

Solar Decathlon Europe

Project: ORCHID HOUSE

Institution: 國立交通大學 National Chiao Tung University

NCTU Architecture 國立交通大學建築研究所

Team Name: NCTU/UNICODE

Address: 1001 Ta-Hsueh Road
Hsinchu City 30010
Taiwan

Contact: www.sde.tw

Consultants: RUENTEX CONSTRUCTION GROUP

Note:

Mark	Date	Description
DN	2013/04/01	SD Submission
DN	2013/07/01	DDc Submission
ST	2013/11/01	DD Submission
ST	2014/03/03	CD Submission
ST	2014/04/30	CD Submission
ST	2014/06/02	CD Submission

Drawn by	ST
Checked by	DN
Scale	1:60
Unit	mm

DWG. Title
STRUCTURAL
LONGITUDINAL SECTIONS
FRAME 4

DWG. No. ST-104

PAGE 146

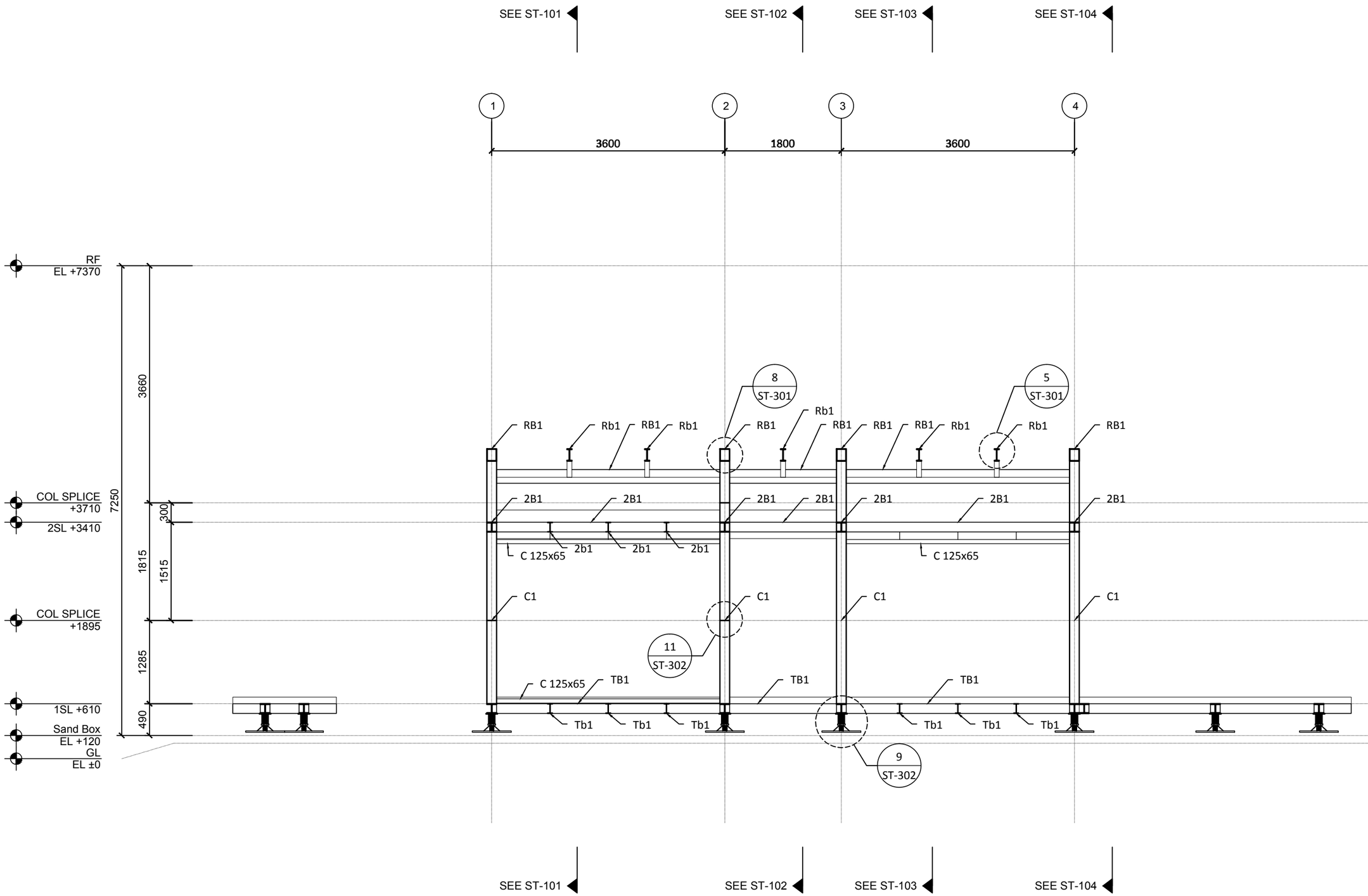

0 1 2 5 METER

Solar Decathlon Europe

Project: ORCHID HOUSE

Institution: 國立交通大學 National Chiao Tung University

NCTU Architecture 國立交通大學建築研究所

Team Name: NCTU/UNICODE

Address: 1001 Ta-Hsueh Road
Hsinchu City 30010
Taiwan

Contact: www.sde.tw

Consultants: RUENTEX CONSTRUCTION GROUP

Note:

Mark	Date	Description
DN	2013/04/01	SD Submission
DN	2013/07/01	DDc Submission
ST	2013/11/01	DD Submission
ST	2014/03/03	CD Submission
ST	2014/04/30	CD Submission
ST	2014/06/02	CD Submission

Drawn by	ST
Checked by	BT
Scale	1:60
Unit	mm

DWG. Title: STRUCTURAL TRANSVERSAL SECTIONS FRAME A

DWG. No. ST-111

PAGE 147

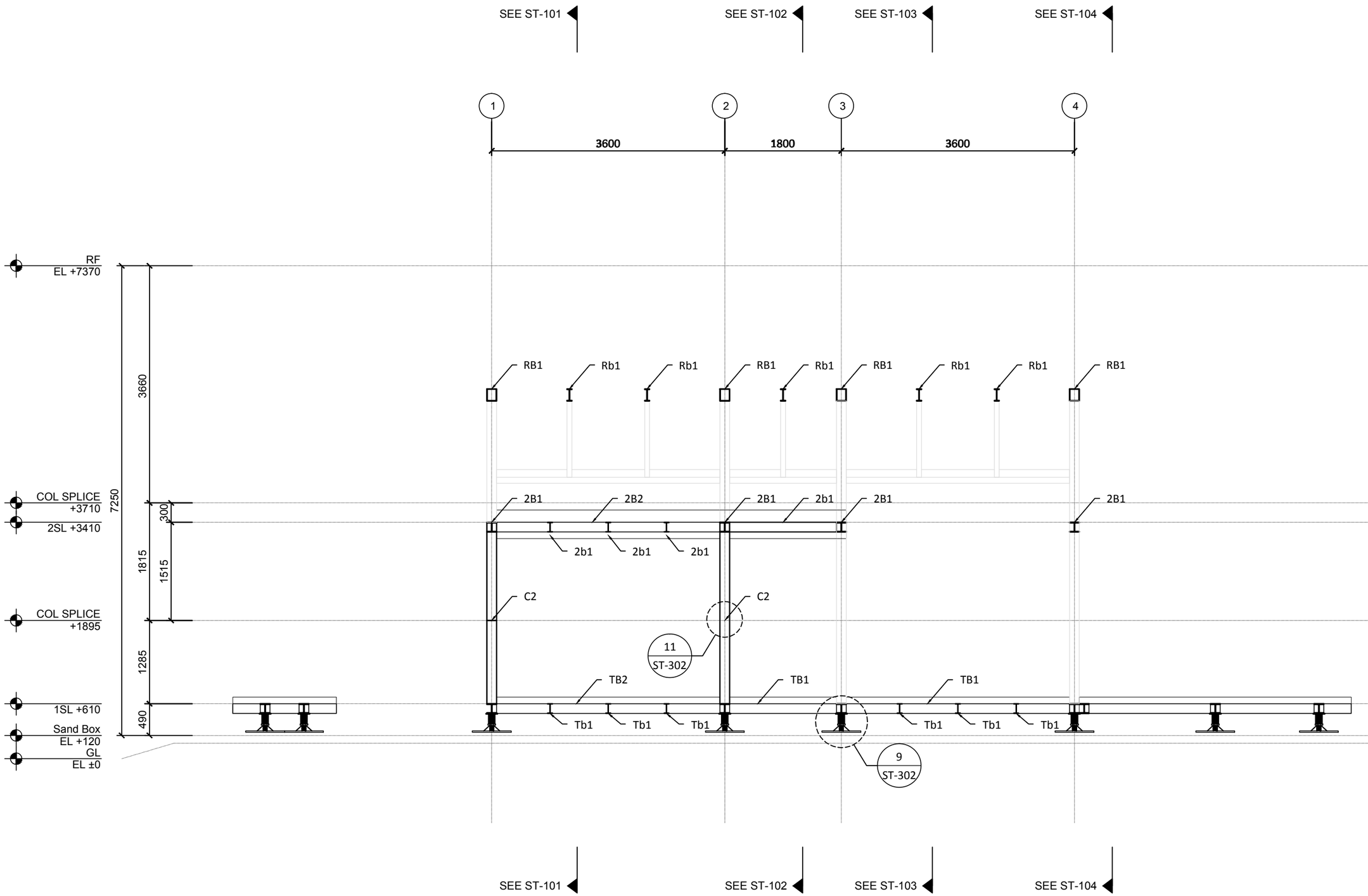

0 1 2 5 METER

Solar Decathlon Europe

Project: ORCHID HOUSE

Institution: 國立交通大學 National Chiao Tung University

NCTU Architecture 國立交通大學建築研究所

Team Name: NCTU/UNICODE

Address: 1001 Ta-Hsueh Road
Hsinchu City 30010
Taiwan

Contact: www.sde.tw

Consultants: RUENTEX CONSTRUCTION GROUP

Note:

Mark	Date	Description
DN	2013/04/01	SD Submission
DN	2013/07/01	DDc Submission
ST	2013/11/01	DD Submission
ST	2014/03/03	CD Submission
ST	2014/04/30	CD Submission
ST	2014/06/02	CD Submission

Drawn by	ST
Checked by	BT
Scale	1:60
Unit	mm

DWG. Title
STRUCTURAL TRANSVERSAL SECTIONS FRAME A-3

DWG. No. ST-112

PAGE 148

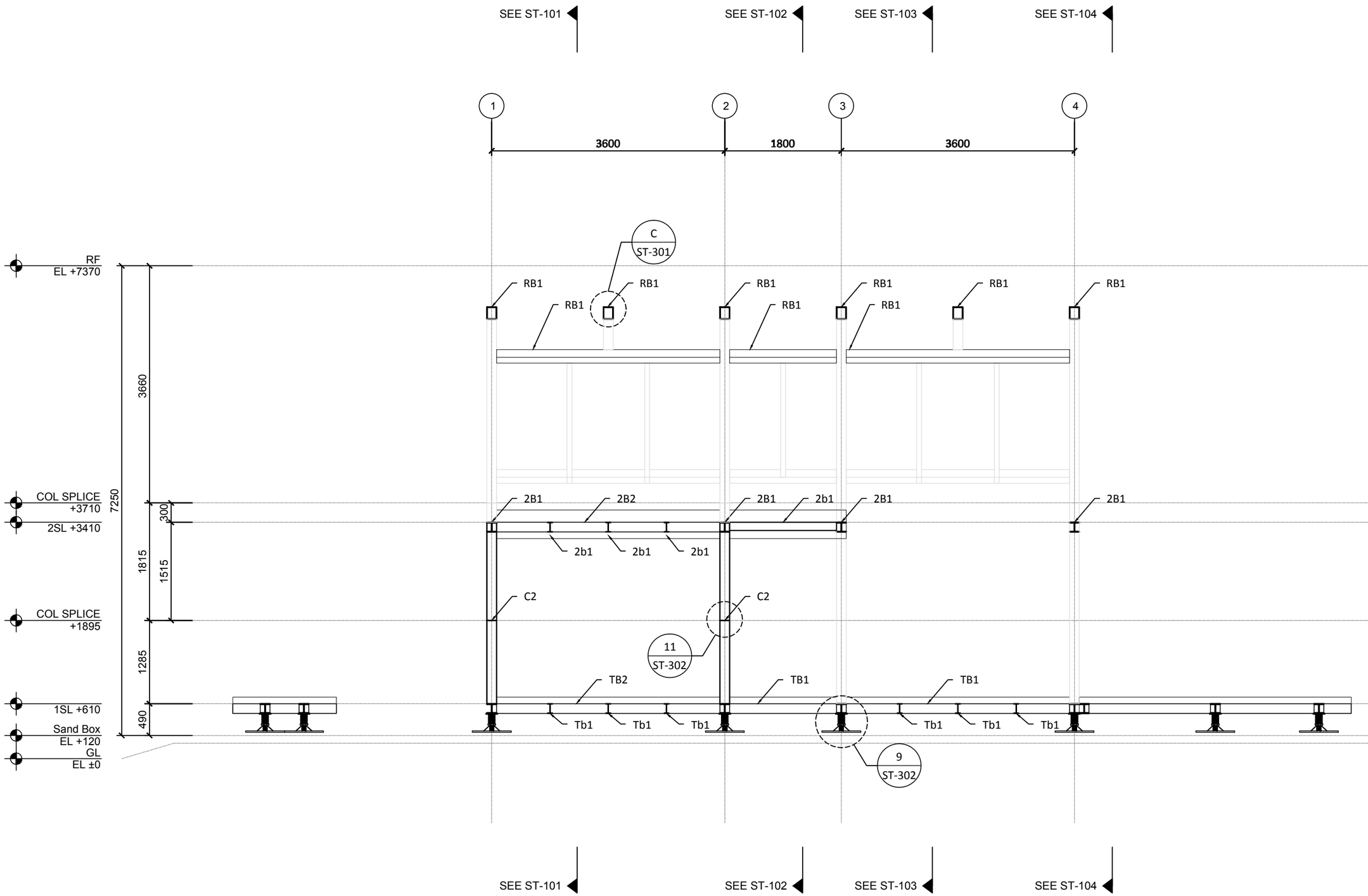

Solar Decathlon Europe

Project: ORCHID HOUSE

Institution: 國立交通大學 National Chiao Tung University

NCTU Architecture 國立交通大學建築研究所

Team Name: NCTU/UNICODE

Address: 1001 Ta-Hsueh Road
Hsinchu City 30010
Taiwan

Contact: www.sde.tw

Consultants: RUENTEX CONSTRUCTION GROUP

Note:

Mark	Date	Description
DN	2013/04/01	SD Submission
DN	2013/07/01	DDc Submission
ST	2013/11/01	DD Submission
ST	2014/03/03	CD Submission
ST	2014/04/30	CD Submission
ST	2014/06/02	CD Submission

Drawn by	ST
Checked by	BT
Scale	1:60
Unit	mm

DWG. Title: STRUCTURAL TRANSVERSAL SECTIONS FRAME A-4

DWG. No. ST-113

PAGE 149

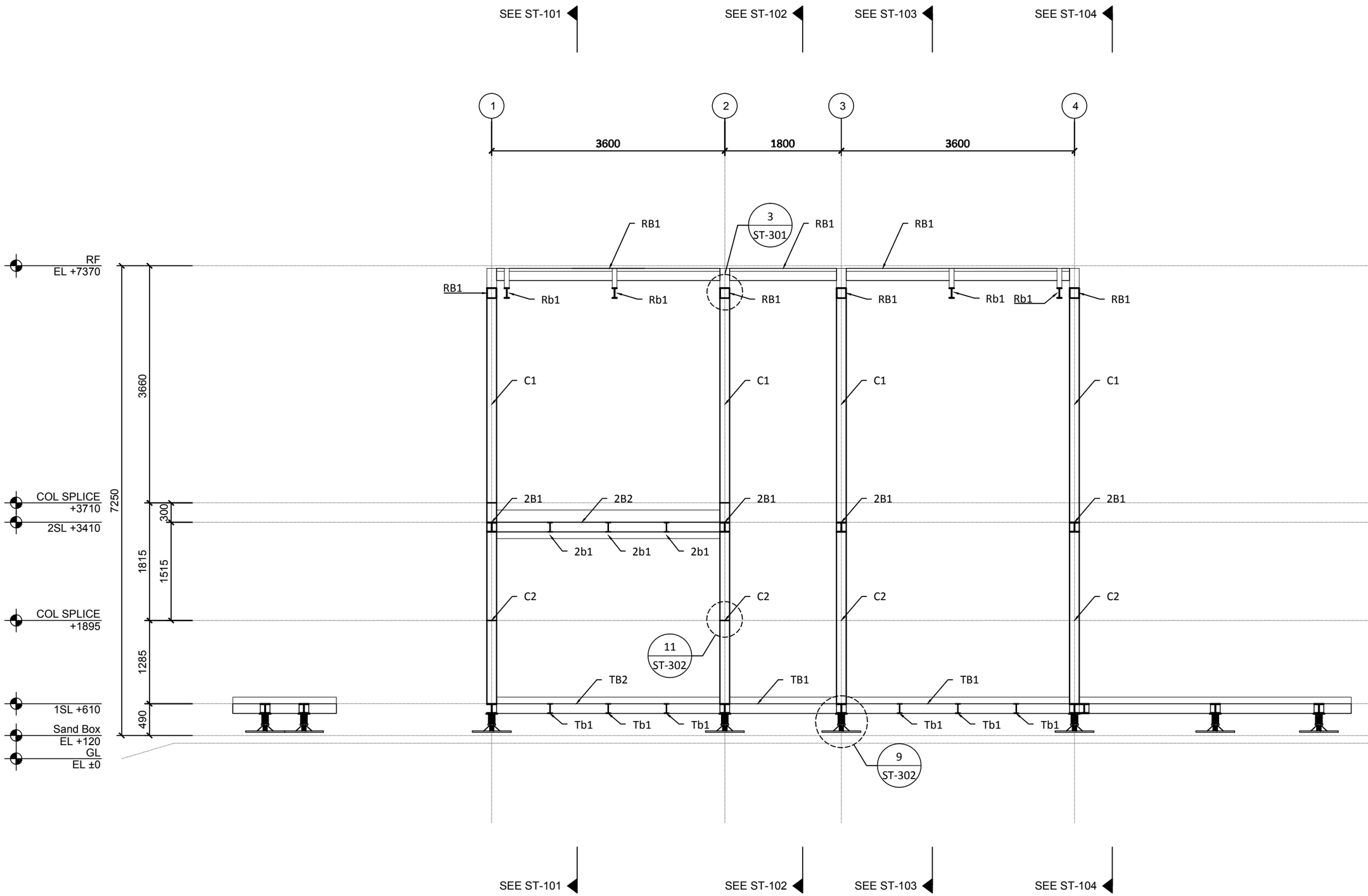

0 1 2 5 METER

Solar Decathlon Europe

Project: ORCHID HOUSE

Institution: 國立交通大學 National Chiao Tung University

NCTU Architecture 國立交通大學建築研究所

Team Name: NCTU/UNICODE

Address: 1001 Ta-Hsueh Road
Hsinchu City 30010
Taiwan

Contact: www.sde.tw

Consultants: RUENTEX CONSTRUCTION GROUP

Note:

Mark	Date	Description
DN	2013/04/01	SD Submission
DN	2013/07/01	DDc Submission
ST	2013/11/01	DD Submission
ST	2014/03/03	CD Submission
ST	2014/04/30	CD Submission
ST	2014/06/02	CD Submission

Drawn by	ST
Checked by	BT
Scale	1:60
Unit	mm

DWG. Title: STRUCTURAL TRANSVERSAL SECTIONS FRAME B

DWG. No. ST-114

PAGE 150

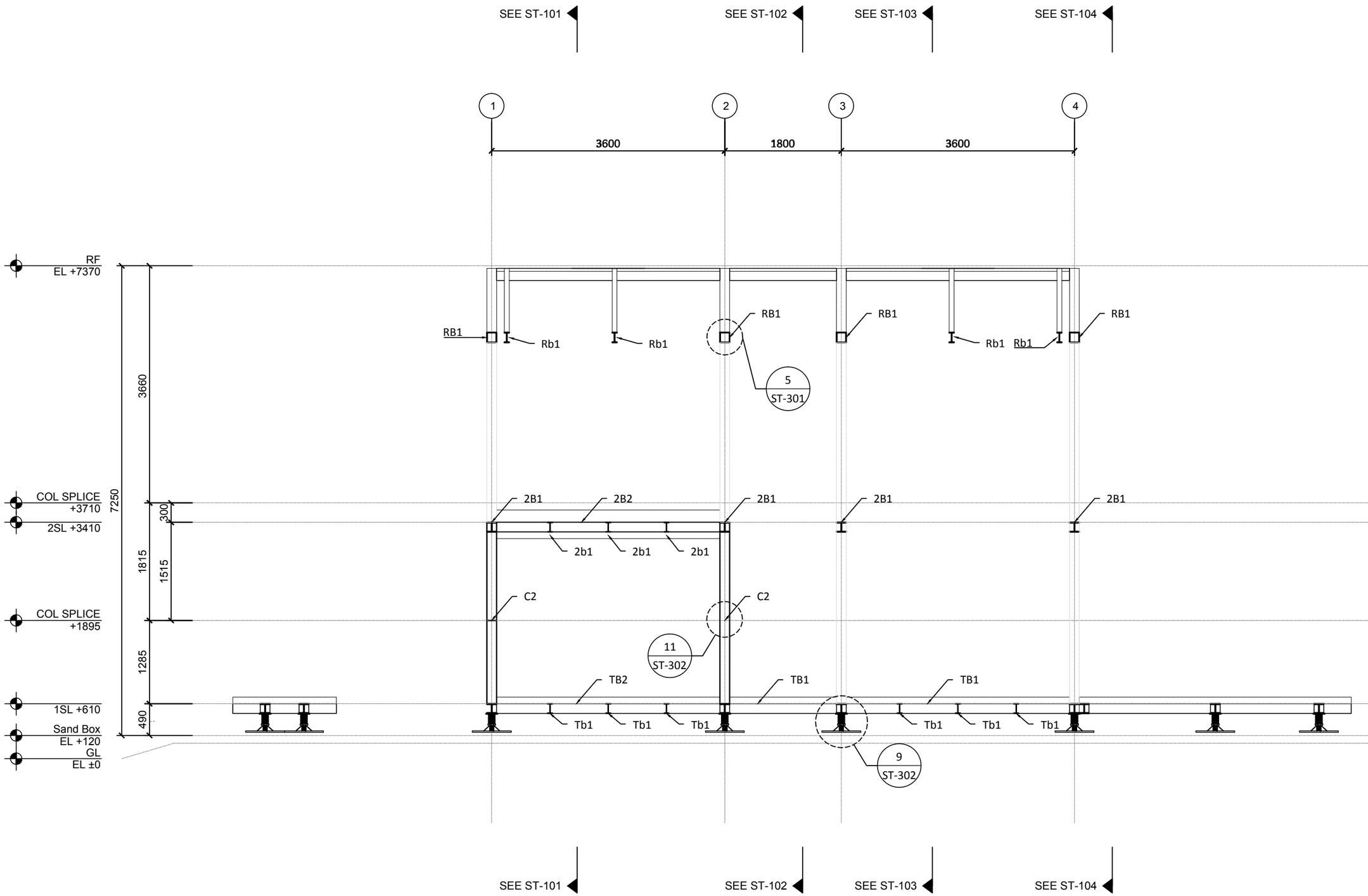

Solar Decathlon Europe

Project: ORCHID HOUSE

Institution: 國立交通大學 National Chiao Tung University

NCTU Architecture 國立交通大學建築研究所

Team Name: NCTU/UNICODE

Address: 1001 Ta-Hsueh Road
Hsinchu City 30010
Taiwan

Contact: www.sde.tw

Consultants: RUENTEX CONSTRUCTION GROUP

Note:

Mark	Date	Description
DN	2013/04/01	SD Submission
DN	2013/07/01	DDc Submission
ST	2013/11/01	DD Submission
ST	2014/03/03	CD Submission
ST	2014/04/30	CD Submission
ST	2014/06/02	CD Submission

Drawn by	ST
Checked by	BT
Scale	1:60
Unit	mm

DWG. Title

STRUCTURAL TRANSVERSAL SECTIONS FRAME B-1

DWG. No. ST-115

PAGE 151

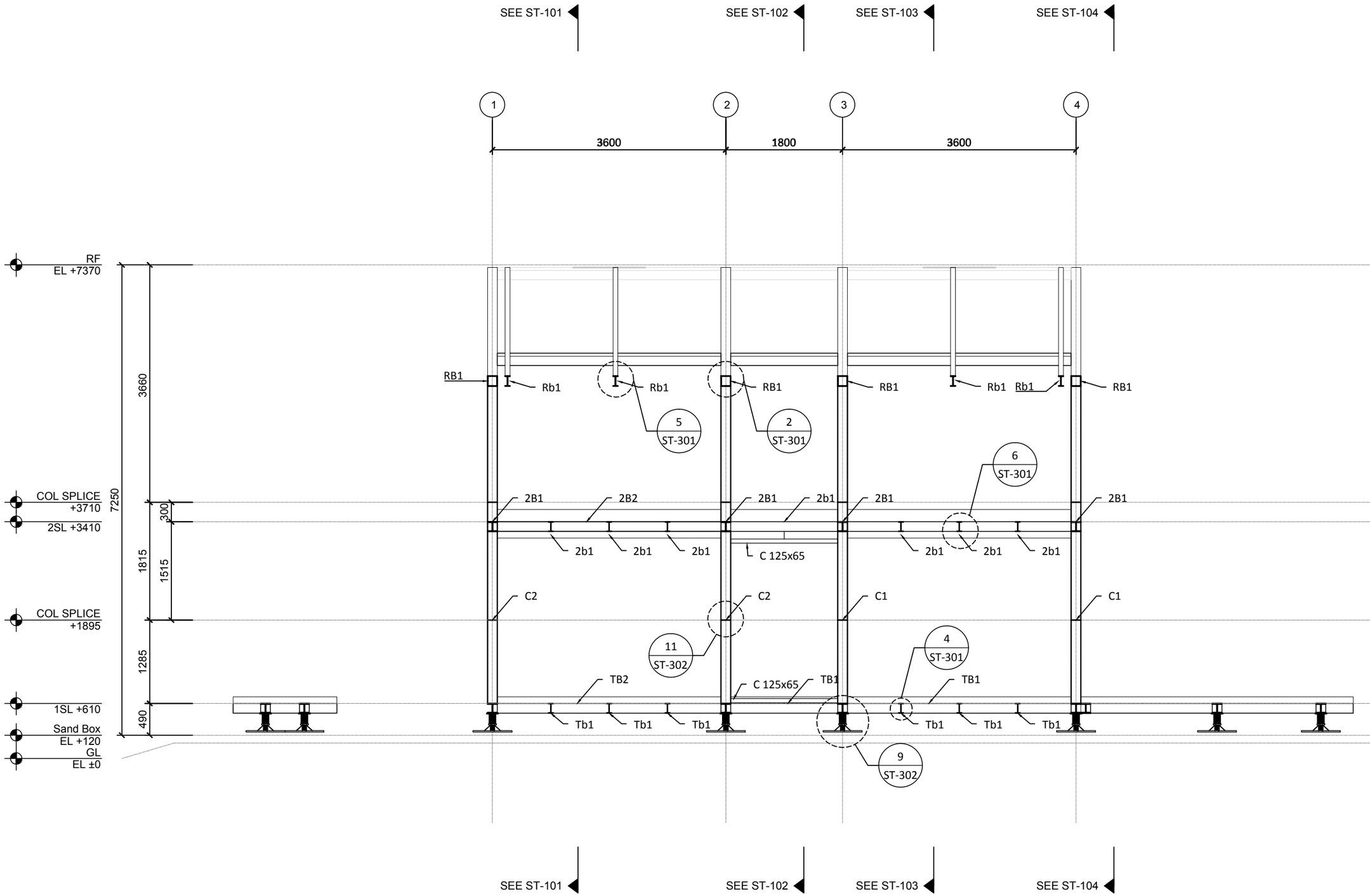

Solar Decathlon Europe

Project: ORCHID HOUSE

Institution: 國立交通大學 National Chiao Tung University

NCTU Architecture 國立交通大學建築研究所

Team Name: NCTU/UNICODE

Address: 1001 Ta-Hsueh Road
Hsinchu City 30010
Taiwan

Contact: www.sde.tw

Consultants: RUENTEX CONSTRUCTION GROUP

Note:

Mark	Date	Description
DN	2013/04/01	SD Submission
DN	2013/07/01	DDc Submission
ST	2013/11/01	DD Submission
ST	2014/03/03	CD Submission
ST	2014/04/30	CD Submission
ST	2014/06/02	CD Submission

Drawn by	ST
Checked by	BT
Scale	1:60
Unit	mm

DWG. Title: STRUCTURAL TRANSVERSAL SECTIONS FRAME C

DWG. No. ST-116

PAGE 152

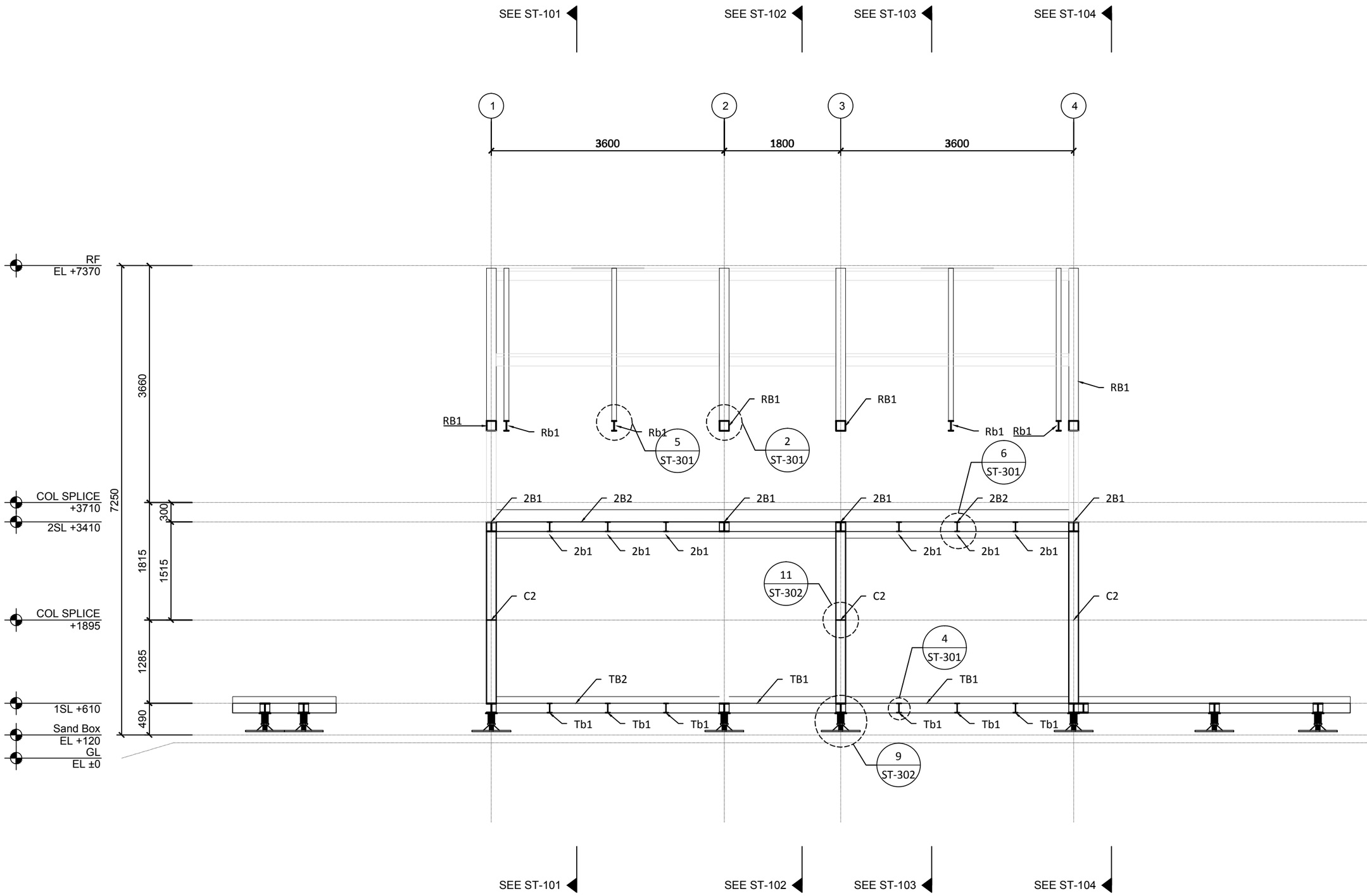

Solar Decathlon Europe

Project: ORCHID HOUSE

Institution: 國立交通大學 National Chiao Tung University

NCTU Architecture 國立交通大學建築研究所

Team Name: NCTU/UNICODE

Address: 1001 Ta-Hsueh Road
Hsinchu City 30010
Taiwan

Contact: www.sde.tw

Consultants: RUENTEX CONSTRUCTION GROUP

Note:

Mark	Date	Description
DN	2013/04/01	SD Submission
DN	2013/07/01	DDc Submission
ST	2013/11/01	DD Submission
ST	2014/03/03	CD Submission
ST	2014/04/30	CD Submission
ST	2014/06/02	CD Submission

Drawn by	ST
Checked by	BT
Scale	1:60
Unit	mm

DWG. Title

STRUCTURAL
TRANSVERSAL SECTIONS
FRAME C-1

DWG. No. ST-117

PAGE 153

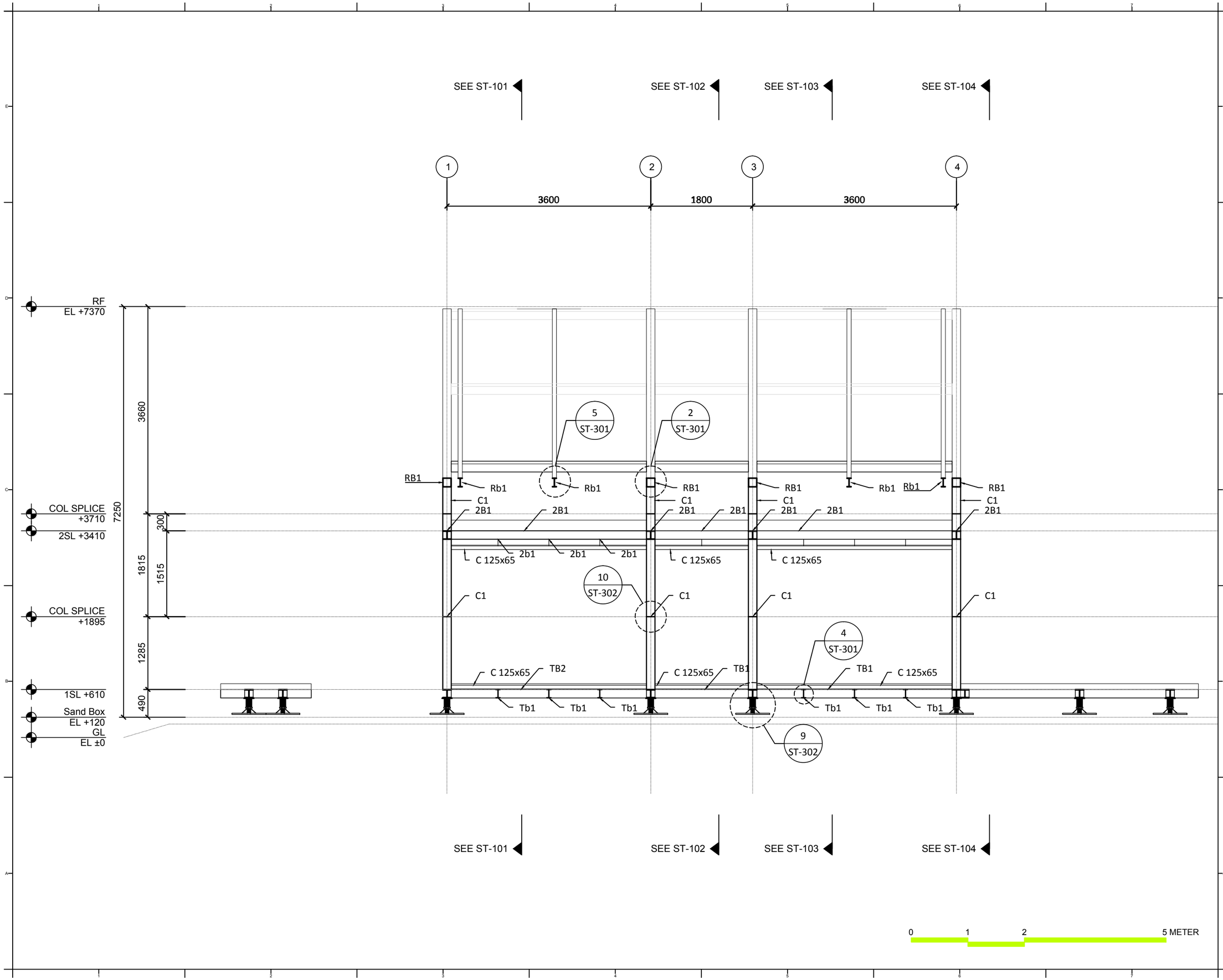

Solar Decathlon Europe

Project:

ORCHID HOUSE

Institution:

國立交通大學 National Chiao Tung University

NCTU Architecture
國立交通大學建築研究所

Team Name: NCTU/UNICODE

Address: 1001 Ta-Hsueh Road
Hsinchu City 30010
Taiwan

Contact: www.sde.tw

Consultants:

RUENTEX CONSTRUCTION GROUP

Note:

Mark	Date	Description
DN	2013/04/01	SD Submission
DN	2013/07/01	DDc Submission
ST	2013/11/01	DD Submission
ST	2014/03/03	CD Submission
ST	2014/04/30	CD Submission
ST	2014/06/02	CD Submission

Drawn by	ST
Checked by	BT
Scale	1:60
Unit	mm

DWG. Title

STRUCTURAL
TRANSVERSAL SECTIONS
FRAME D

DWG. No. ST-118

PAGE 154

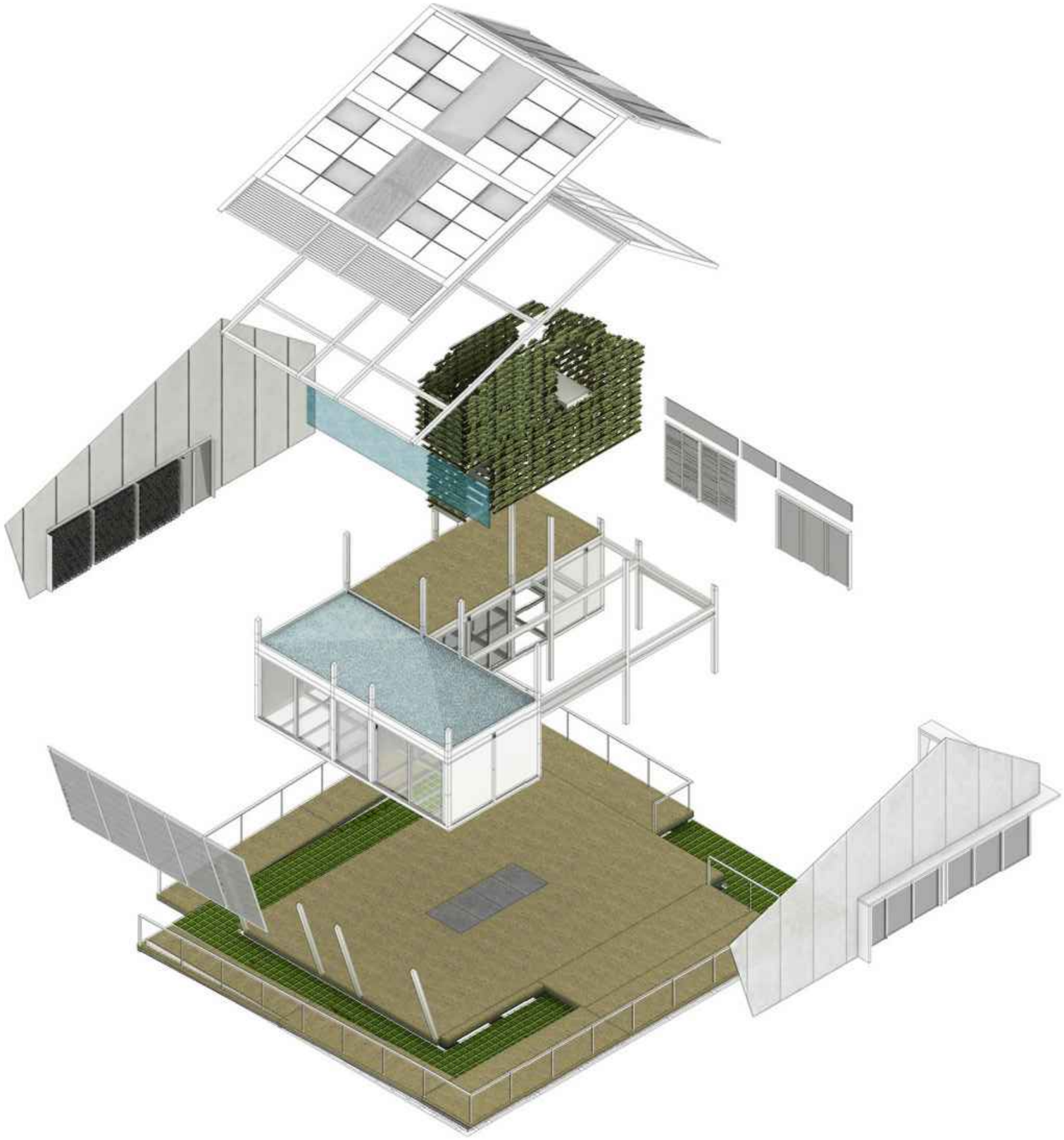

Solar Decathlon Europe

Project:

ORCHID HOUSE

Institution:

國立交通大學 National Chiao Tung University

NCTU Architecture 國立交通大學建築研究所

Team Name: NCTU/UNICODE

Address: 1001 Ta-Hsueh Road
Hsinchu City 30010
Taiwan

Contact: www.sde.tw

Consultants:

RUENTEX CONSTRUCTION GROUP

Note:

Mark	Date	Description
DN	2013/04/01	SD Submission
DN	2013/07/01	DDc Submission
ST	2013/11/01	DD Submission
ST	2014/03/03	CD Submission
ST	2014/04/30	CD Submission
ST	2014/06/02	CD Submission

Drawn by	CF
Checked by	BT
Scale	-
Unit	-

DWG. Title

STRUCTURAL BLOW UPS

DWG. No. ST-201

PAGE 155

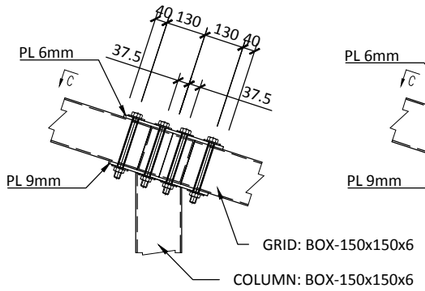

DETAIL 1

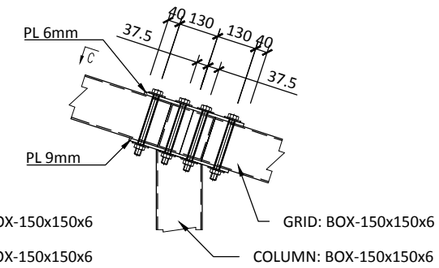

DETAIL 2

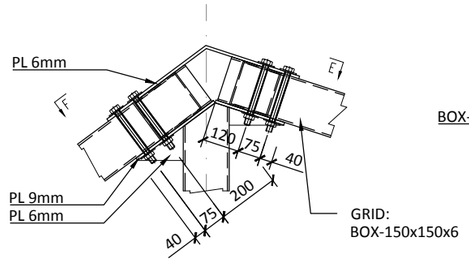

DETAIL 3

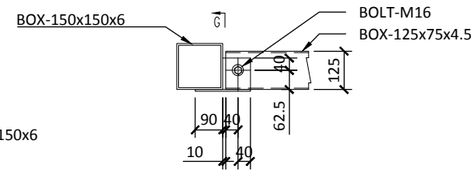

DETAIL 4

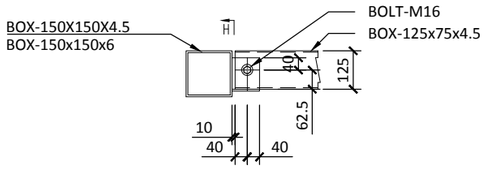

DETAIL 5

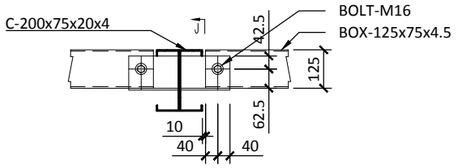

DETAIL 6

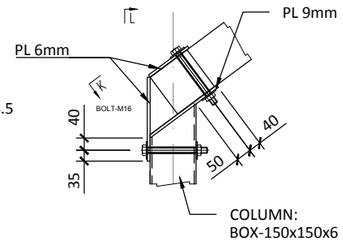

DETAIL 8

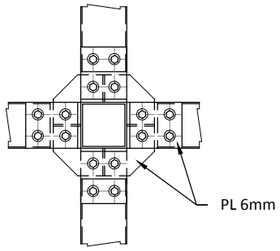

SECTION A

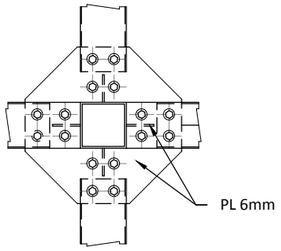

SECTION B

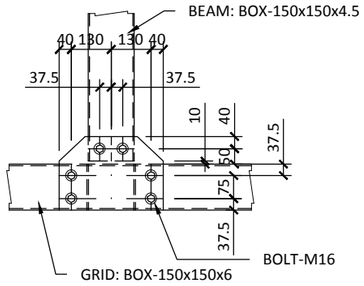

SECTION C

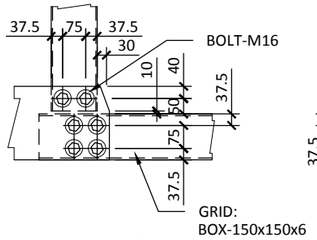

SECTION E

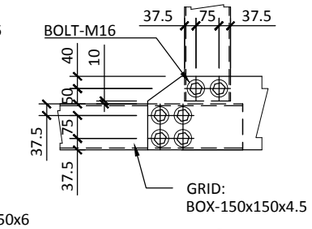

SECTION F

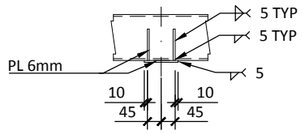

SECTION G

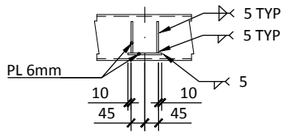

SECTION H

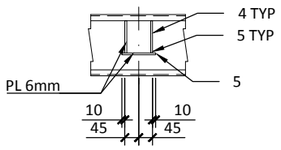

SECTION J

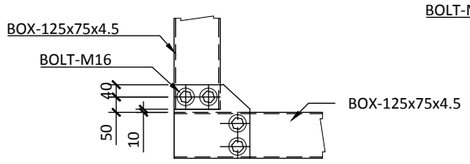

SECTION K

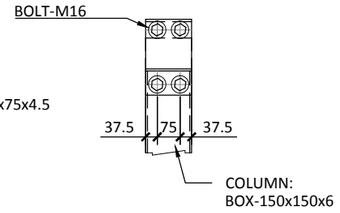

SECTION L

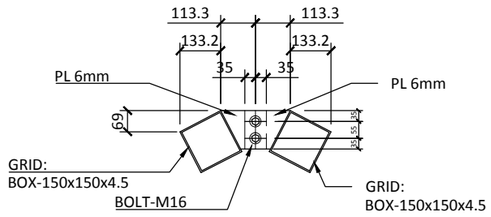

SECTION M

0 0.2 0.4 1 METER

Solar Decathlon Europe

Project: ORCHID HOUSE

Institution: 國立交通大學 National Chiao Tung University

NCTU Architecture 國立交通大學建築研究所

Team Name: NCTU/UNICODE

Address: 1001 Ta-Hsueh Road Hsinchu City 30010 Taiwan

Contact: www.sde.tw

Consultants: RUENTEX CONSTRUCTION GROUP

Note:

Mark	Date	Description
DN	2013/04/01	SD Submission
DN	2013/07/01	DDc Submission
ST	2013/11/01	DD Submission
ST	2014/03/03	CD Submission
ST	2014/04/30	CD Submission
ST	2014/06/02	CD Submission

Drawn by	CF
Checked by	BT
Scale	1:20
Unit	mm

DWG. Title: STRUCTURAL DETAILS

DWG. No. ST-301

PAGE 156

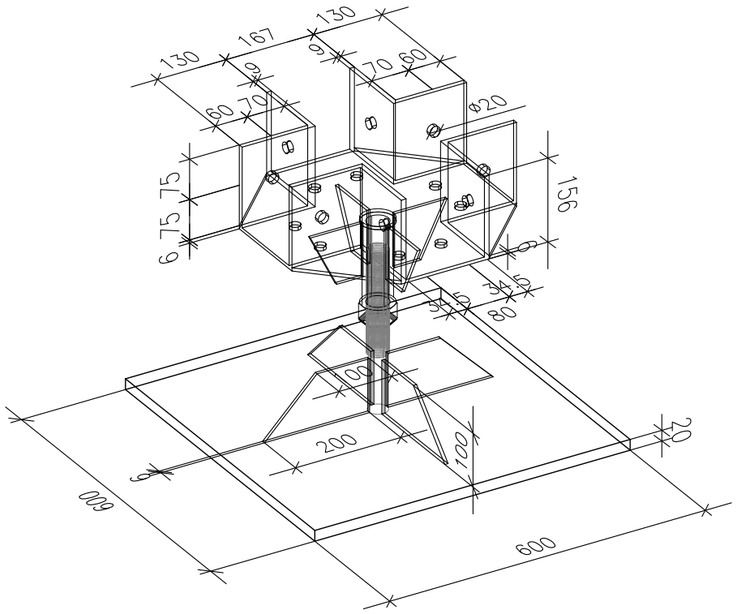

9

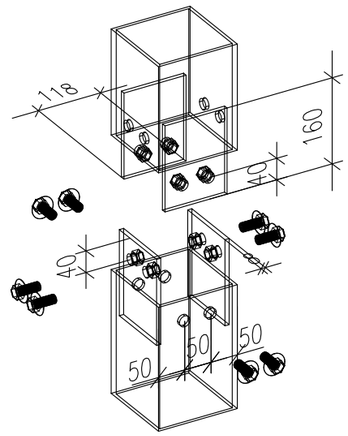

10

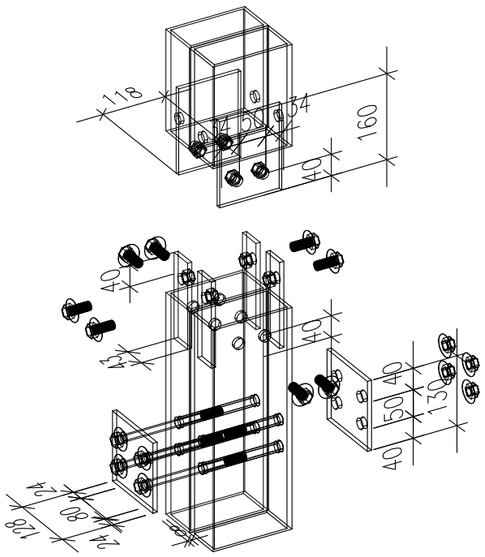

11

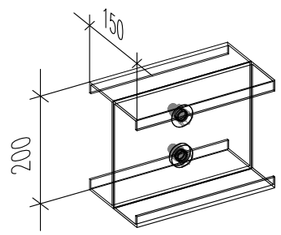

12

0 0.1 0.2 0.5 METER

Solar Decathlon Europe

Project: ORCHID HOUSE

Institution: 國立交通大學 National Chiao Tung University

NCTU Architecture 國立交通大學建築研究所

Team Name: NCTU/UNICODE

Address: 1001 Ta-Hsueh Road
Hsinchu City 30010
Taiwan

Contact: www.sde.tw

Consultants: RUENTEX CONSTRUCTION GROUP

Note:

Mark	Date	Description
DN	2013/04/01	SD Submission
DN	2013/07/01	DDc Submission
ST	2013/11/01	DD Submission
ST	2014/03/03	CD Submission
ST	2014/04/30	CD Submission
ST	2014/06/02	CD Submission

Drawn by	CF
Checked by	BT
Scale	1:10
Unit	mm

DWG. Title: STRUCTURE DETAILS AXON

DWG. No. ST-302

PAGE 157

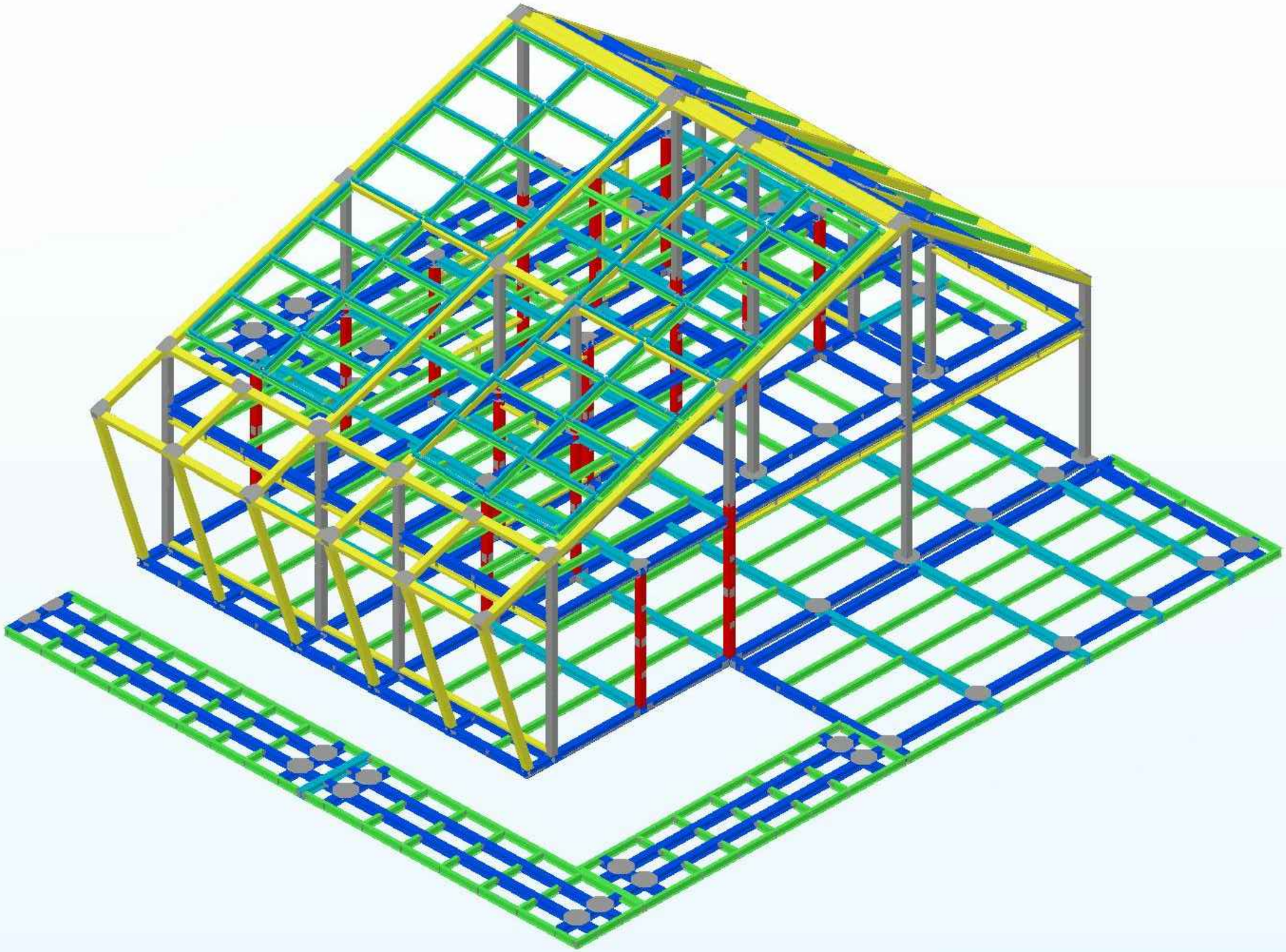

Solar Decathlon Europe

Project: ORCHID HOUSE

Institution: 國立交通大學 National Chiao Tung University

NCTU Architecture 國立交通大學建築研究所

Team Name: NCTU/UNICODE

Address: 1001 Ta-Hsueh Road
Hsinchu City 30010
Taiwan

Contact: www.sde.tw

Consultants: RUENTEX CONSTRUCTION GROUP

Note:

Mark	Date	Description
DN	2013/04/01	SD Submission
DN	2013/07/01	DDc Submission
ST	2013/11/01	DD Submission
ST	2014/03/03	CD Submission
ST	2014/04/30	CD Submission
ST	2014/06/02	CD Submission

Drawn by	ST
Checked by	DN
Scale	N/A
Unit	N/A

DWG. Title

STRUCTURAL AXON

DWG. No. ST-401

PAGE 158

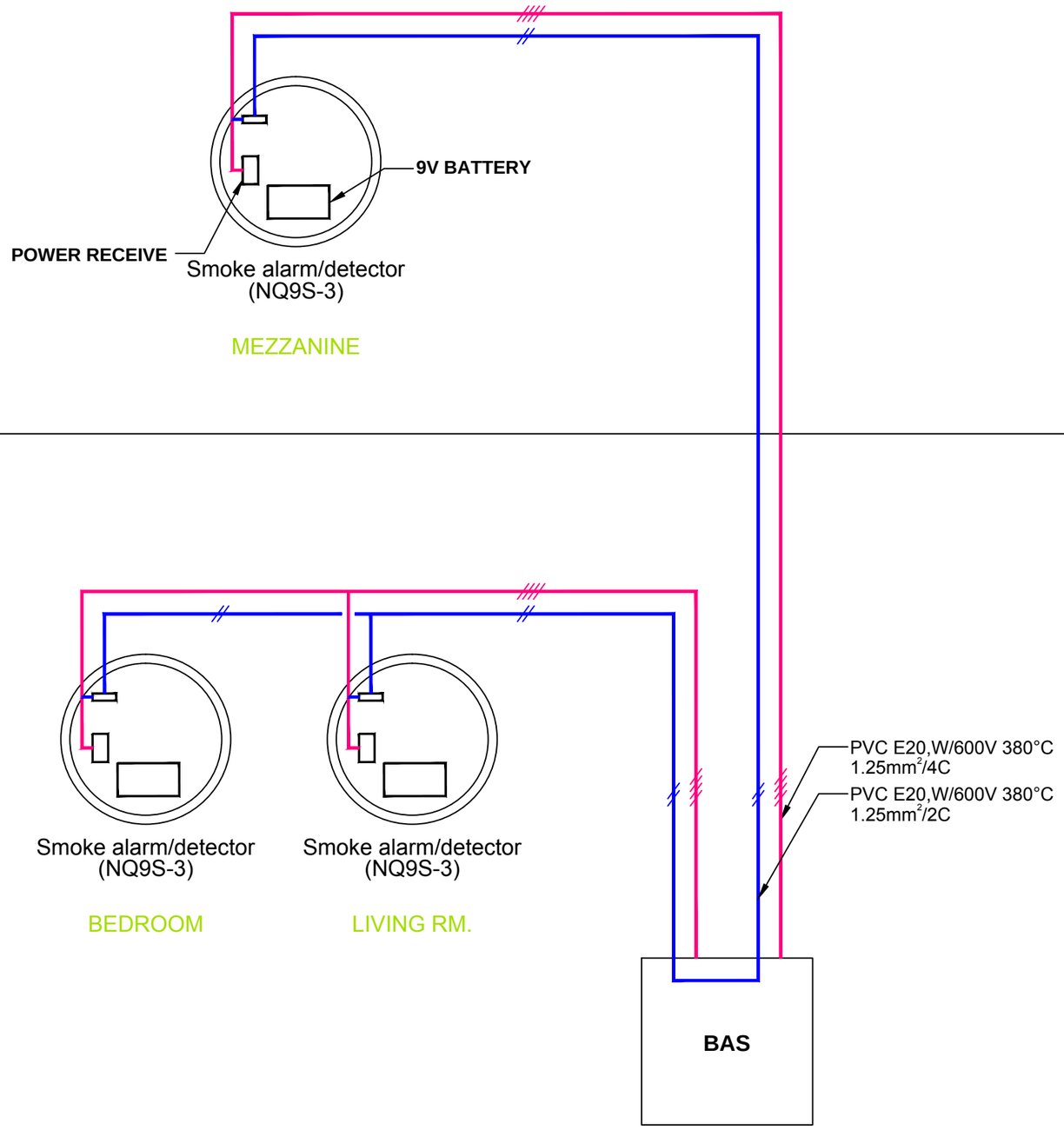

Solar Decathlon Europe

Project: ORCHID HOUSE

Institution: 國立交通大學 National Chiao Tung University

NCTU Architecture 國立交通大學建築研究所

Team Name: NCTU/UNICODE

Address: 1001 Ta-Hsueh Road
Hsinchu City 30010
Taiwan

Contact: www.sde.tw

Consultants:

Note:

N

Mark	Date	Description
DN	2013/04/01	SD Submission
DN	2013/07/01	DDc Submission
ST	2013/11/01	DD Submission
ST	2014/03/03	CD Submission
ST	2014/04/30	CD Submission
ST	2014/06/02	CD Submission

Drawn by: HU

Checked by: CHESTER

Scale: -

Unit: mm

DWG. Title: FIRE PROTECTION GROUND LEVEL

DWG. No.: FP-001

PAGE: 159

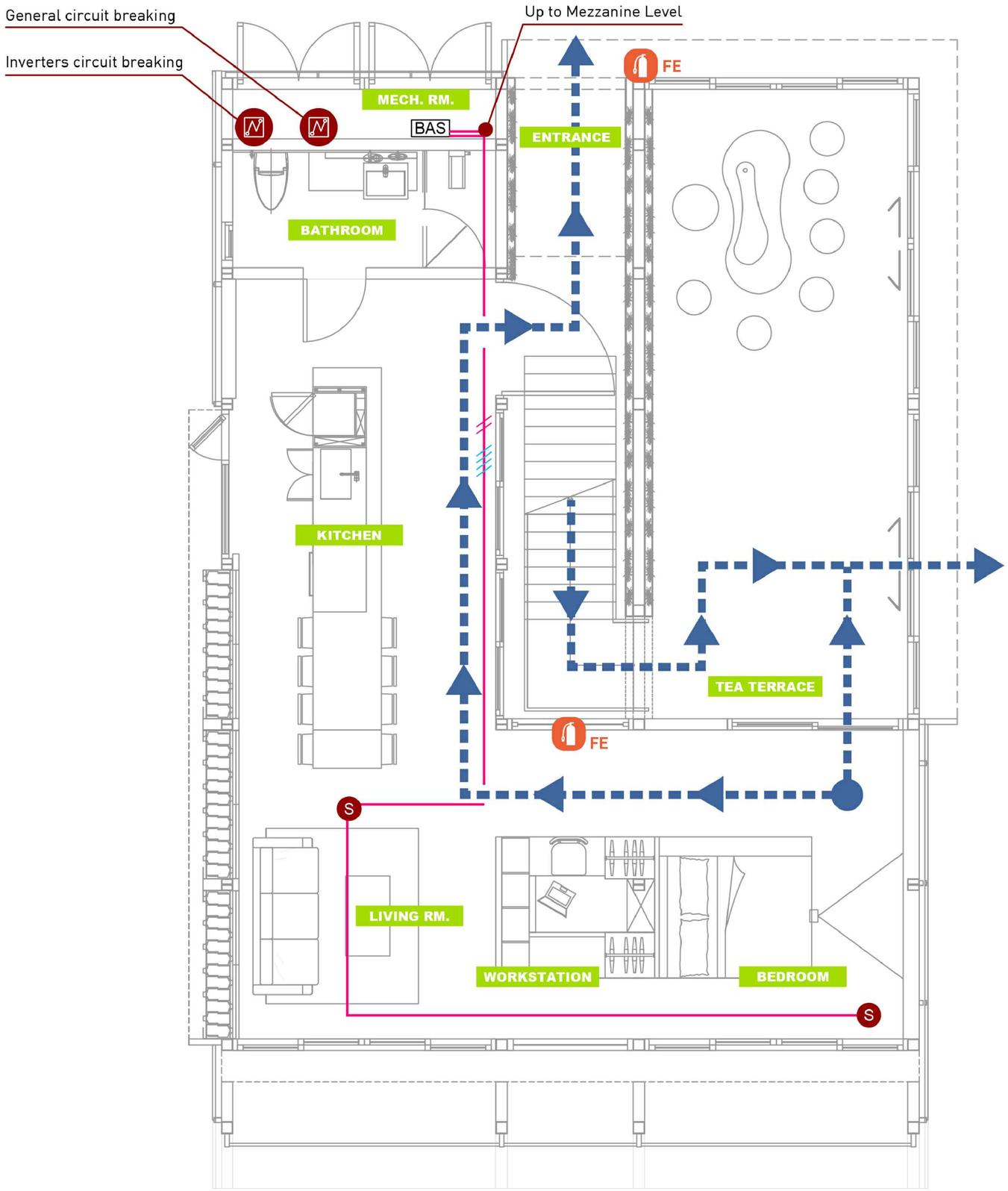

PVC E20,W/600V 380°C
1.25mm²/4C,1.25mm²/2C

Smoke Alarm/Detector
NQ9S-3 :
-DC 9V Battery
-Alarm Contacts
-Interlock with all detectors when alarm of any detector
-AC 220V

Fire Extinguisher
ABC-EN3-4K :
21A/113B/C efficiency

Power cut ON/OFF
General circuit breaking

Power cut ON/OFF
Inverters circuit breaking

Solar Decathlon Europe

Project: ORCHID HOUSE

Institution: 國立交通大學 National Chiao Tung University

NCTU Architecture 國立交通大學建築研究所

Team Name: NCTU/UNICODE
Address: 1001 Ta-Hsueh Road
Hsinchu City 30010
Taiwan
Contact: www.sde.tw

Consultants: uis United Integrated Services

Note:

Mark	Date	Description
DN	2013/04/01	SD Submission
DN	2013/07/01	DDc Submission
ST	2013/11/01	DD Submission
ST	2014/03/03	CD Submission
ST	2014/04/30	CD Submission
ST	2014/06/02	CD Submission

Drawn by	HU
Checked by	CHESTER
Scale	1:60
Unit	mm

DWG. Title: FIRE PROTECTION GROUND LEVEL

DWG. No. FP-002

PAGE 160

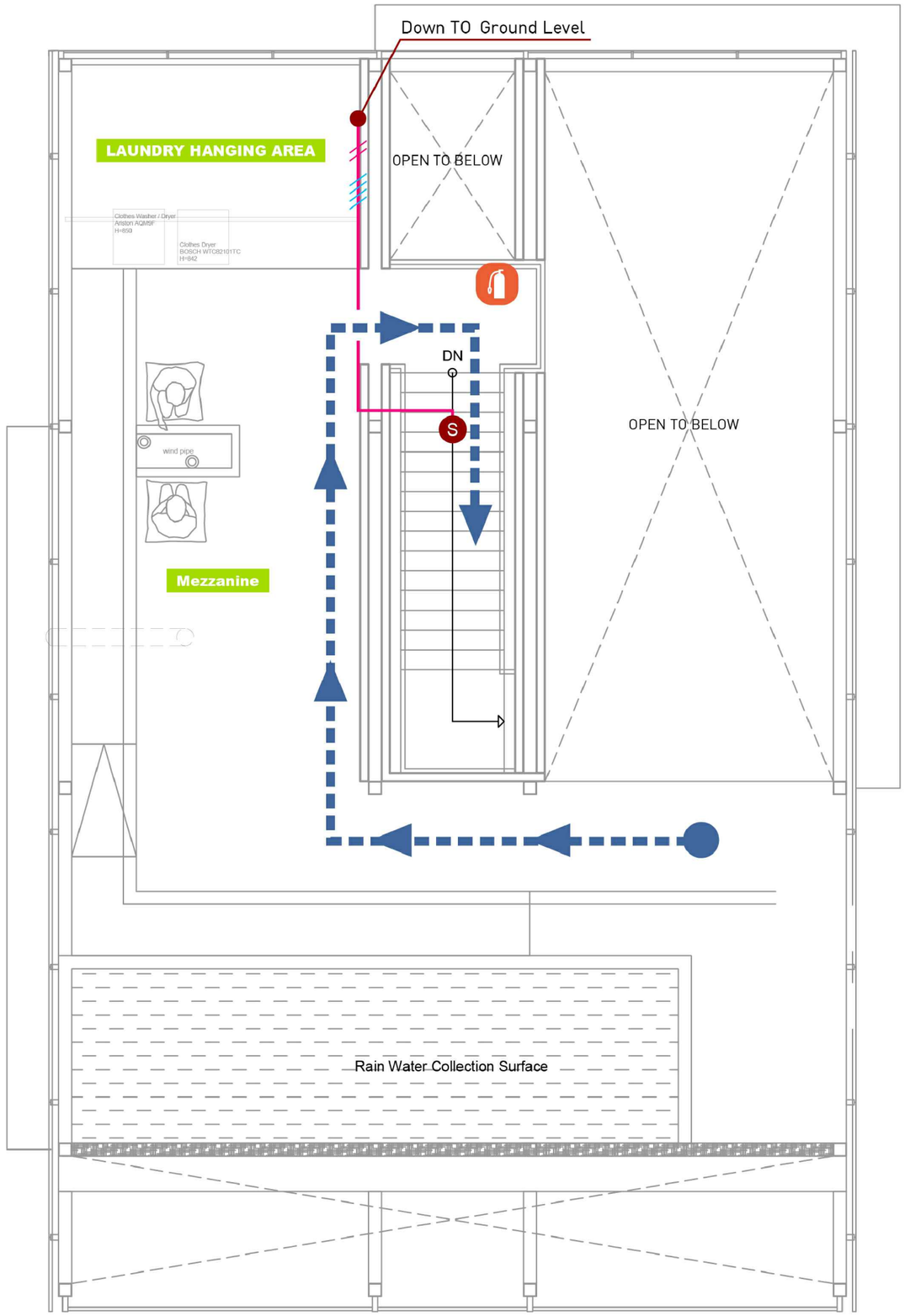

1.25mm²/4C,1.25mm²/2C

S

NQ9S-3 :
-DC 9V Battery
-Alarm Contacts
-Interlock with all detectors
when alarm of any detector
-AC 220V

Fire Extinguisher
ABC-EN3-4K :
21A/113B/C efficiency

Evacuation Route

Evacuation Origin

Solar Decathlon Europe

Project: ORCHID HOUSE

Institution: 國立交通大學 National Chiao Tung University

NCTU Architecture 國立交通大學建築研究所

Team Name: NCTU/UNICODE
Address: 1001 Ta-Hsueh Road
Hsinchu City 30010
Taiwan
Contact: www.sde.tw

Consultants: uis United Integrated Services

Note:

N

Mark	Date	Description
DN	2013/04/01	SD Submission
DN	2013/07/01	DDc Submission
ST	2013/11/01	DD Submission
ST	2014/03/03	CD Submission
ST	2014/04/30	CD Submission
ST	2014/06/02	CD Submission

Drawn by	HU
Checked by	CHESTER
Scale	1:60
Unit	mm

DWG. Title
FIRE PROTECTION
MEZZANINE LEVEL

DWG. No. FP-003

PAGE 161

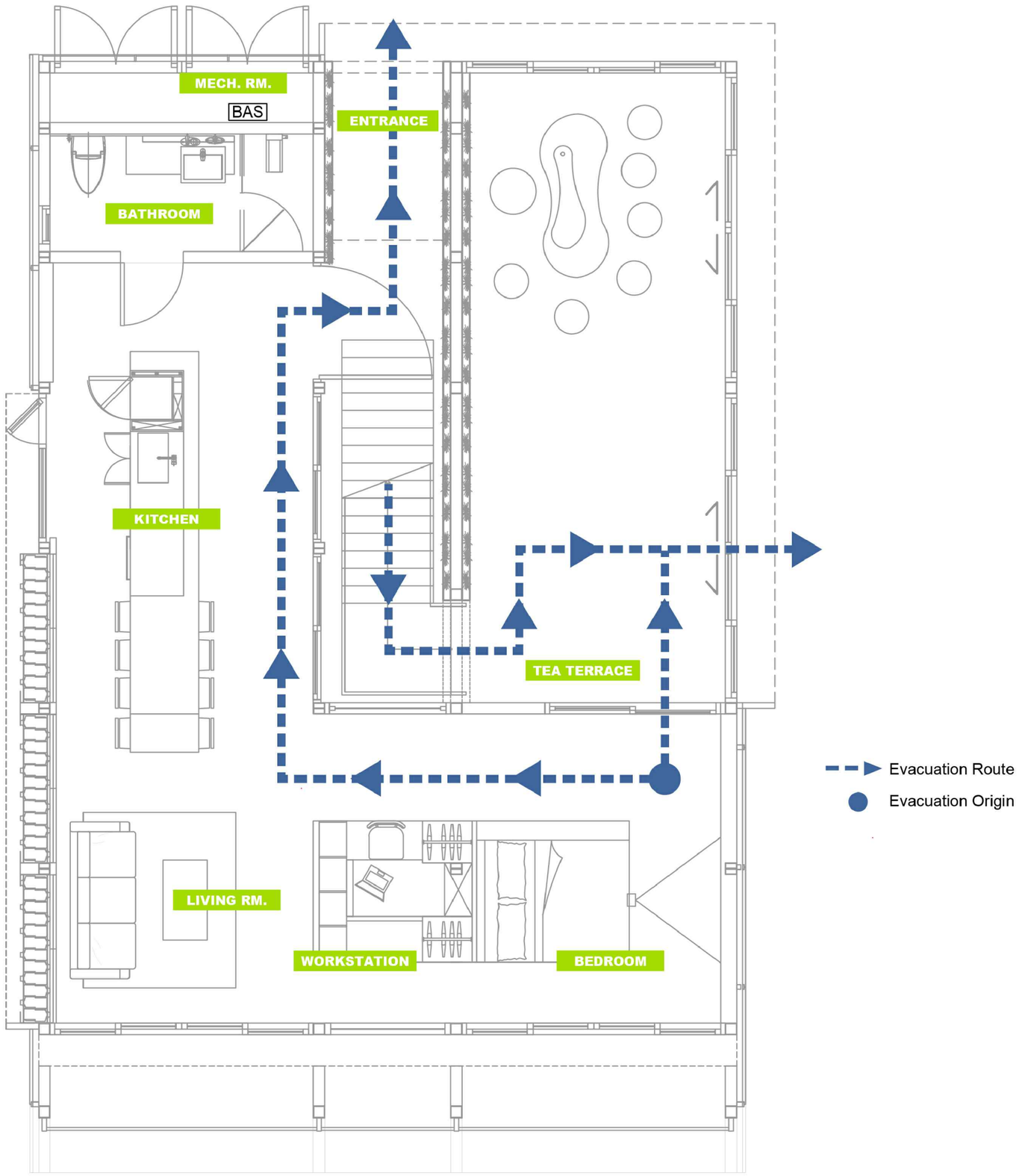

Solar Decathlon Europe

Project: ORCHID HOUSE

Institution: 國立交通大學 National Chiao Tung University

NCTU Architecture 國立交通大學建築研究所

Team Name: NCTU/UNICODE

Address: 1001 Ta-Hsueh Road
Hsinchu City 30010
Taiwan

Contact: www.sde.tw

Consultants: uis United Integrated Services

Note:

N

Mark	Date	Description
DN	2013/04/01	SD Submission
DN	2013/07/01	DDc Submission
ST	2013/11/01	DD Submission
ST	2014/03/03	CD Submission
ST	2014/04/30	CD Submission
ST	2014/06/02	CD Submission

Drawn by	HU
Checked by	CHESTER
Scale	1:60
Unit	mm

DWG. Title
FIRE PROTECTION
EVACUATION PATH
GROUND LEVEL

DWG. No. FP-004

PAGE 162

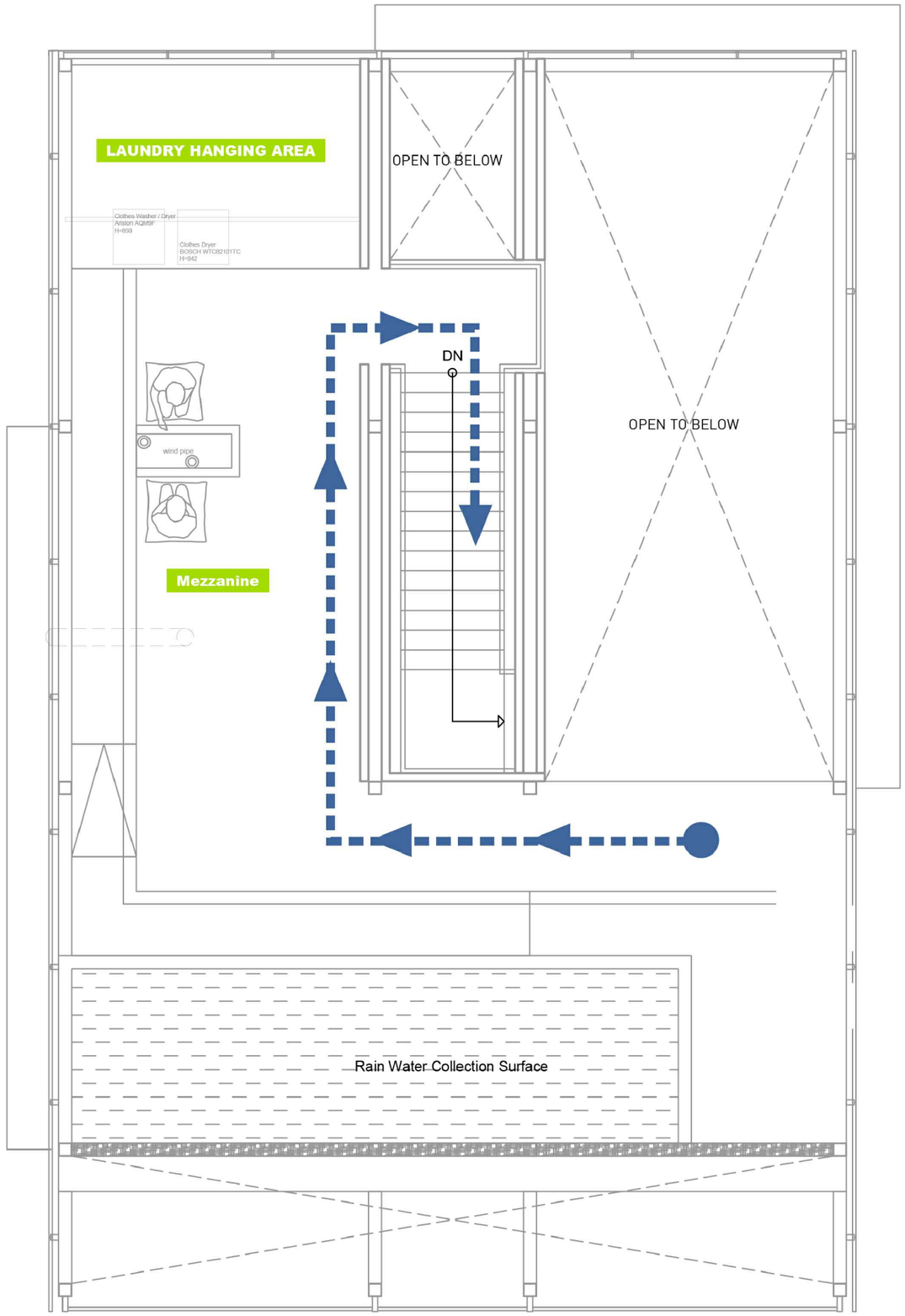

1.25mm²/4C,1.25mm²/2C

S

NQ9S-3 :
-DC 9V Battery
-Alarm Contacts
-Interlock with all detectors
when alarm of any detector
-AC 220V

Fire Extinguisher
ABC-EN3-4K :
21A/113B/C efficiency

Evacuation Route

Evacuation Origin

Solar Decathlon Europe

Project: ORCHID HOUSE

Institution: 國立交通大學 National Chiao Tung University

NCTU Architecture 國立交通大學建築研究所

Team Name: NCTU/UNICODE
Address: 1001 Ta-Hsueh Road
Hsinchu City 30010
Taiwan
Contact: www.sde.tw

Consultants: uis United Integrated Services

Note:

Mark	Date	Description
DN	2013/04/01	SD Submission
DN	2013/07/01	DDc Submission
ST	2013/11/01	DD Submission
ST	2014/03/03	CD Submission
ST	2014/04/30	CD Submission
ST	2014/06/02	CD Submission

Drawn by	HU
Checked by	CHESTER
Scale	1:60
Unit	mm

DWG. Title
FIRE PROTECTION
EVACUATION PATH
MEZZANINE LEVEL

DWG. No. FP-005

PAGE 163

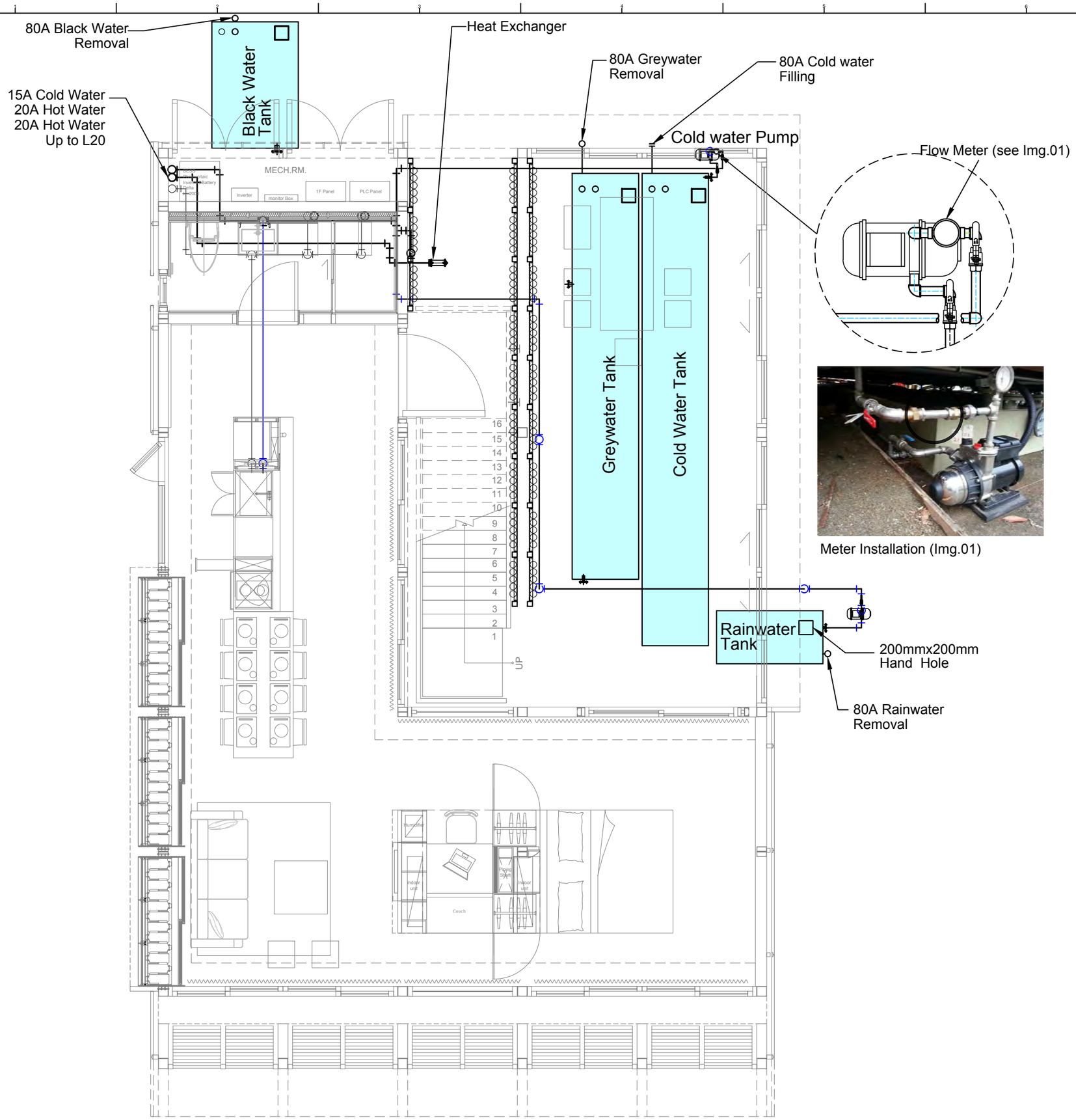

Meter Installation (Img.01)

1. **Cold Water Tank**
   Size : 1.00x7.00x0.30 m,
   Volume : 2100l.
2. **Greywater tank**
   Size : 1.00x6.00x0.30 m,
   Volume : 1800l.
3. **Black Water Tank**
   Size : 1.20x1.80x0.30 m,
   Volume : 600l.
4. **Rainwater Tank**
   Size : 0.70x1.50x0.30 m,
   Volume : 300l.
5. **Rainwater Pump**
   Flow : 15 lpm
   Head : 15 m
6. **Cold Water Pump**
   Flow : 25 lpm
   Head : 20 m

Solar Decathlon Europe

Project: ORCHID HOUSE

Institution: 國立交通大學 National Chiao Tung University

NCTU Architecture 國立交通大學建築研究所

Team Name: NCTU/UNICODE

Address: 1001 Ta-Hsueh Road
Hsinchu City 30010
Taiwan

Contact: www.sde.tw

Consultants: UIS United Integrated Services

Note:

Mark	Date	Description
DN	2013/04/01	SD Submission
DN	2013/07/01	DDc Submission
ST	2013/11/01	DD Submission
ST	2014/03/03	CD Submission
ST	2014/04/30	CD Submission
ST	2014/06/02	CD Submission

Drawn by	MH
Checked by	-
Scale	1:60
Unit	mm

DWG. Title
PLUMBING SUPPLY AND REMOVAL
GROUND LEVEL PLAN

DWG. No. PL-001

PAGE 164

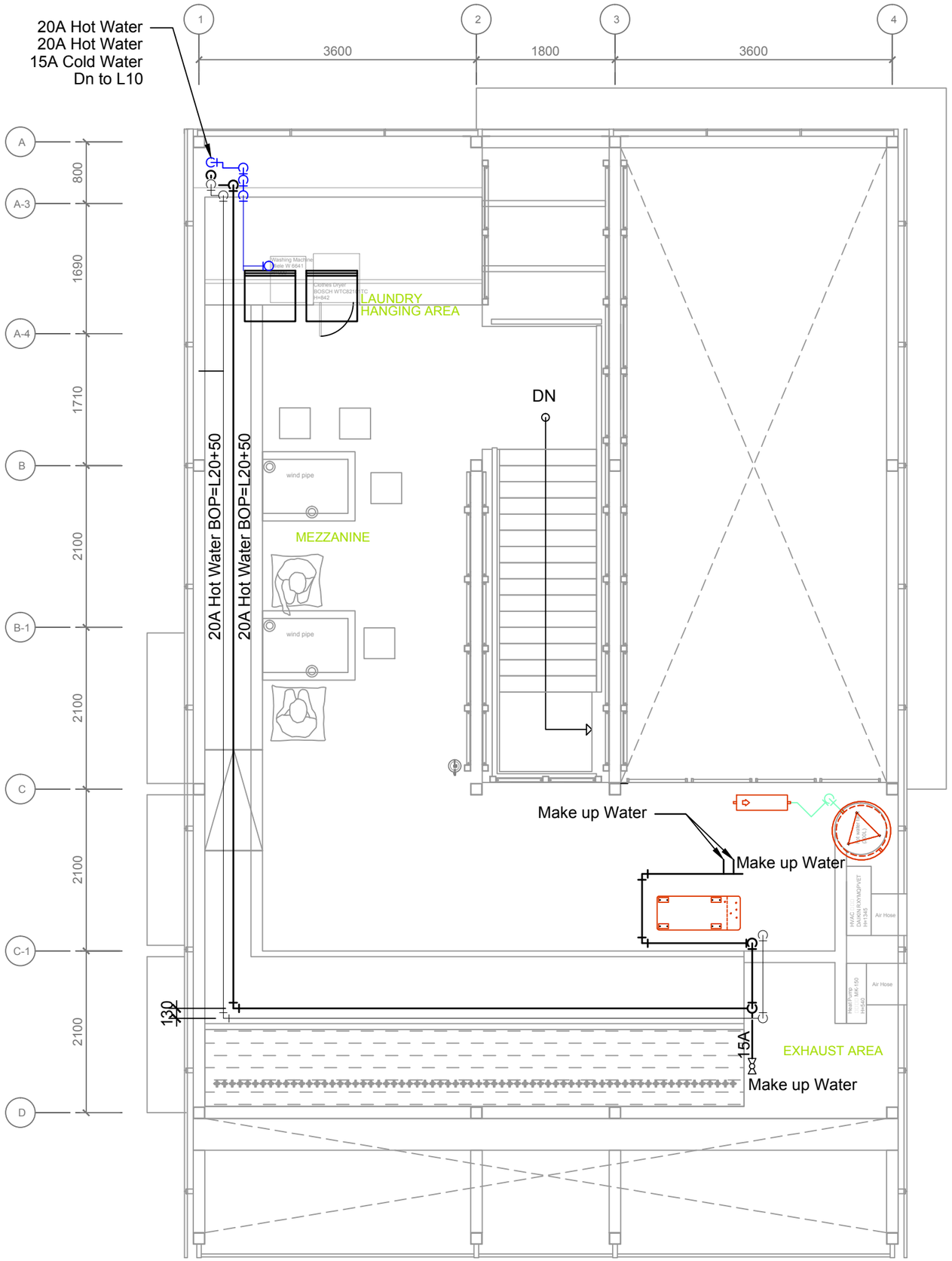

Solar Decathlon Europe

Project: ORCHID HOUSE

Institution: 國立交通大學 National Chiao Tung University

NCTU Architecture 國立交通大學建築研究所

Team Name: NCTU/UNICODE

Address: 1001 Ta-Hsueh Road
Hsinchu City 30010
Taiwan

Contact: www.sde.tw

Consultants: uis United Integrated Services

Note:

Mark	Date	Description
DN	2013/04/01	SD Submission
DN	2013/07/01	DDc Submission
ST	2013/11/01	DD Submission
ST	2014/03/03	CD Submission
ST	2014/04/30	CD Submission
ST	2014/06/02	CD Submission

Drawn by	MH
Checked by	-
Scale	1:60
Unit	mm

DWG. Title
PLUMBING SUPPLY AND REMOVAL
MEZZANINE LEVEL PLAN

DWG. No. PL-002

PAGE 165

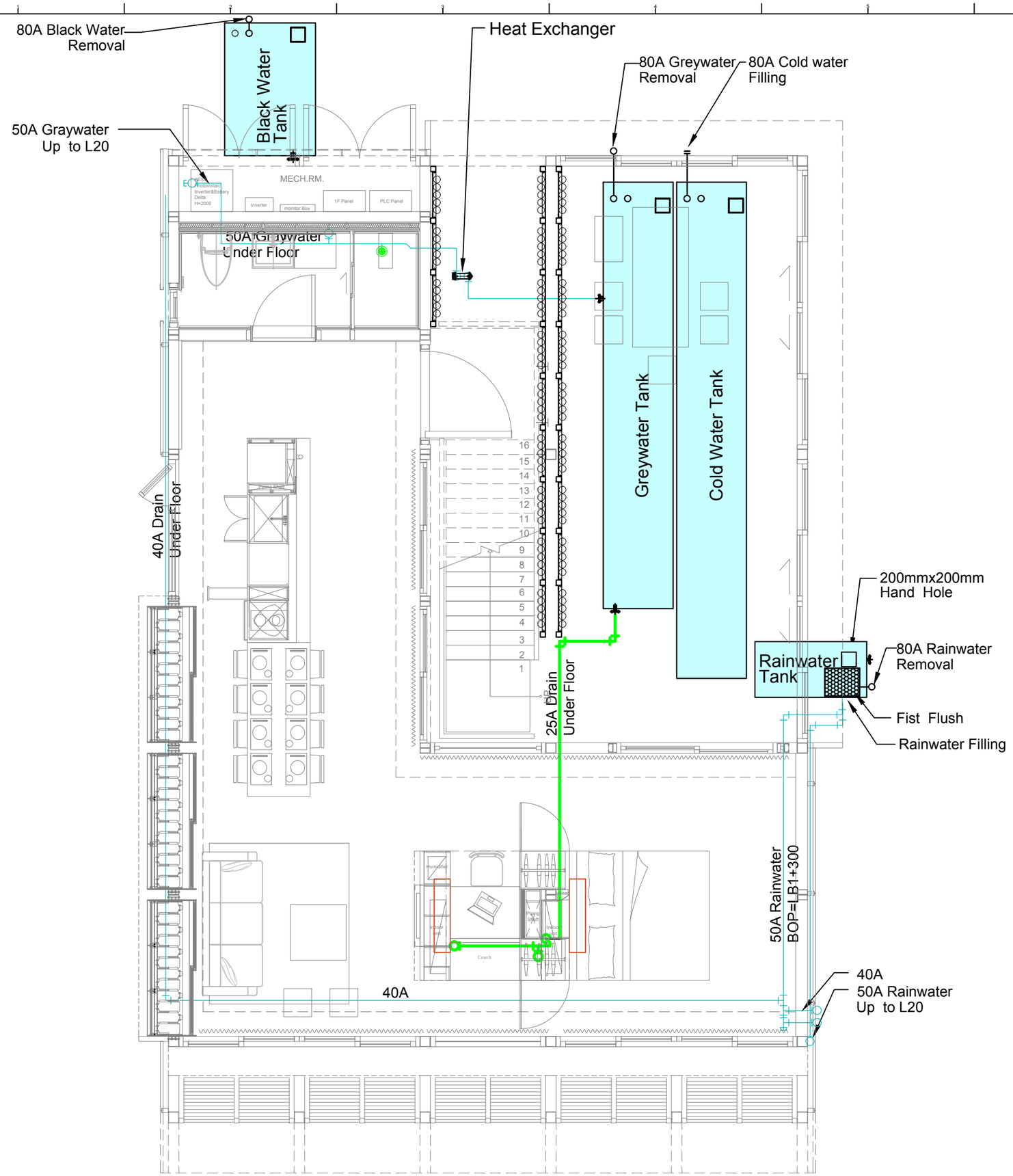

1. **Cold Water Tank**
   Size : 1.00x7.00x0.30 m,
   Volume : 2100l.

2. **Greywater tank**
   Size : 1.00x6.00x0.30 m,
   Volume : 1800l.

3. **Black Water Tank**
   Size : 2.00x1.00x0.30 m,
   Volume : 600l.

4. **Rainwater Tank**
   Size : 1.50x0.70x0.30 m,
   Volume : 300l.

5. **Rainwater Pump**
   Flow : 15 lpm
   Head : 15 m

6. **Cold Water Pump**
   Flow : 20 lpm
   Head : 18 m

Solar Decathlon Europe

Project: ORCHID HOUSE

Institution: 國立交通大學 National Chiao Tung University

NCTU Architecture 國立交通大學建築研究所

Team Name: NCTU/UNICODE

Address: 1001 Ta-Hsueh Road Hsinchu City 30010 Taiwan

Contact: www.sde.tw

Consultants: UIS United Integrated Services

Note:

Mark	Date	Description
DN	2013/04/01	SD Submission
DN	2013/07/01	DDc Submission
ST	2013/11/01	DD Submission
ST	2014/03/03	CD Submission
ST	2014/04/30	CD Submission
ST	2014/06/02	CD Submission

Drawn by	MH
Checked by	-
Scale	1:60
Unit	mm

DWG. Title: GRAY WATER GROUND LEVEL

DWG. No. PL-011

PAGE 166

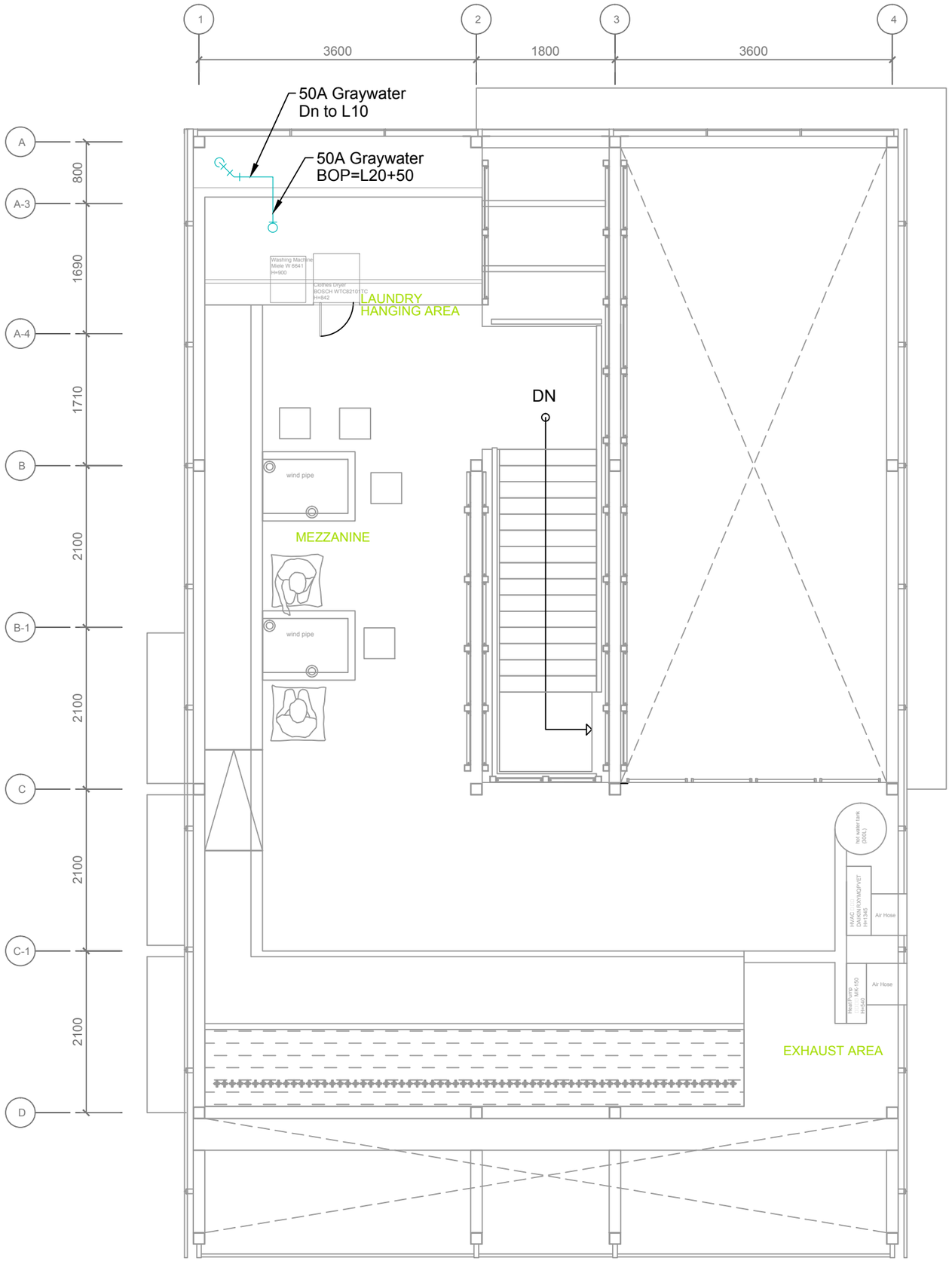

Solar Decathlon Europe

Project:

ORCHID HOUSE

Institution:

國立交通大學
National Chiao Tung University

NCTU Architecture
國立交通大學建築研究所

Team Name: NCTU/UNICODE

Address: 1001 Ta-Hsueh Road
Hsinchu City 30010
Taiwan

Contact: www.sde.tw

Consultants:

uis
United Integrated Services

Note:

N

Mark	Date	Description
DN	2013/04/01	SD Submission
DN	2013/07/01	DDc Submission
ST	2013/11/01	DD Submission
ST	2014/03/03	CD Submission
ST	2014/04/30	CD Submission
ST	2014/06/02	CD Submission

Drawn by	MH
Checked by	-
Scale	1:60
Unit	mm

DWG. Title
GRAY WATER
MEZZANINE LEVEL

DWG. No. PL-012

PAGE 167

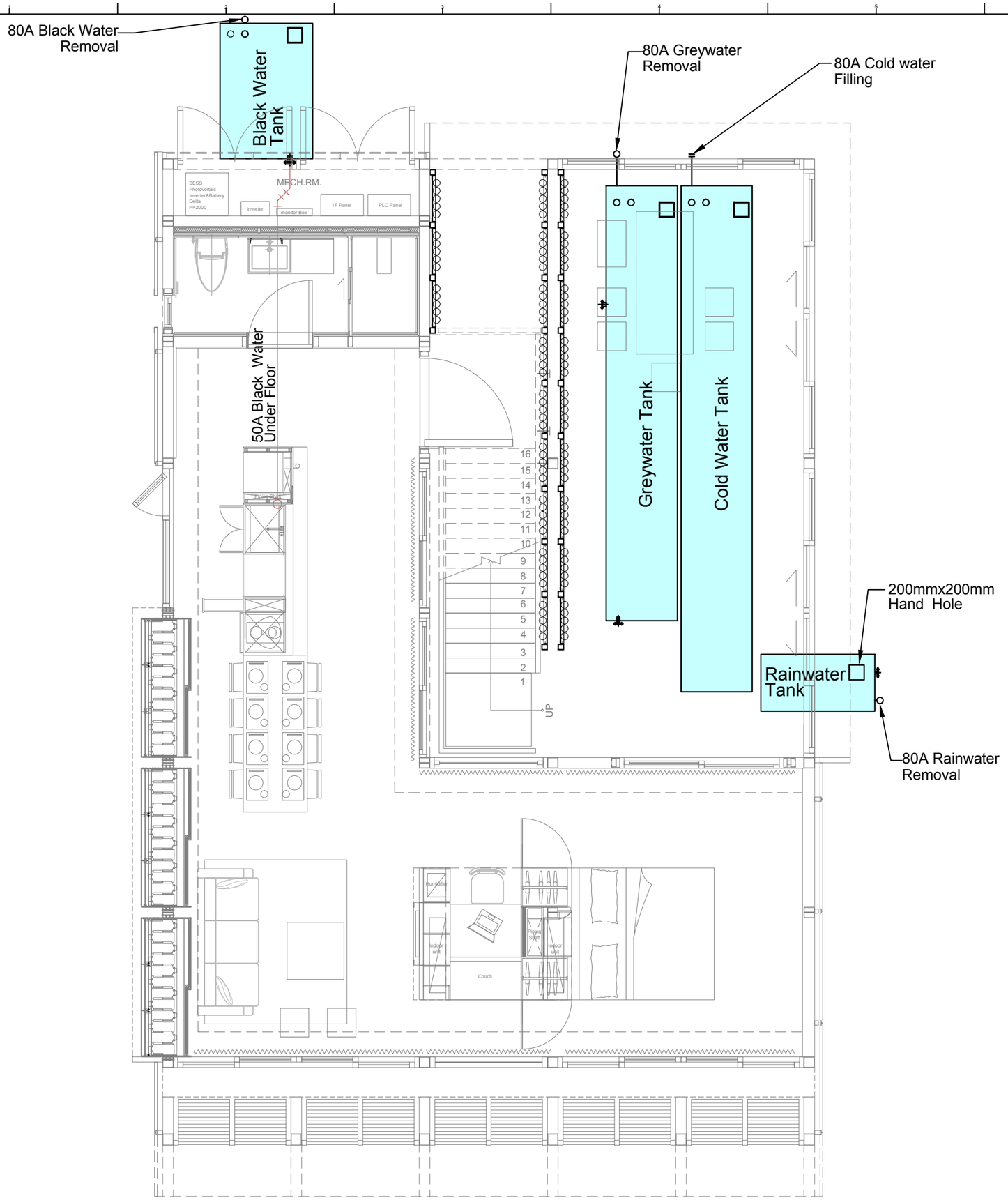

1. **Cold Water Tank**
   Size : 1.00x7.00x0.30 m,
   Volume : 2100l.

2. **Greywater tank**
   Size : 1.00x6.00x0.30 m,
   Volume : 1800l.

3. **Black Water Tank**
   Size : 1.20x1.80x0.30 m,
   Volume : 600l.

4. **Rainwater Tank**
   Size : 0.70x1.50x0.30 m,
   Volume : 300l.

5. **Rainwater Pump**
   Flow : 15 lpm
   Head : 15 m

6. **Cold Water Pump**
   Flow : 25 lpm
   Head : 20 m

Solar Decathlon Europe

Project: ORCHID HOUSE

Institution: 國立交通大學 National Chiao Tung University

NCTU Architecture 國立交通大學建築研究所

Team Name: NCTU/UNICODE
Address: 1001 Ta-Hsueh Road Hsinchu City 30010 Taiwan
Contact: www.sde.tw

Consultants: UIS United Integrated Services

Note:

Mark	Date	Description
DN	2013/04/01	SD Submission
DN	2013/07/01	DDc Submission
ST	2013/11/01	DD Submission
ST	2014/03/03	CD Submission
ST	2014/04/30	CD Submission
ST	2014/06/02	CD Submission

Drawn by	MH
Checked by	-
Scale	1:60
Unit	mm

DWG. Title: DRAIN / WASTE / VENT Ground Level

DWG. No. PL-021

PAGE 168

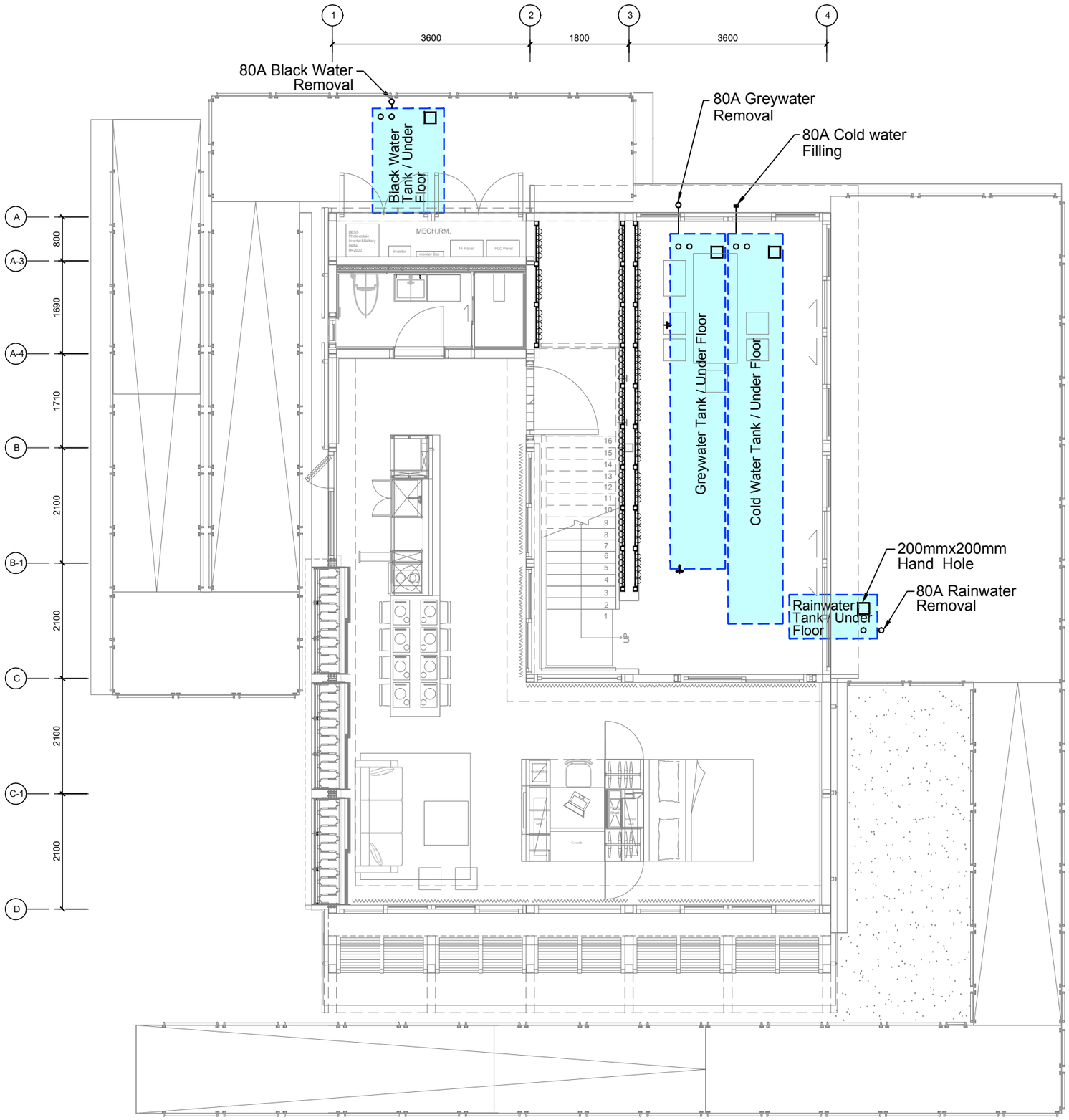

1. **Cold Water Tank**
   Size : 1.00x7.00x0.30 m,
   Volume : 2100l.

2. **Greywater tank**
   Size : 1.00x6.00x0.30 m,
   Volume : 1800l.

3. **Black Water Tank**
   Size : 1.20x1.80x0.30 m,
   Volume : 600l.

4. **Rainwater Tank**
   Size : 0.70x1.50x0.30 m,
   Volume : 300l.

5. **Rainwater Pump**
   Flow : 15 lpm
   Head : 15 m

6. **Cold Water Pump**
   Flow : 25 lpm
   Head : 20 m

Solar Decathlon Europe

Project: ORCHID HOUSE

Institution: 國立交通大學 National Chiao Tung University

NCTU Architecture 國立交通大學建築研究所

Team Name: NCTU/UNICODE
Address: 1001 Ta-Hsueh Road
Hsinchu City 30010
Taiwan
Contact: www.sde.tw

Consultants: UIS United Integrated Services

Note:

Mark	Date	Description
DN	2013/04/01	SD Submission
DN	2013/07/01	DDc Submission
ST	2013/11/01	DD Submission
ST	2014/03/03	CD Submission
ST	2014/04/30	CD Submission
ST	2014/06/02	CD Submission

Drawn by	MH
Checked by	-
Scale	1:60
Unit	mm

DWG. Title: Containers and Fill Locations

DWG. No. PL-031

PAGE 169

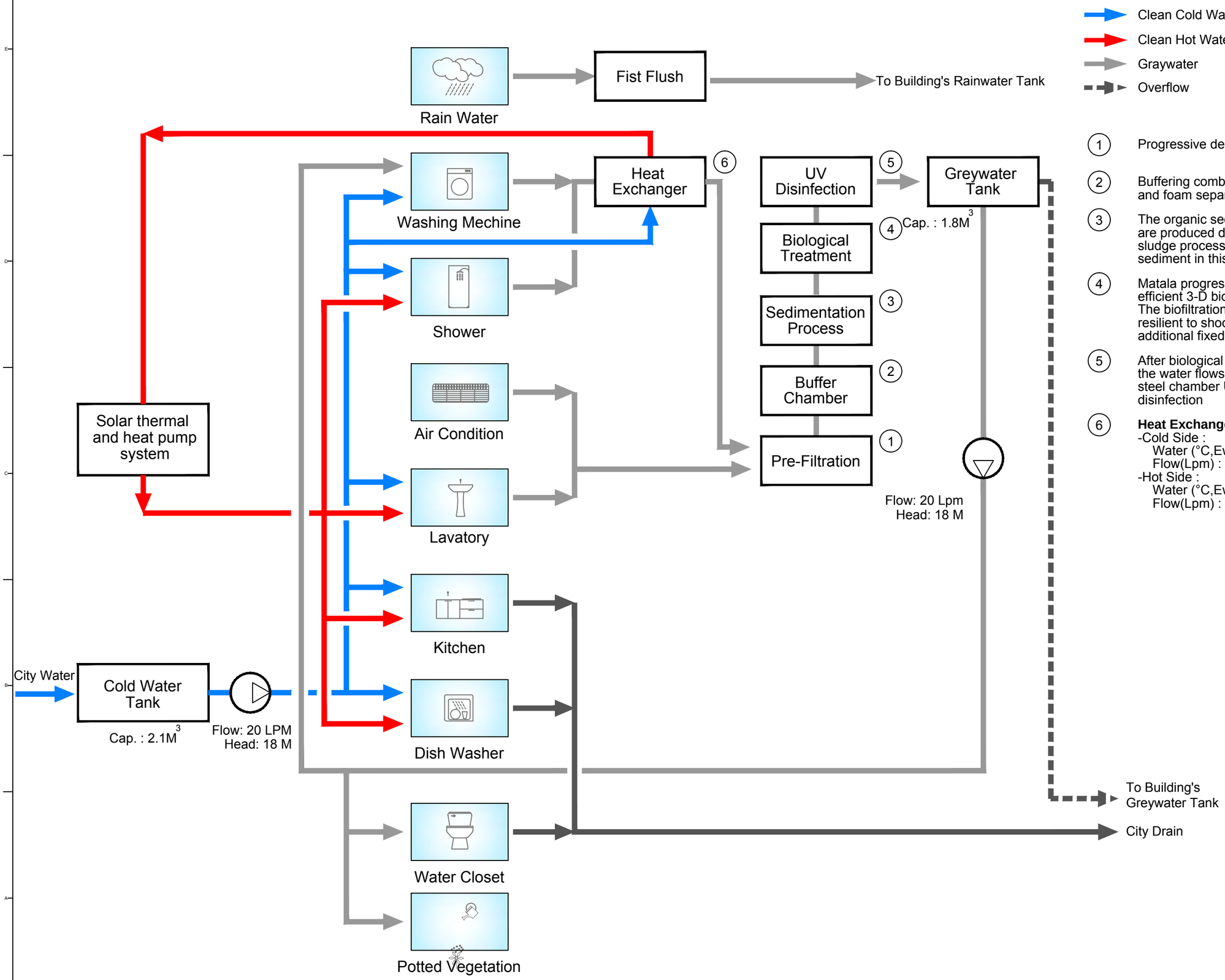

1. Progressive depth filtration
2. Buffering combining active sludge and foam separation
3. The organic sediments which are produced during the active sludge process obtain further sediment in this tank
4. Matala progressive biofiltration efficient 3-D biofiltration. The biofiltration process is very resilient to shock loads with additional fixed biofilter skimmers
5. After biological treatment, the water flows through a stainless steel chamber UV-C system for disinfection
6. **Heat Exchanger**
   -Cold Side :
   Water (°C,Ewt / Lwt) : 15 / 23
   Flow(Lpm) : 18.75
   -Hot Side :
   Water (°C,Ewt / Lwt) : 33 / 23
   Flow(Lpm) : 15

Solar Decathlon Europe

Project: ORCHID HOUSE

Institution: 國立交通大學 National Chiao Tung University

NCTU Architecture 國立交通大學建築研究所

Team Name: NCTU/UNICODE
Address: 1001 Ta-Hsueh Road Hsinchu City 30010 Taiwan
Contact: www.sde.tw

Consultants: UIS United Integrated Services

Note:

Mark	Date	Description
DN	2013/04/01	SD Submission
DN	2013/07/01	DDc Submission
ST	2013/11/01	DD Submission
ST	2014/03/03	CD Submission
ST	2014/04/30	CD Submission
ST	2014/06/02	CD Submission

Drawn by	MH
Checked by	-
Scale	-
Unit	-

DWG. Title: SCHEMATIC DIAGRAM IN TAIWAN

DWG. No. PL-101

PAGE 170

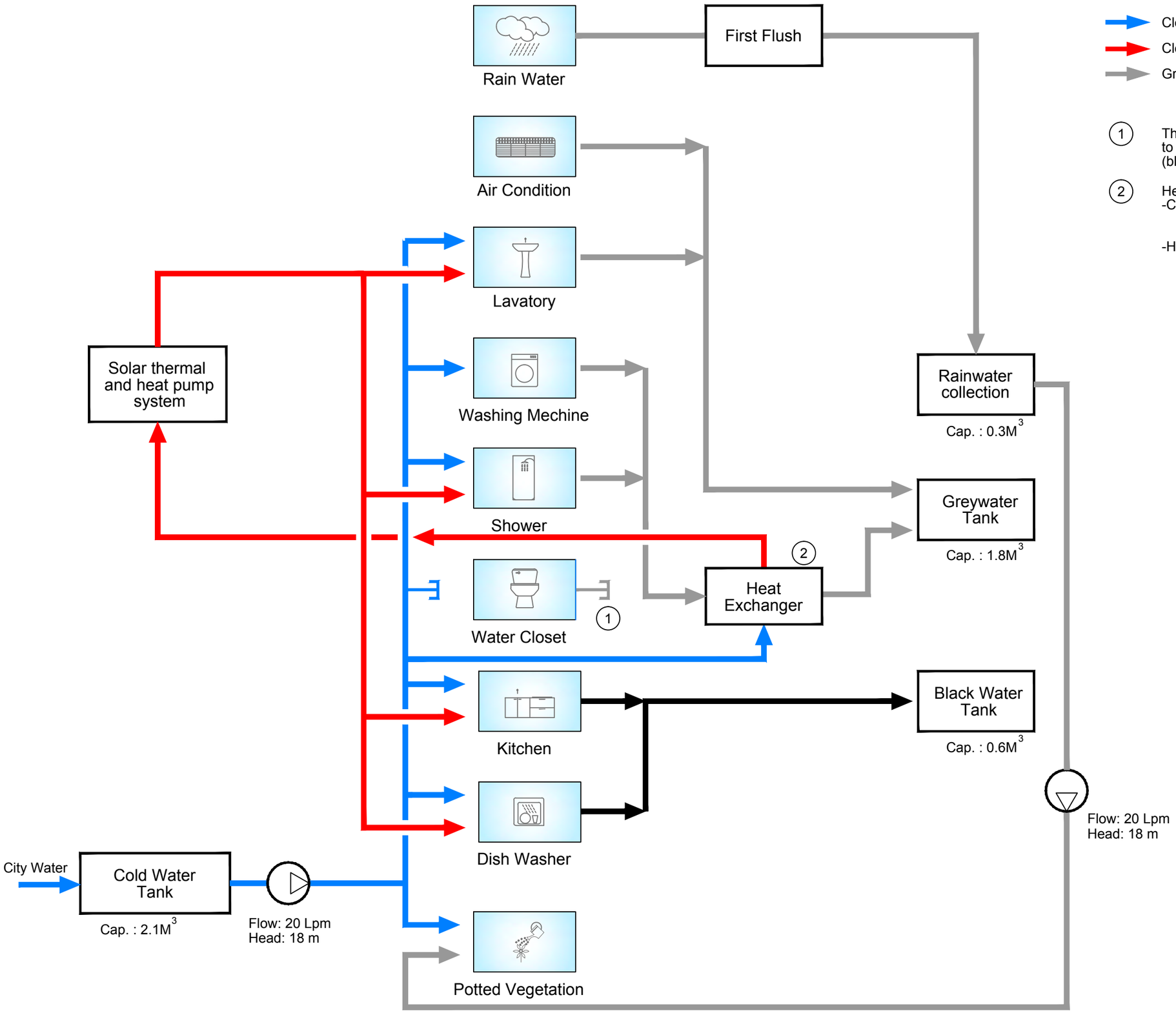

Clean Cold Water

Clean Hot Water

Graywater

1 The water closet is not connected to the sewage disposal system (black water tank) during the event.

2 Heat Exchanger
-Cold Side :
Water (°C,Ewt / Lwt) : 15 / 23
Flow(Lpm) : 18.75
-Hot Side :
Water (°C,Ewt / Lwt) : 33 / 23
Flow(Lpm) : 15

Solar Decathlon Europe

Project: ORCHID HOUSE

Institution: 國立交通大學 National Chiao Tung University

NCTU Architecture 國立交通大學建築研究所

Team Name: NCTU/UNICODE

Address: 1001 Ta-Hsueh Road Hsinchu City 30010 Taiwan

Contact: www.sde.tw

Consultants: uis United Integrated Services

Note:

Mark	Date	Description
DN	2013/04/01	SD Submission
DN	2013/07/01	DDc Submission
ST	2013/11/01	DD Submission
ST	2014/03/03	CD Submission
ST	2014/04/30	CD Submission
ST	2014/06/02	CD Submission

Drawn by MH

Checked by -

Scale -

Unit -

DWG. Title: SCHEMATIC DIAGRAM IN COMPETITION

DWG. No. PL-102

PAGE 171

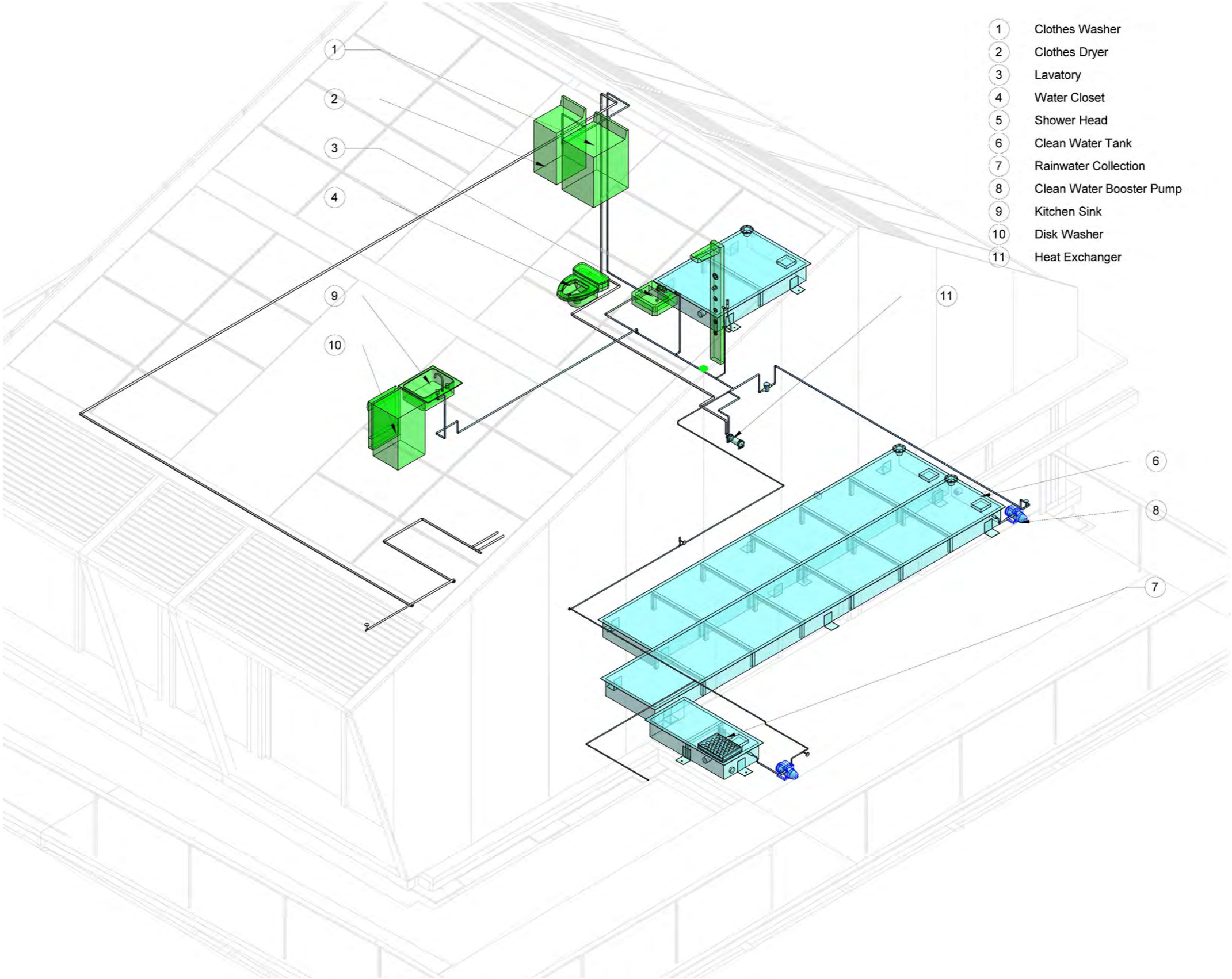

1 Clothes Washer
2 Clothes Dryer
3 Lavatory
4 Water Closet
5 Shower Head
6 Clean Water Tank
7 Rainwater Collection
8 Clean Water Booster Pump
9 Kitchen Sink
10 Disk Washer
11 Heat Exchanger

Solar Decathlon Europe

Project: ORCHID HOUSE

Institution: 國立交通大學 National Chiao Tung University

NCTU Architecture 國立交通大學建築研究所

Team Name: NCTU/UNICODE
Address: 1001 Ta-Hsueh Road Hsinchu City 30010 Taiwan
Contact: www.sde.tw

Consultants: uis United Integrated Services

Note:

Mark	Date	Description
DN	2013/04/01	SD Submission
DN	2013/07/01	DDc Submission
ST	2013/11/01	DD Submission
ST	2014/03/03	CD Submission
ST	2014/04/30	CD Submission
ST	2014/06/02	CD Submission

Drawn by: MH
Checked by: -
Scale: -
Unit: -

DWG. Title: SUPPLY AND REMOVAL CLEAN WATER ISOMETRIC

DWG. No. PL-201

PAGE 172

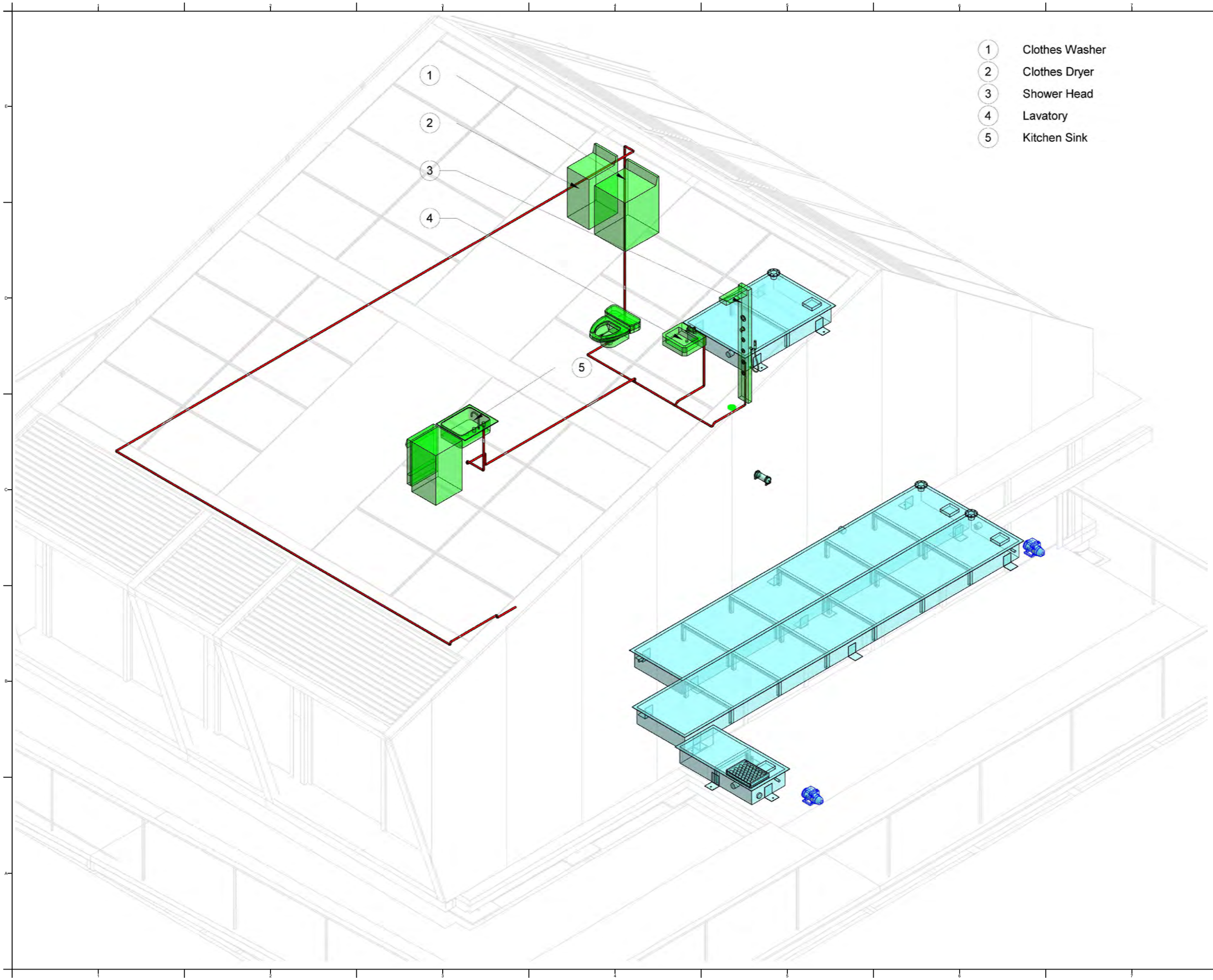

1 Clothes Washer
2 Clothes Dryer
3 Shower Head
4 Lavatory
5 Kitchen Sink

Solar Decathlon Europe

Project: ORCHID HOUSE

Institution: 國立交通大學 National Chiao Tung University

NCTU Architecture 國立交通大學建築研究所

Team Name: NCTU/UNICODE
Address: 1001 Ta-Hsueh Road
Hsinchu City 30010
Taiwan
Contact: www.sde.tw

Consultants: uis United Integrated Services

Note:

Mark	Date	Description
DN	2013/04/01	SD Submission
DN	2013/07/01	DDc Submission
ST	2013/11/01	DD Submission
ST	2014/03/03	CD Submission
ST	2014/04/30	CD Submission
ST	2014/06/02	CD Submission

Drawn by	MH
Checked by	-
Scale	-
Unit	mm

DWG. Title

SUPPLY AND REMOVAL HOT WATER ISOMETRIC

DWG. No. PL-202

PAGE 173

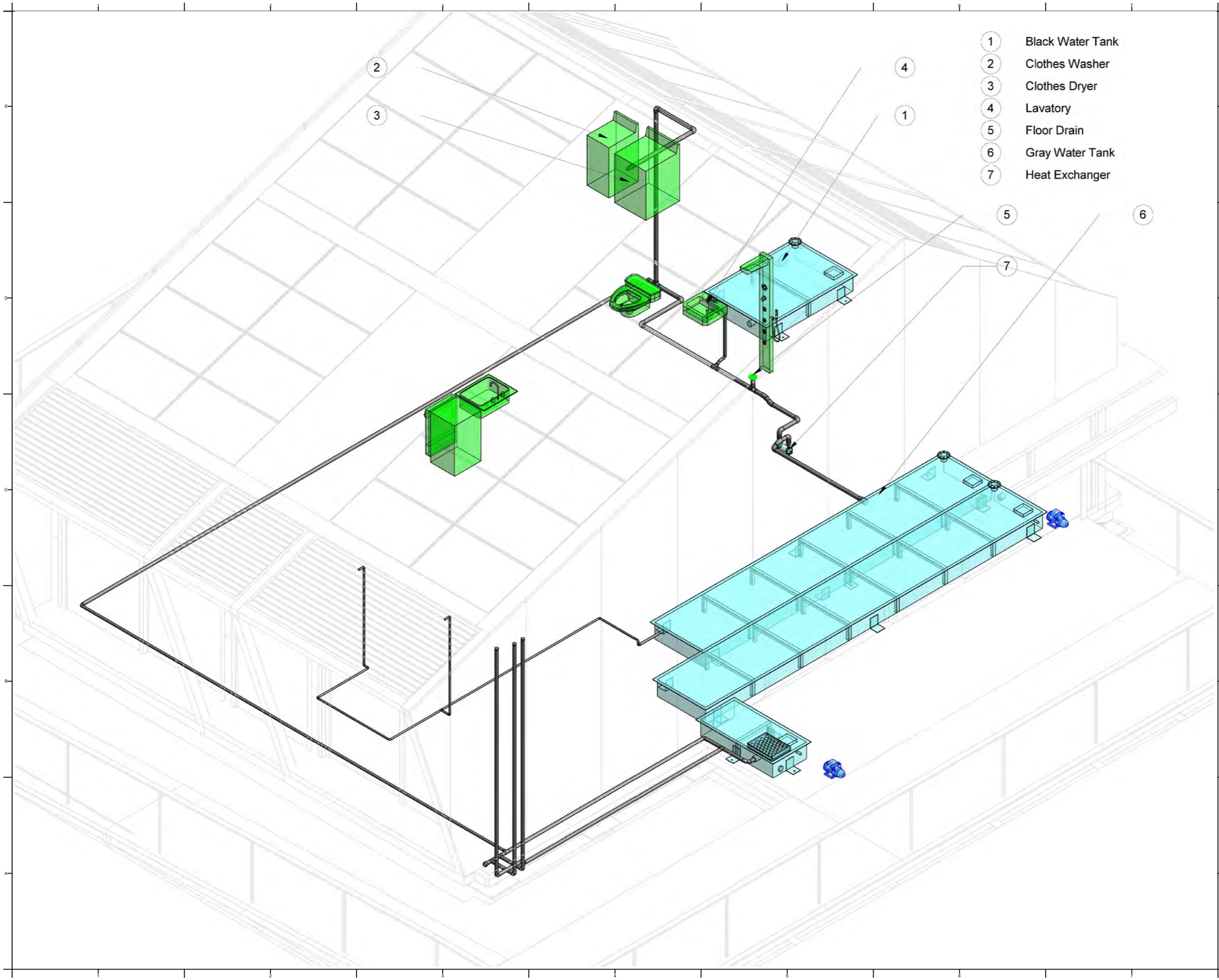

Solar Decathlon Europe

Project: ORCHID HOUSE

Institution: 國立交通大學 National Chiao Tung University

NCTU Architecture 國立交通大學建築研究所

Team Name: NCTU/UNICODE

Address: 1001 Ta-Hsueh Road
Hsinchu City 30010
Taiwan

Contact: www.sde.tw

Consultants: uis United Integrated Services

Note:

Mark	Date	Description
DN	2013/04/01	SD Submission
DN	2013/07/01	DDc Submission
ST	2013/11/01	DD Submission
ST	2014/03/03	CD Submission
ST	2014/04/30	CD Submission
ST	2014/06/02	CD Submission

Drawn by	MH
Checked by	-
Scale	-
Unit	-

DWG. Title: GRAY WATER ISOMETRIC

DWG. No. PL-211

PAGE 174

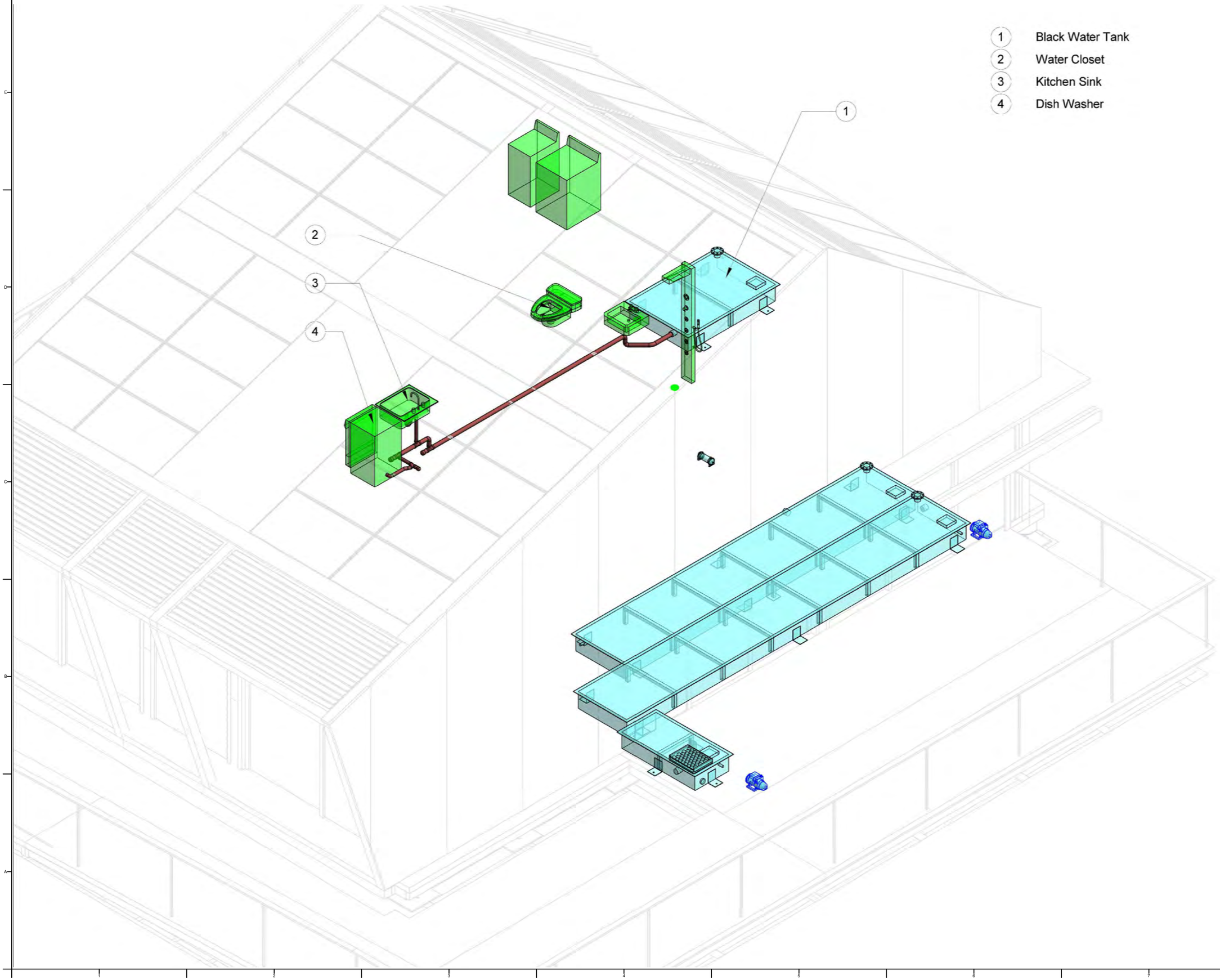

Solar Decathlon Europe

Project: ORCHID HOUSE

Institution: 國立交通大學 National Chiao Tung University

NCTU Architecture 國立交通大學建築研究所

Team Name: NCTU/UNICODE

Address: 1001 Ta-Hsueh Road
Hsinchu City 30010
Taiwan

Contact: www.sde.tw

Consultants: uis United Integrated Services

Note:

Mark	Date	Description
DN	2013/04/01	SD Submission
DN	2013/07/01	DDc Submission
ST	2013/11/01	DD Submission
ST	2014/03/03	CD Submission
ST	2014/04/30	CD Submission
ST	2014/06/02	CD Submission

Drawn by: MH

Checked by: -

Scale: -

Unit: -

DWG. Title: DRAIN/WASTE/VENT ISOMETRIC

DWG. No.: PL-221

PAGE: 175

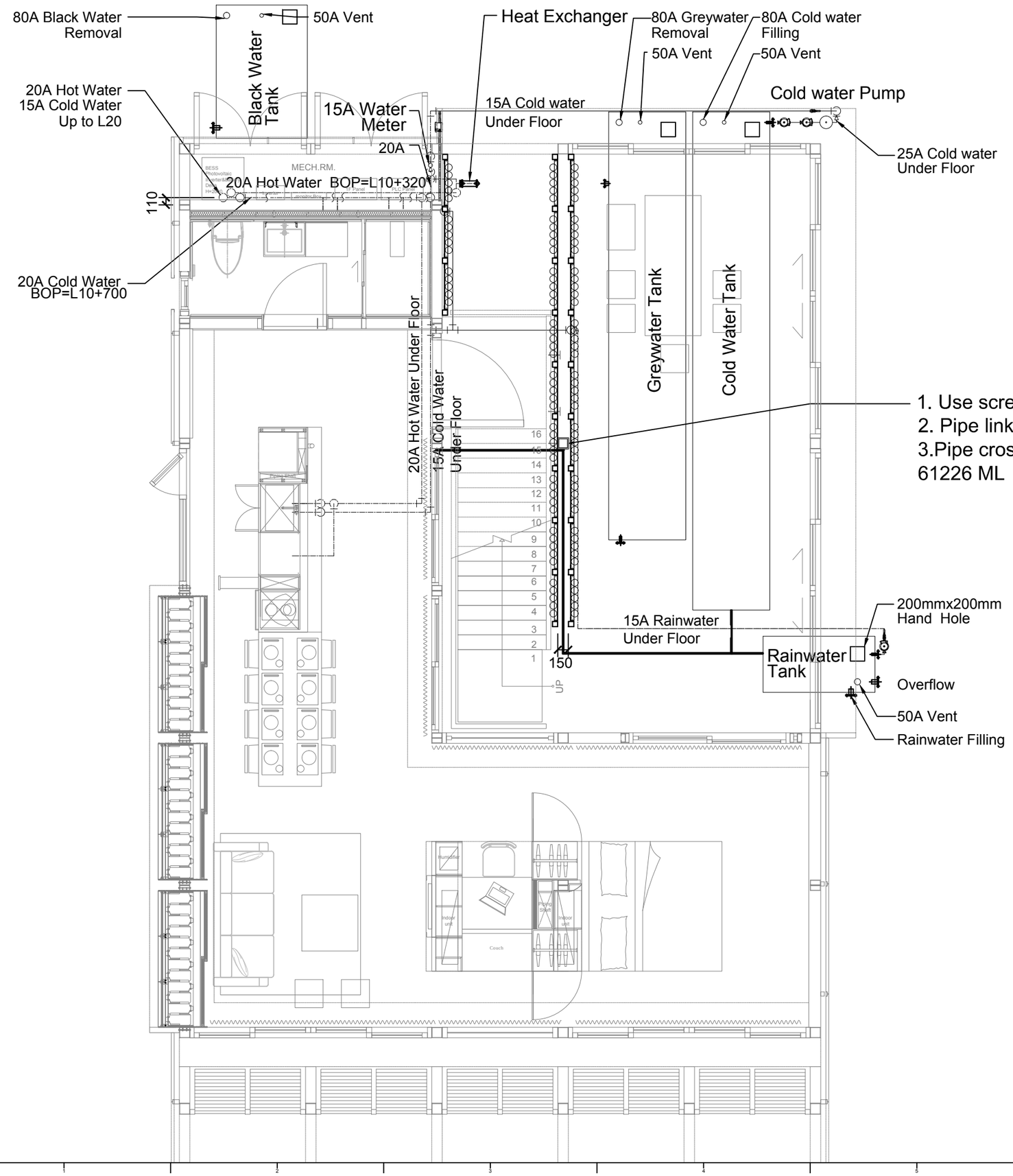

1. Use screws to secure the pipes on this structure
2. Pipe link with irrigation system at 620 cm high
3.Pipe cross-sectional area（4.7cm²） x lenght （13553 cm）
61226 ML （irrigation）

0 1 2 5 METER

Solar Decathlon Europe

Project: ORCHID HOUSE

Institution: 國立交通大學 National Chiao Tung University

NCTU Architecture 國立交通大學建築研究所

Team Name: NCTU/UNICODE
Address: 1001 Ta-Hsueh Road Hsinchu City 30010 Taiwan
Contact: www.sde.tw

Consultants:

Note:

Mark	Date	Description
DN	2013/04/01	SD Submission
DN	2013/07/01	DDc Submission
ST	2013/11/01	DD Submission
ST	2014/03/03	CD Submission
ST	2014/04/30	CD Submission
ST	2014/06/02	CD Submission

Drawn by	JL
Checked by	DN
Scale	1:60
Unit	mm

DWG. Title: GREEN CORE IRRIGATION SYSTEM PLAN

DWG. No. PL-301

PAGE 176

1. Use screws to secure the pipes on this structure
2. Pipe link with irrigation system at 620 cm high
3.Pipe cross-sectional area (4.7cm²) x lenght (13027 cm) = 61226 ML (irrigation)

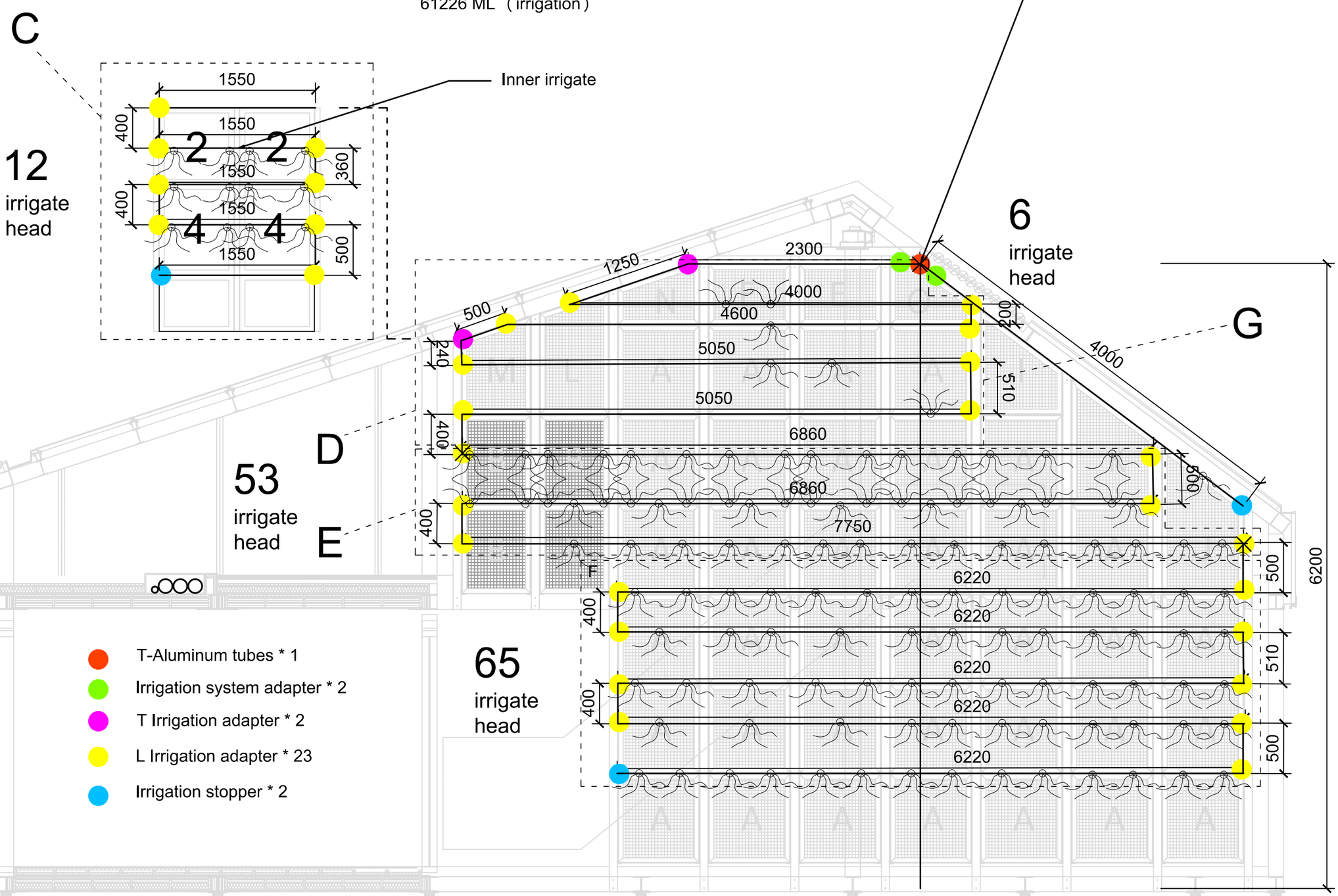

Solar Decathlon Europe

Project: ORCHID HOUSE

Institution: 國立交通大學 National Chiao Tung University

NCTU Architecture 國立交通大學建築研究所

Team Name: NCTU/UNICODE
Address: 1001 Ta-Hsueh Road Hsinchu City 30010 Taiwan
Contact: www.sde.tw

Consultants:

Note:

Mark	Date	Description
DN	2013/04/01	SD Submission
DN	2013/07/01	DDc Submission
ST	2013/11/01	DD Submission
ST	2014/03/03	CD Submission
ST	2014/04/30	CD Submission
ST	2014/06/02	CD Submission

Drawn by	JL
Checked by	DN
Scale	1:40
Unit	mm

DWG. Title: GREEN CORE IRRIGATION SYSTEM ELEVATION 1

DWG. No. PL-302

PAGE 177

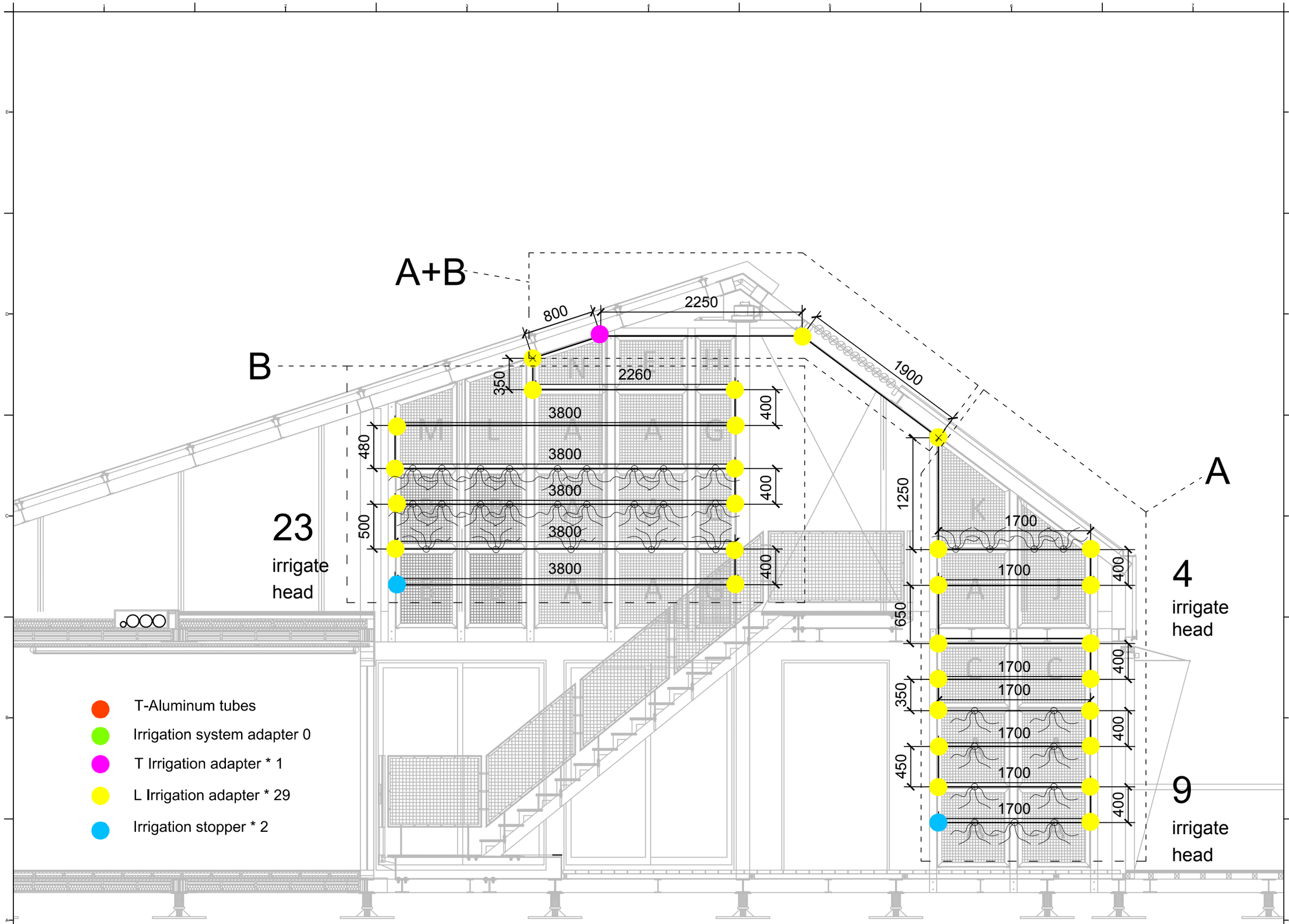

Solar Decathlon Europe

Project: ORCHID HOUSE

Institution: 國立交通大學 National Chiao Tung University

NCTU Architecture 國立交通大學建築研究所

Team Name:	NCTU/UNICODE
Address:	1001 Ta-Hsueh Road Hsinchu City 30010 Taiwan
Contact:	www.sde.tw

Consultants:

Note:

Mark	Date	Description
DN	2013/04/01	SD Submission
DN	2013/07/01	DDc Submission
ST	2013/11/01	DD Submission
ST	2014/03/03	CD Submission
ST	2014/04/30	CD Submission
ST	2014/06/02	CD Submission

Drawn by	JL
Checked by	DN
Scale	1:40
Unit	mm

DWG. Title
GREEN CORE
IRRIGATION SYSTEM
ELEVATION 2

DWG. No. PL-303

PAGE 178

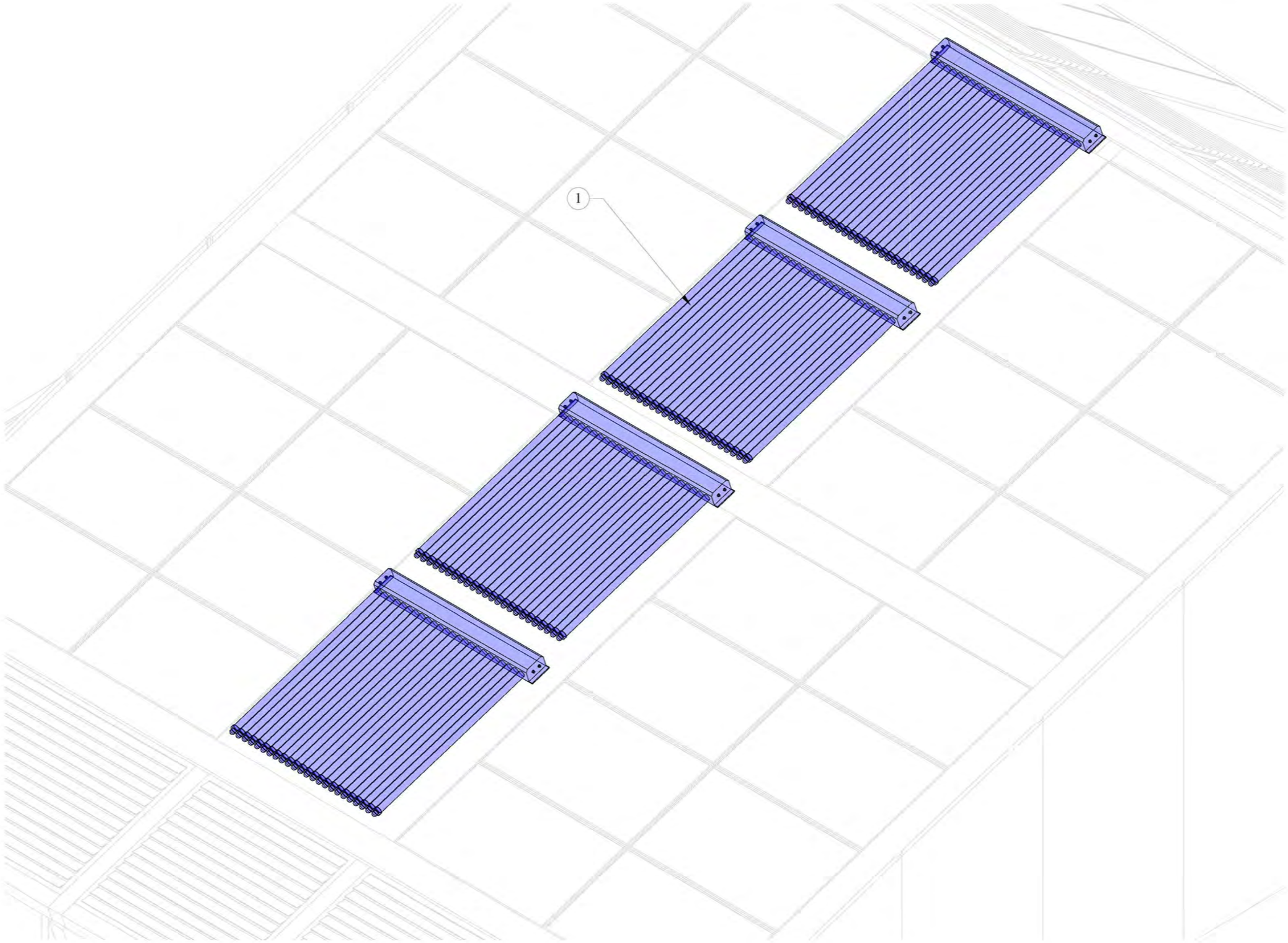

Solar Decathlon Europe

Project: ORCHID HOUSE

Institution: 國立交通大學 National Chiao Tung University

NCTU Architecture 國立交通大學建築研究所

Team Name: NCTU/UNICODE

Address: 1001 Ta-Hsueh Road
Hsinchu City 30010
Taiwan

Contact: www.sde.tw

Consultants: uis United Integrated Services

Note:

Mark	Date	Description
DN	2013/04/01	SD Submission
DN	2013/07/01	DDc Submission
ST	2013/11/01	DD Submission
ST	2014/03/03	CD Submission
ST	2014/04/30	CD Submission
ST	2014/06/02	CD Submission

Drawn by	BB
Checked by	CHUNG
Scale	-
Unit	-

DWG. Title

SOLAR WATER PLAN

DWG. No.	PAGE
SW-001	179

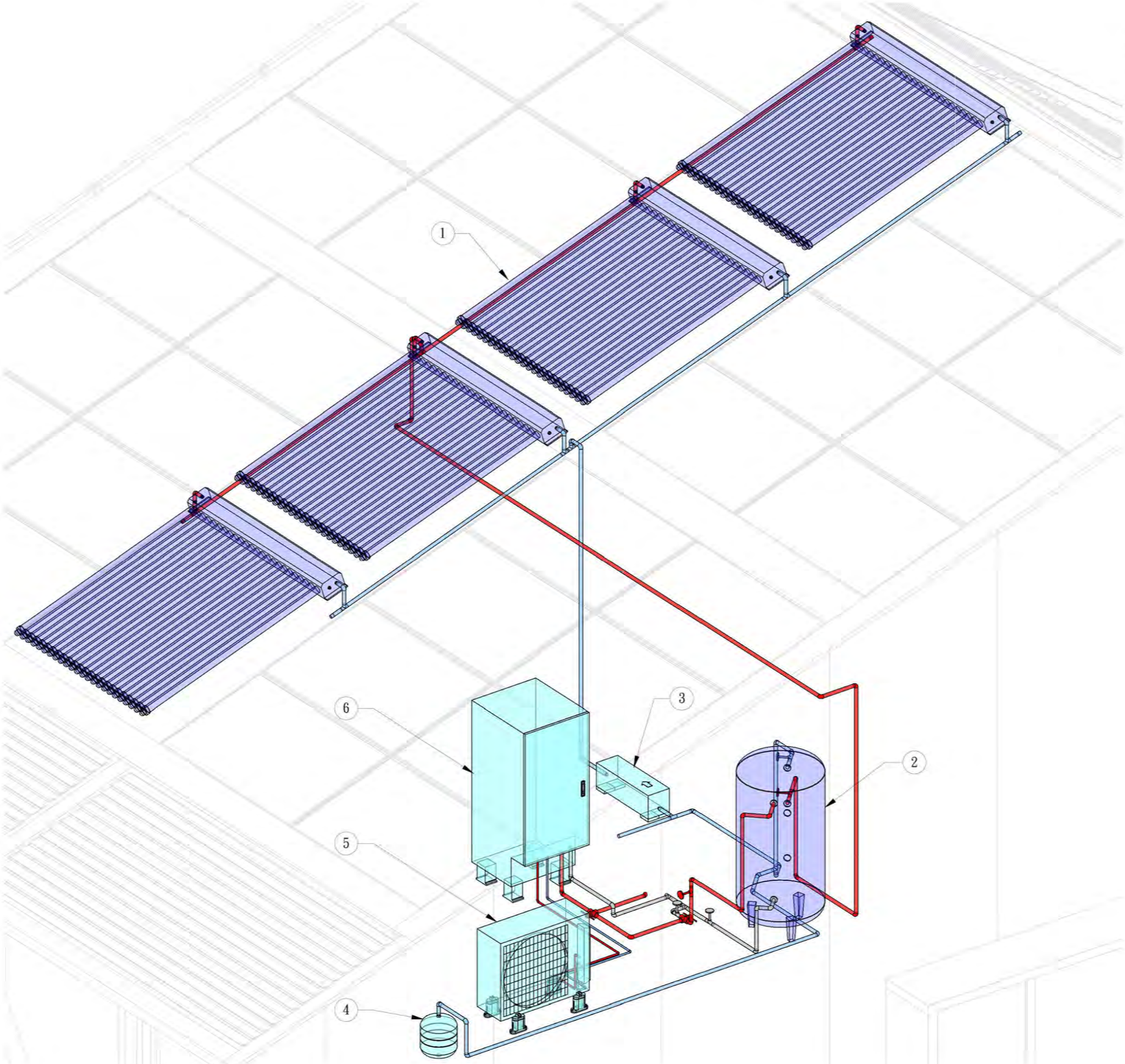

1. Solar Thermal Collector
2. Hot Water Storage Tank
3. Pump Station
4. Expansion Tank 1
5. CO2 Heat Pump Package 2
6. CO2 Heat Pump Package 1

Solar Decathlon Europe

Project: ORCHID HOUSE

Institution: 國立交通大學 National Chiao Tung University

NCTU Architecture 國立交通大學建築研究所

Team Name: NCTU/UNICODE

Address: 1001 Ta-Hsueh Road
Hsinchu City 30010
Taiwan

Contact: www.sde.tw

Consultants: uis United Integrated Services

Note:

Mark	Date	Description
DN	2013/04/01	SD Submission
DN	2013/07/01	DDc Submission
ST	2013/11/01	DD Submission
ST	2014/03/03	CD Submission
ST	2014/04/30	CD Submission
ST	2014/06/02	CD Submission

Drawn by	BB
Checked by	CHUNG
Scale	-
Unit	-

DWG. Title: SOLAR WATER ISOMETRIC

DWG. No. SW-101

PAGE 180

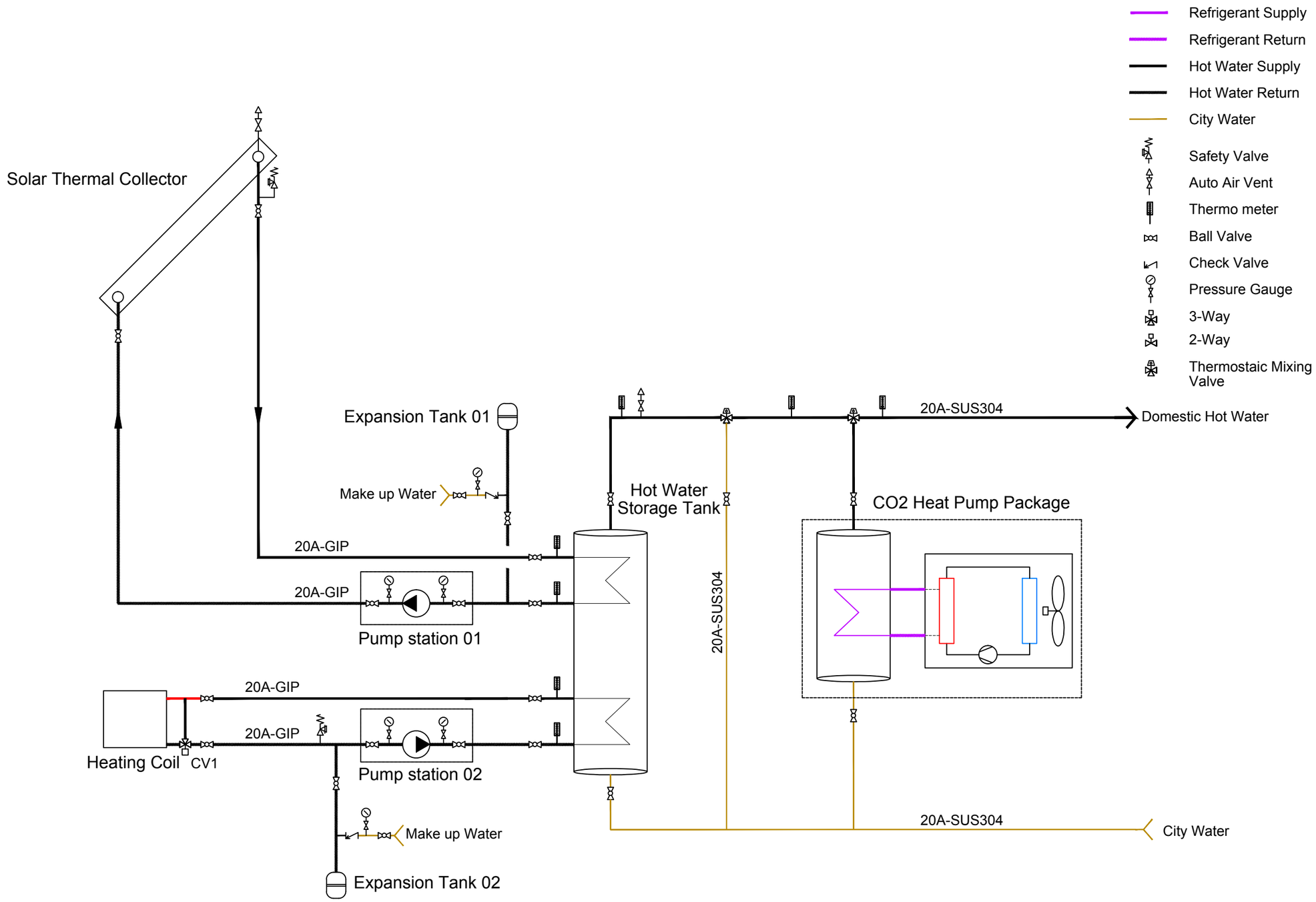

Solar Decathlon Europe

Project: ORCHID HOUSE

Institution: 國立交通大學 National Chiao Tung University

NCTU Architecture 國立交通大學建築研究所

Team Name: NCTU/UNICODE

Address: 1001 Ta-Hsueh Road Hsinchu City 30010 Taiwan

Contact: www.sde.tw

Consultants: UIS United Integrated Services

Note:

Mark	Date	Description
DN	2013/04/01	SD Submission
DN	2013/07/01	DDc Submission
ST	2013/11/01	DD Submission
ST	2014/03/03	CD Submission
ST	2014/04/30	CD Submission
ST	2014/06/02	CD Submission

Drawn by: BB

Checked by: CHUNG

Scale: -

Unit: -

DWG. Title: SOLAR WATER SCHEMATIC

DWG. No.: SW-201

PAGE: 181

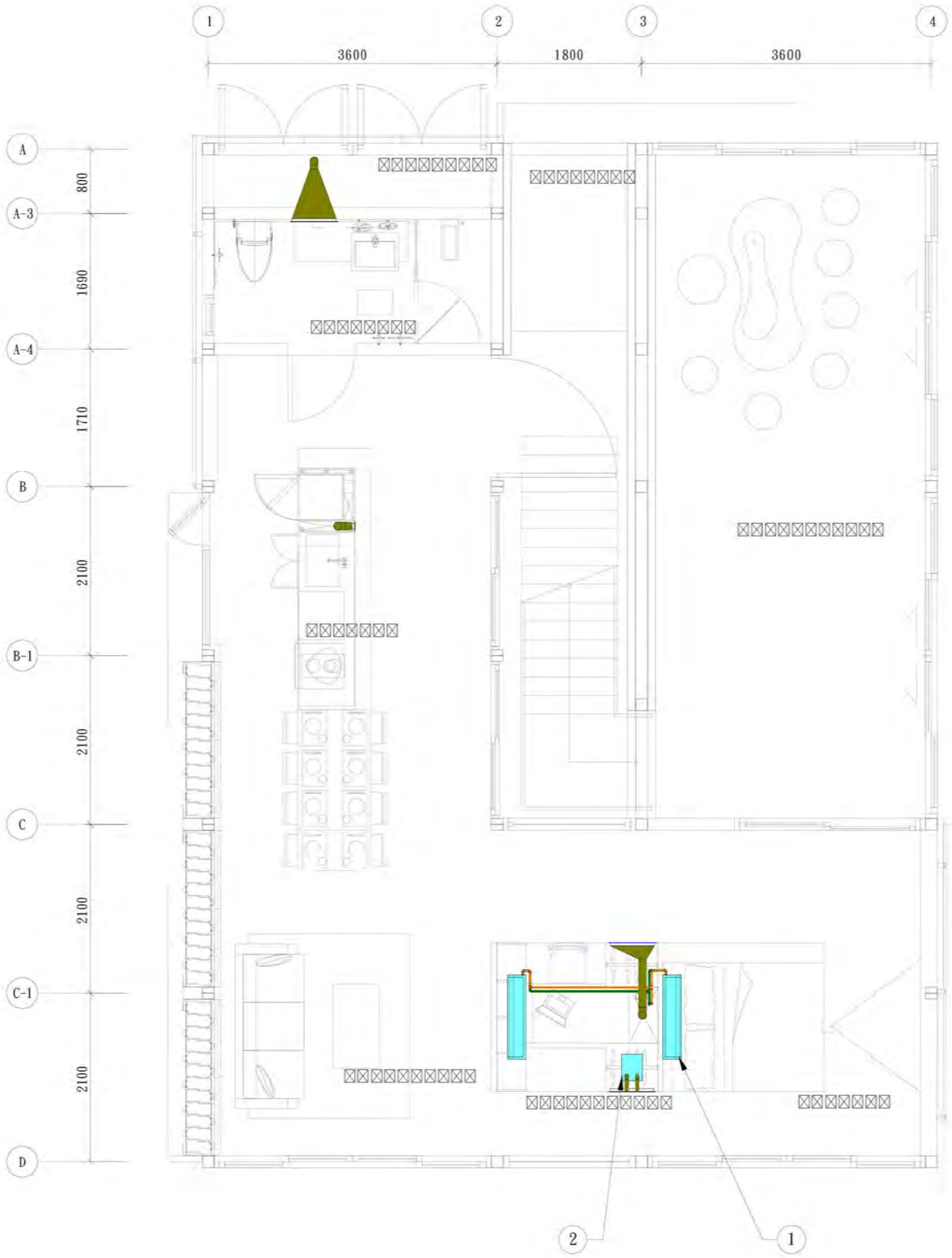

Refrigerant Supply

Refrigerant Return

Duct

1 Indoor Unit of Heat Pump

2 Ultrasonic Humidifier

Solar Decathlon Europe

Project: ORCHID HOUSE

Institution: 國立交通大學 National Chiao Tung University

NCTU Architecture 國立交通大學建築研究所

Team Name: NCTU/UNICODE

Address: 1001 Ta-Hsueh Road Hsinchu City 30010 Taiwan

Contact: www.sde.tw

Consultants: uis United Integrated Services

Note:

Mark	Date	Description
DN	2013/04/01	SD Submission
DN	2013/07/01	DDc Submission
ST	2013/11/01	DD Submission
ST	2014/03/03	CD Submission
ST	2014/04/30	CD Submission
ST	2014/06/02	CD Submission

Drawn by	BB
Checked by	CHUNG
Scale	1:60
Unit	mm

DWG. Title

HVAC DISTRIBUTION PLAN GROUND LEVEL

DWG. No. ME-001

PAGE 182

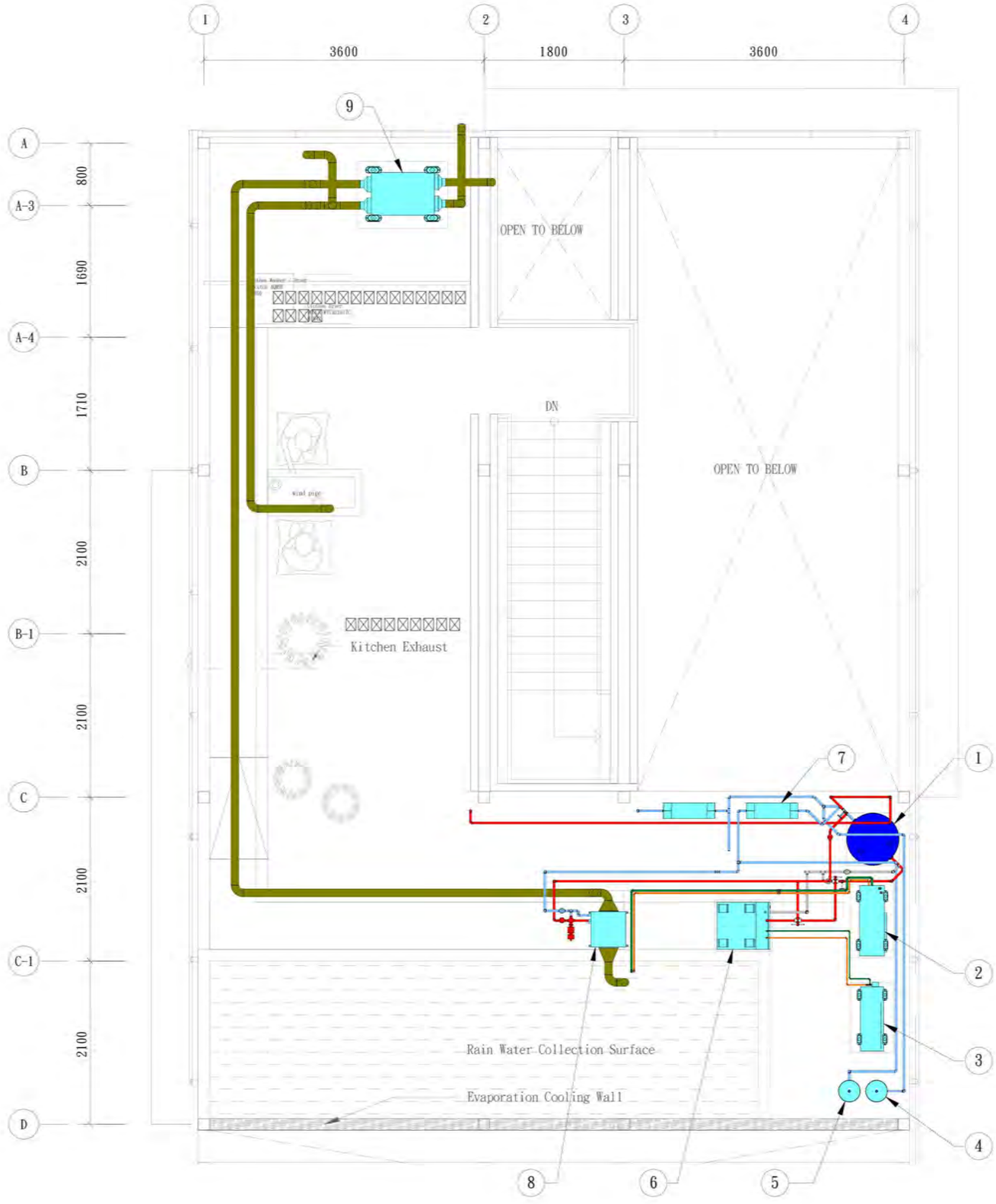

- Refrigerant Supply
- Refrigerant Return
- Hot Water Supply
- Hot Water Return
- City Water
- Duct

1. Hot Water Storage Tank
2. Heat Pump
3. CO2 Heat Pump Package1
4. Expansion Tank 1
5. Expansion Tank 2
6. CO2 Heat Pump Package 2
7. Pump Station
8. Heating Coil
9. Heat Reclaim Ventilator

Solar Decathlon Europe

Project: ORCHID HOUSE

Institution: 國立交通大學 National Chiao Tung University

NCTU Architecture 國立交通大學建築研究所

Team Name: NCTU/UNICODE
Address: 1001 Ta-Hsueh Road Hsinchu City 30010 Taiwan
Contact: www.sde.tw

Consultants: UIS United Integrated Services

Note:

Mark	Date	Description
DN	2013/04/01	SD Submission
DN	2013/07/01	DDc Submission
ST	2013/11/01	DD Submission
ST	2014/03/03	CD Submission
ST	2014/04/30	CD Submission
ST	2014/06/02	CD Submission

Drawn by: BB
Checked by: CHUNG
Scale: 1:60
Unit: mm

DWG. Title: HVAC DISTRIBUTION PLAN MEZZANINE LEVEL

DWG. No.: ME-002

PAGE: 183

Outdoor Unit of Cooling/Heating Heat Pump

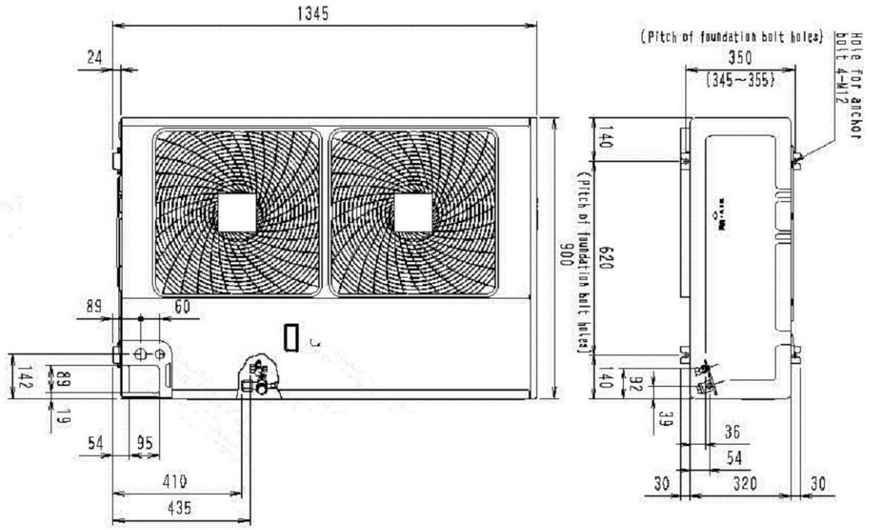

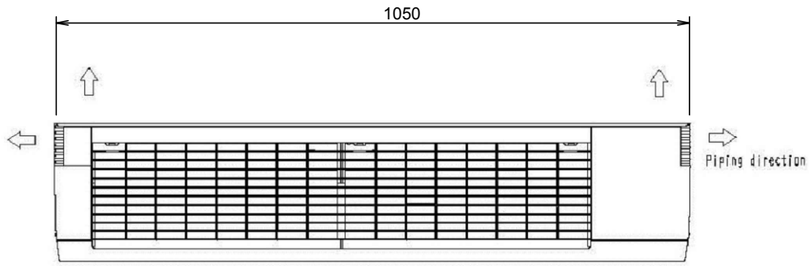

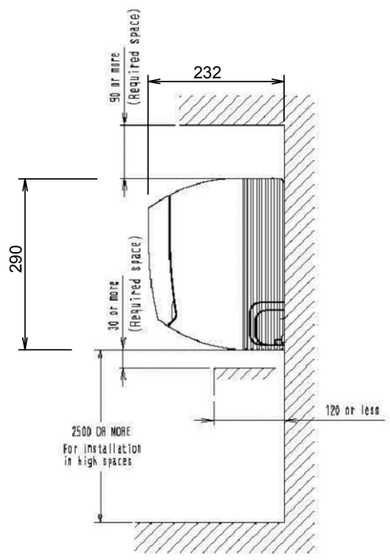

Name	Outdoor Unit of Cooling/Heating Heat Pump
Service	HVAC Cooling and Heating
Type	Heat Pump
Cooling Capacity	11.2 KW
Heating Capacity	12.5 KW
COP	Cooling = 3.8 Heating = 3.82
EER	Cooling = 4.4 Heating = 4.4
Electrical Power Supply	230 V
Frequency	50 HZ
Power Consumption	KW Cooling = 2.95 Heating = 3.27
Refrigerant	R-410A

Test condition for outdoor unit:

1. Cooling Condition : Indoor Temperature 27°C DB / 19°C WB
   Outdoor Temperature 35°C DB
2. Heating Condition : Indoor Temperature 20°C DB
   Outdoor Temperature 7°C DB / 6°C WB

Name	Indoor Unit of Heat Pump
Service	Room Heating and Cooling
Type	Wall Mounted
Quantity	2
Cooling Capacity	4.5 KW
Heating Capacity	5 KW
Fan Flow(High/Low)	12 / 9 m^3/min
Air Filter	Washable Resin Net

Solar Decathlon Europe

Project: ORCHID HOUSE

Institution: 國立交通大學 National Chiao Tung University

NCTU Architecture 國立交通大學建築研究所

Team Name: NCTU/UNICODE
Address: 1001 Ta-Hsueh Road Hsinchu City 30010 Taiwan
Contact: www.sde.tw

Consultants: uis United Integrated Services

Note:

Mark	Date	Description
DN	2013/04/01	SD Submission
DN	2013/07/01	DDc Submission
ST	2013/11/01	DD Submission
ST	2014/03/03	CD Submission
ST	2014/04/30	CD Submission
ST	2014/06/02	CD Submission

Drawn by: CHUNG
Checked by: CHUNG
Scale: -
Unit: -

DWG. Title: HVAC EQUIPMENTS 1

DWG. No.: ME-011

Heat Reclaim Ventilator

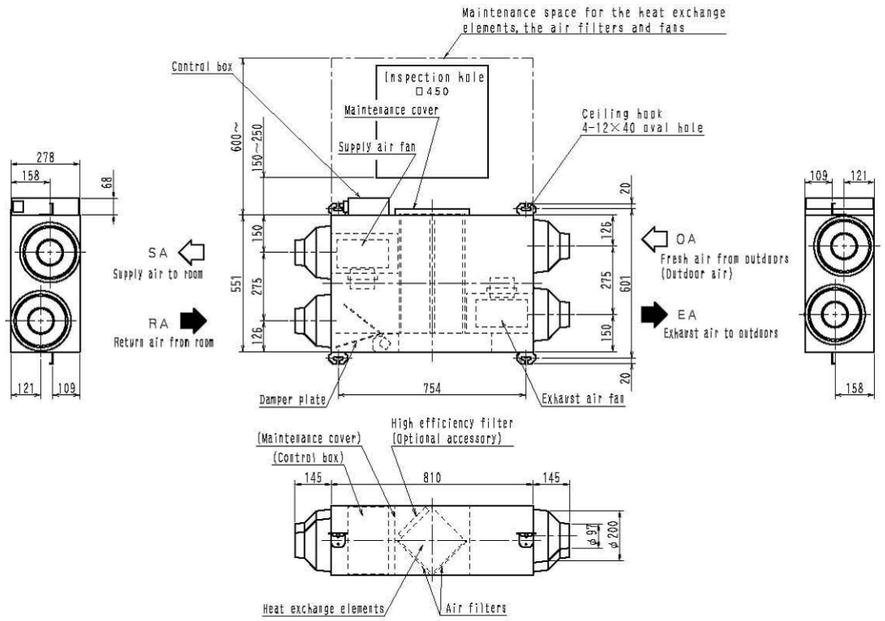

Name	Heat Reclaim Ventilator
Service	Room Active Ventilation
Temperature Exchange Efficiency	79%
Enthalpy Exchange Efficiency	
Cooling	66%
Heating	72%
Fan Air Flow Rate	150 m^3/h
Electrical Power Supply	230 V
Frequency	50 HZ
Power Consumption	30 W × 2

Test condition for exchange efficiency:

Condition	Indoor		Outdoor	
	°Cdb	rh%	°Cdb	rh%
Cooling	27	50	35	60
Heating	20	40	7	70

Solar Decathlon Europe

Project: ORCHID HOUSE

Institution: 國立交通大學 National Chiao Tung University

NCTU Architecture 國立交通大學建築研究所

Team Name: NCTU/UNICODE
Address: 1001 Ta-Hsueh Road Hsinchu City 30010 Taiwan
Contact: www.sde.tw

Consultants: uis United Integrated Services

Note:

Mark	Date	Description
DN	2013/04/01	SD Submission
DN	2013/07/01	DDc Submission
ST	2013/11/01	DD Submission
ST	2014/03/03	CD Submission
ST	2014/04/30	CD Submission
ST	2014/06/02	CD Submission

Drawn by: CHUNG
Checked by: CHUNG
Scale: -
Unit: -

DWG. Title: HVAC EQUIPMENTS 2

DWG. No.: ME-012

Winter - Night

Cold

- In cold-stream winter night.
- Space heating is required.
- Both heating coil and heat pump are operating.
- HRV is in HX mode.

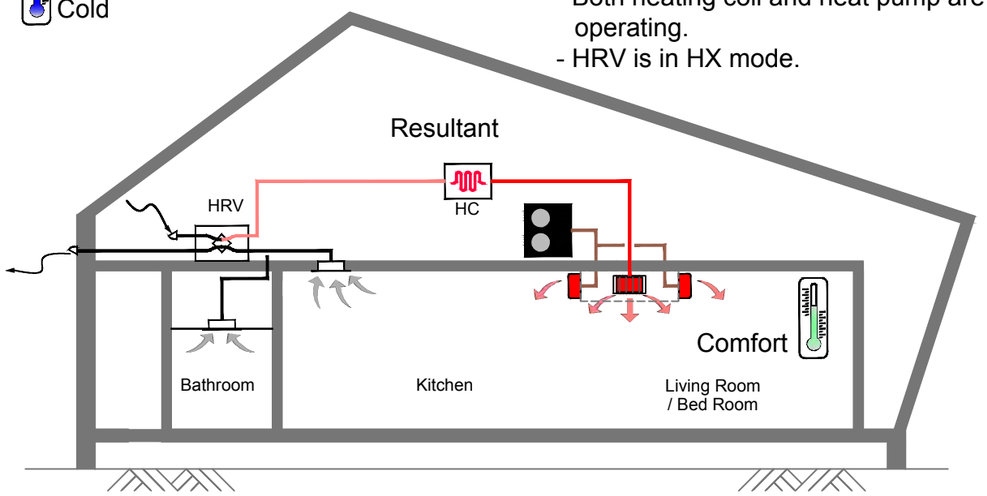

Winter

Cool

- Winter of freezing temperature.
- Space heating is required.
- Only heating coil is operating.
- HRV is in HX mode.

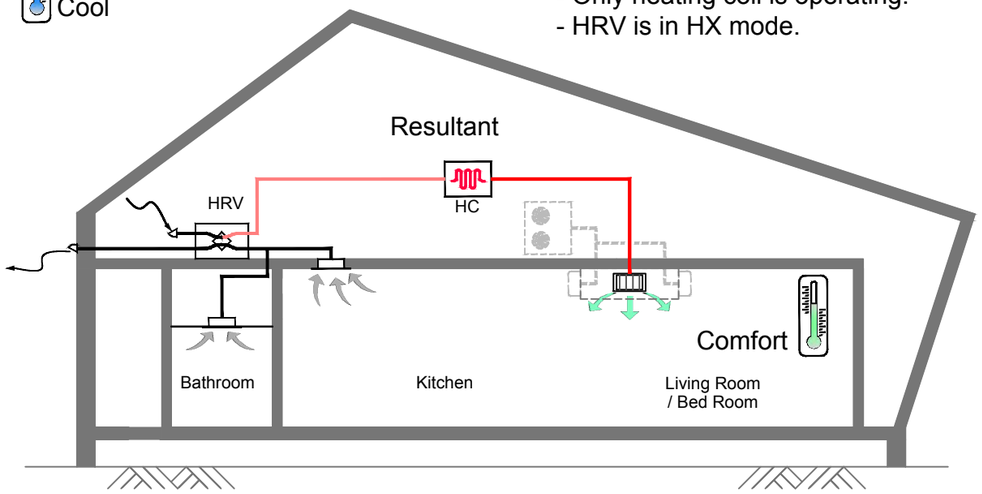

Legend:

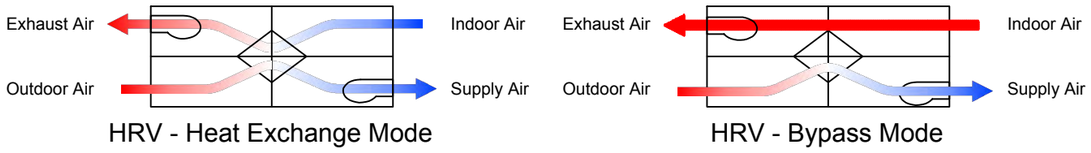

- Hot Air
- Warm Air
- Cool Air
- Cold Air
- Exhaust Air
- Refrigerant Pipe

Solar Decathlon Europe

Project: ORCHID HOUSE

Institution: 國立交通大學 National Chiao Tung University

NCTU Architecture 國立交通大學建築研究所

Team Name: NCTU/UNICODE
Address: 1001 Ta-Hsueh Road Hsinchu City 30010 Taiwan
Contact: www.sde.tw

Consultants: uis United Integrated Services

Note:

Mark	Date	Description
DN	2013/04/01	SD Submission
DN	2013/07/01	DDc Submission
ST	2013/11/01	DD Submission
ST	2014/03/03	CD Submission
ST	2014/04/30	CD Submission
ST	2014/06/02	CD Submission

Drawn by	CHUNG
Checked by	CHUNG
Scale	-
Unit	-

DWG. Title: HEATING

DWG. No. ME-021

PAGE 186

Summer - Day

Hot

- Typical of summer day.
- Space cooling is required.
- Heat pump is operating.
- HRV is in HX mode.

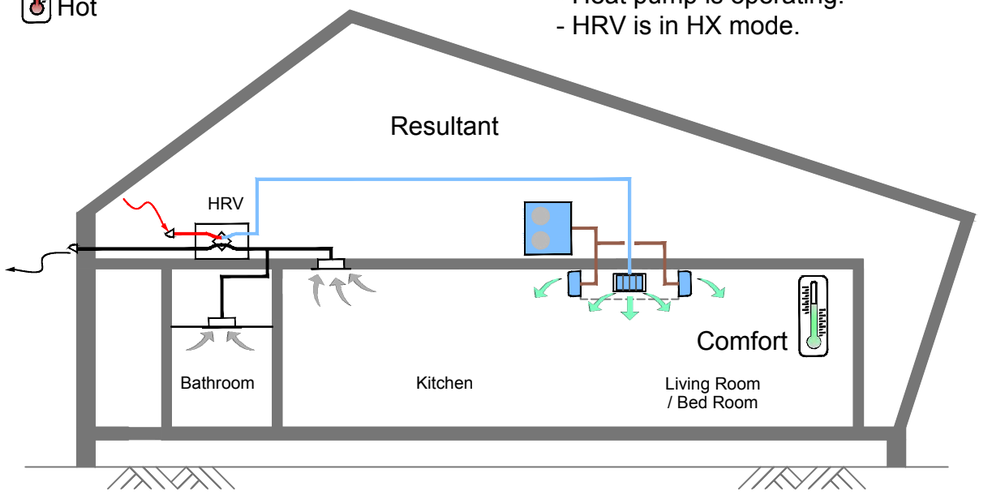

Spring - Night

Cool

- Outdoor temperature is much less than room temperature.
- Space cooling is still required.
- HRV is in bypass mode.

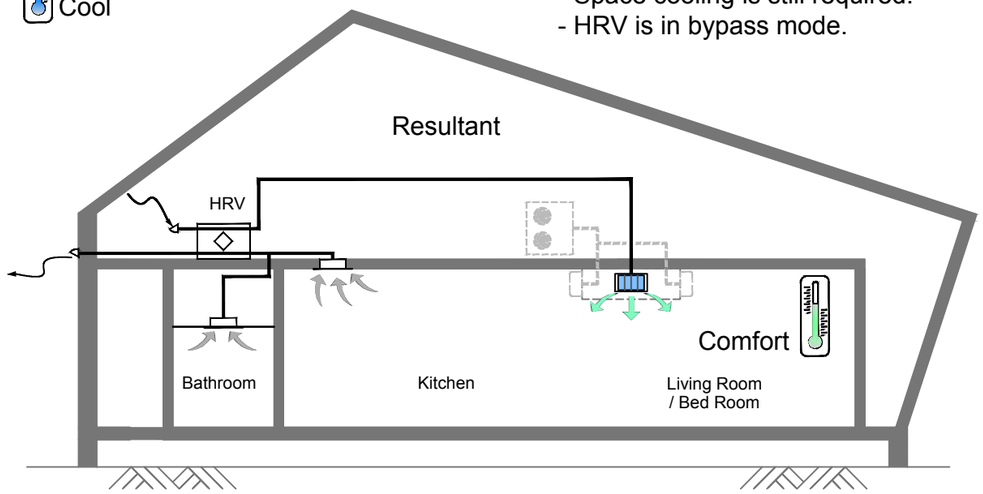

Summer - Early Morning

Cool

- Outdoor temperature is less than room temperature.
- Space cooling is required.
- Heat pump is operating.
- HRV is in bypass mode.

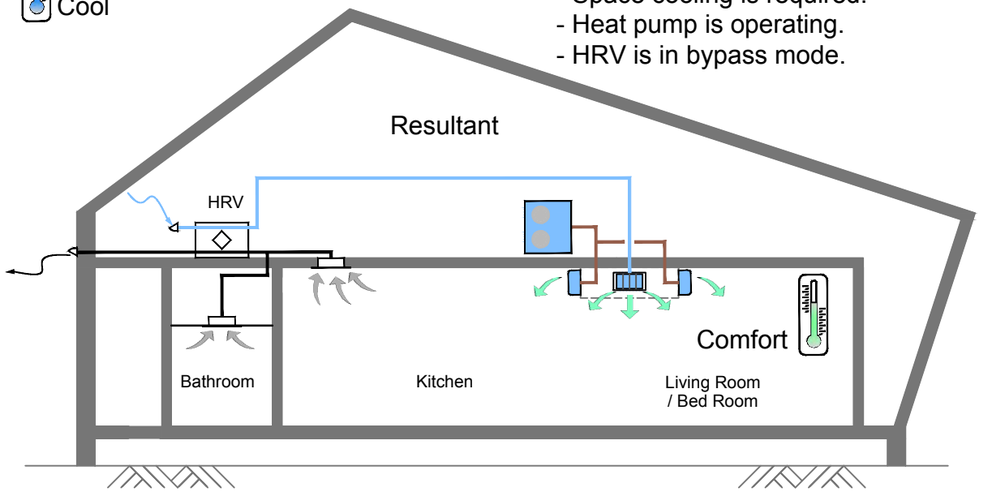

Spring - Day

Warm

- Outdoor temperature is higher than room temperature.
- Space cooling is required.
- HRV is in HX mode.

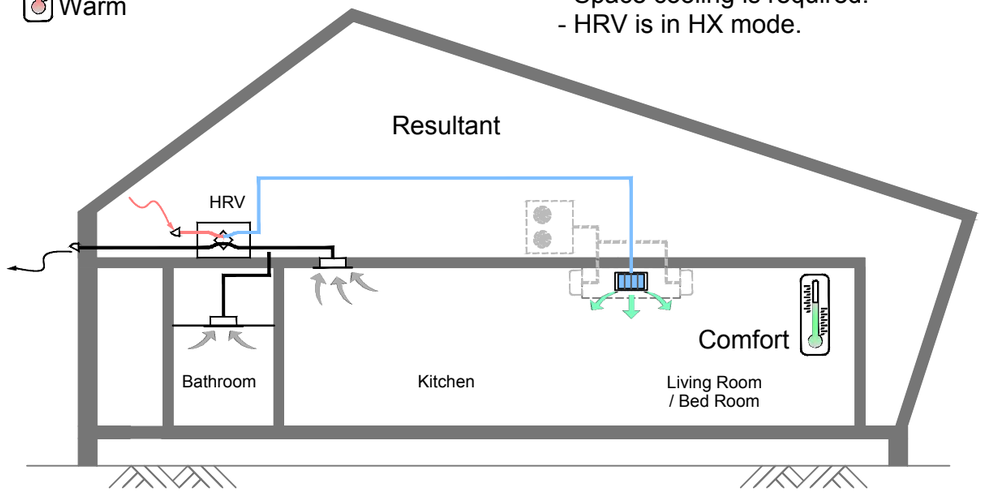

Legend:

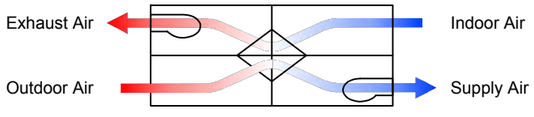

HRV - Heat Exchange Mode

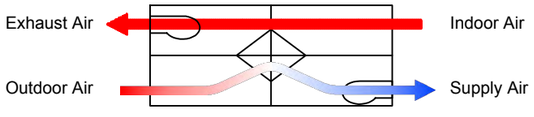

HRV - Bypass Mode

- Hot Air
- Warm Air
- Cool Air
- Cold Air
- Exhaust Air
- Refrigerant Pipe

Solar Decathlon Europe

Project: ORCHID HOUSE

Institution: 國立交通大學 National Chiao Tung University

NCTU Architecture 國立交通大學建築研究所

Team Name: NCTU/UNICODE

Address: 1001 Ta-Hsueh Road
Hsinchu City 30010
Taiwan

Contact: www.sde.tw

Consultants: uis United Integrated Services

Note:

Mark	Date	Description
DN	2013/04/01	SD Submission
DN	2013/07/01	DDc Submission
ST	2013/11/01	DD Submission
ST	2014/03/03	CD Submission
ST	2014/04/30	CD Submission
ST	2014/06/02	CD Submission

Drawn by	CHUNG
Checked by	CHUNG
Scale	-
Unit	-

DWG. Title: COOLING

DWG. No. ME-031

PAGE 187

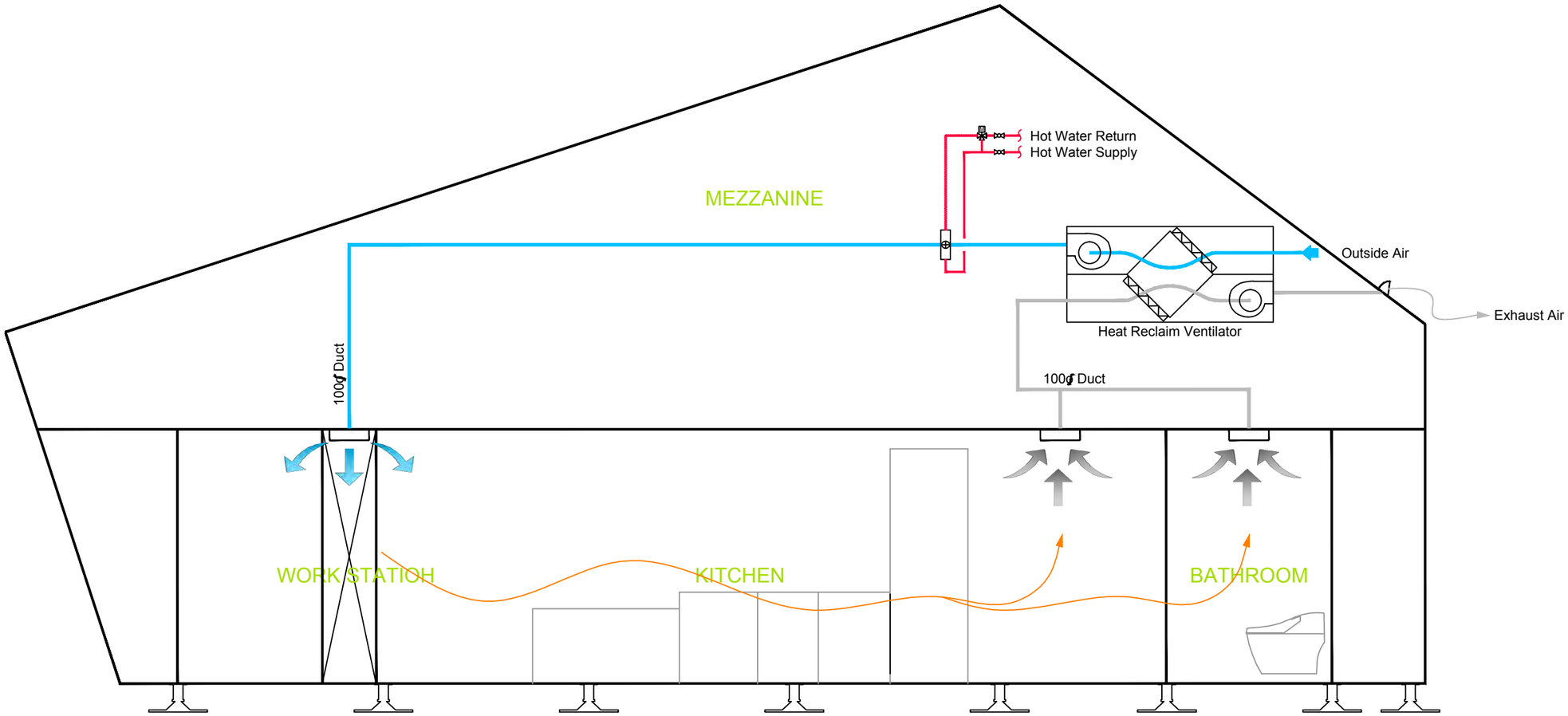

Solar Decathlon Europe

Project:

ORCHID HOUSE

Institution:

國立交通大學 National Chiao Tung University

NCTU Architecture 國立交通大學建築研究所

Team Name: NCTU/UNICODE

Address: 1001 Ta-Hsueh Road
Hsinchu City 30010
Taiwan

Contact: www.sde.tw

Consultants:

United Integrated Services

Note:

Mark	Date	Description
DN	2013/04/01	SD Submission
DN	2013/07/01	DDc Submission
ST	2013/11/01	DD Submission
ST	2014/03/03	CD Submission
ST	2014/04/30	CD Submission
ST	2014/06/02	CD Submission

Drawn by	CHUNG
Checked by	CHUNG
Scale	-
Unit	-

DWG. Title

VENTILATION 1

DWG. No. ME-041

PAGE 188

Summer - Day

Hot

- Outdoor temperature is much higher than room temperature.
- HRV is in HX mode.

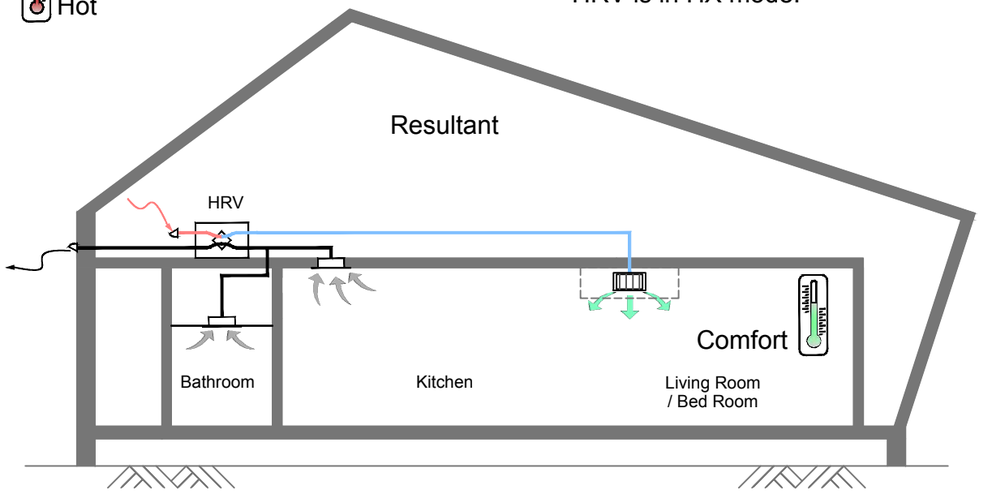

Spring - Day

Warm

- Outdoor temperature is higher than room temperature.
- Space cooling is required.
- HRV is in HX mode.

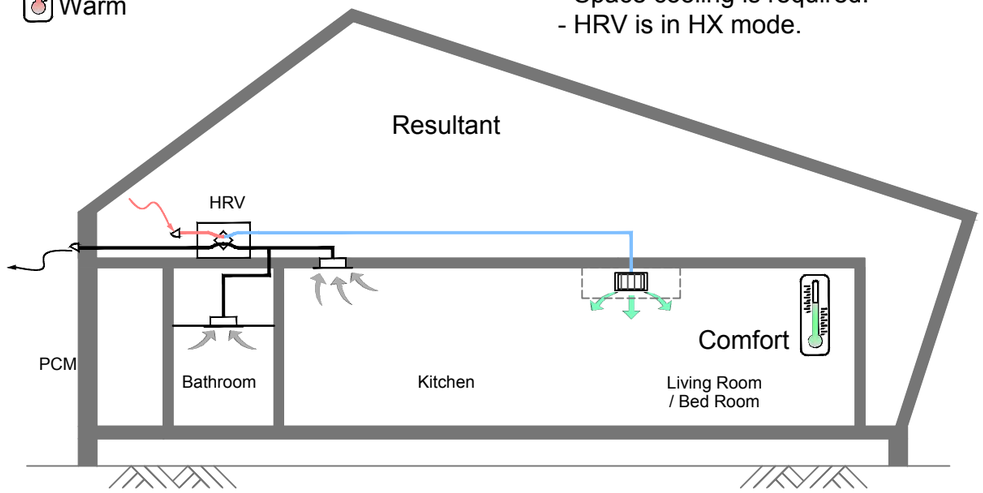

Winter - Night

Cold

- Outdoor temperature is much less than room temperature.
- HRV is in HX mode.
- Humidifier is operating.

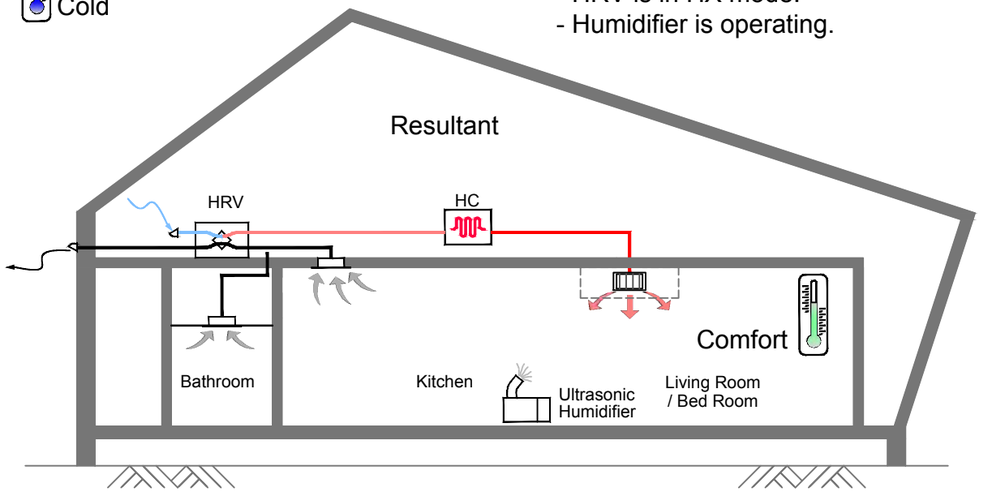

Spring - Night

Cool

- Outdoor temperature is less than room temperature.
- Space cooling is required.
- HRV is in bypass mode.

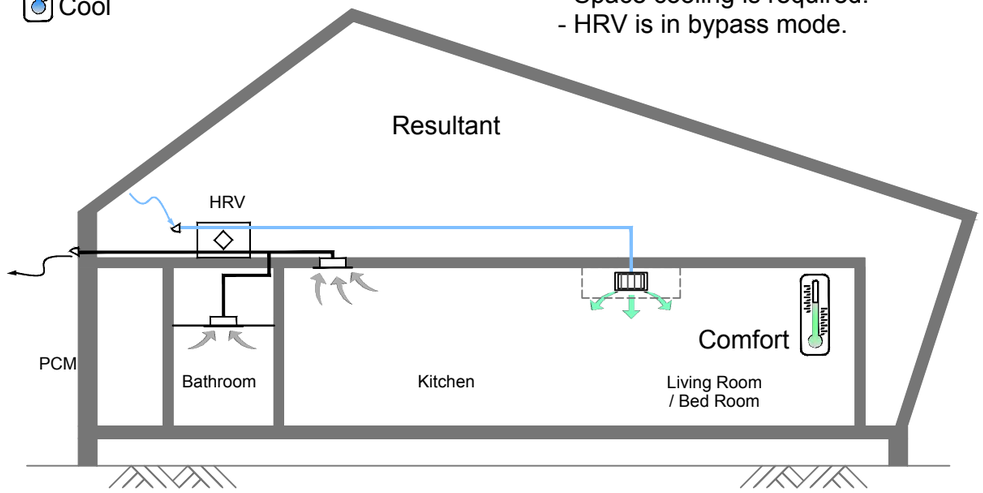

Legend:

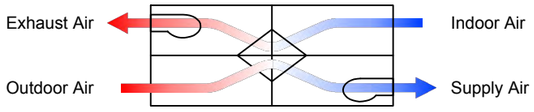

HRV - Heat Exchange Mode

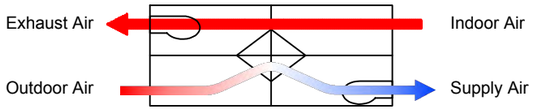

HRV - Bypass Mode

- Hot Air
- Warm Air
- Cool Air
- Cold Air
- Exhaust Air

Solar Decathlon Europe

Project: ORCHID HOUSE

Institution: 國立交通大學 National Chiao Tung University

NCTU Architecture 國立交通大學建築研究所

Team Name: NCTU/UNICODE

Address: 1001 Ta-Hsueh Road
Hsinchu City 30010
Taiwan

Contact: www.sde.tw

Consultants: uis United Integrated Services

Note:

Mark	Date	Description
DN	2013/04/01	SD Submission
DN	2013/07/01	DDc Submission
ST	2013/11/01	DD Submission
ST	2014/03/03	CD Submission
ST	2014/04/30	CD Submission
ST	2014/06/02	CD Submission

Drawn by: CHUNG

Checked by: CHUNG

Scale: -

Unit: -

DWG. Title: VENTILATION 2

DWG. No.: ME-042

PAGE: 189

1 Hot Water Storage Tank
2 Heat Pump
3 CO2 Heat Pump Package1
4 Expansion Tank 1
5 CO2 Heat Pump Package 2
6 Pump Station

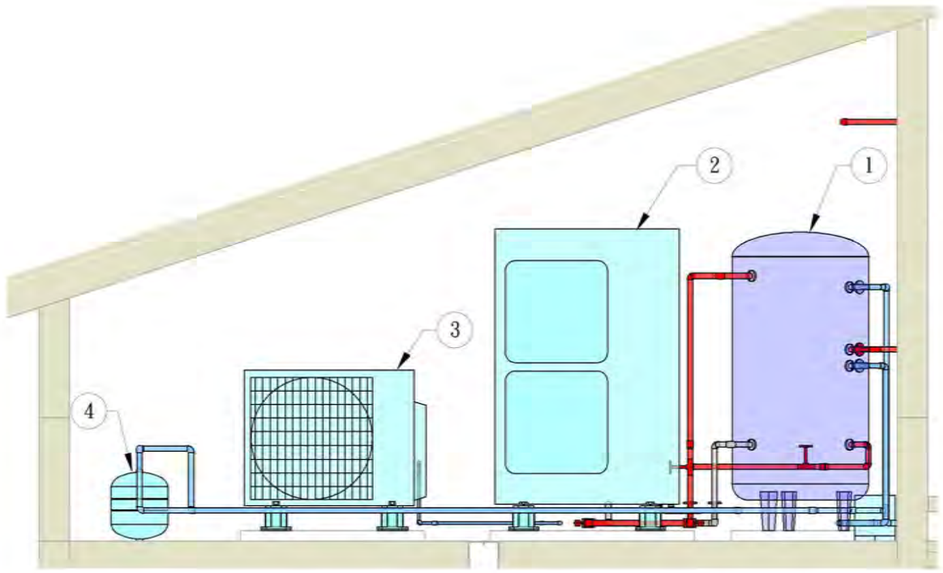

Mechanical Room Elevation(East)

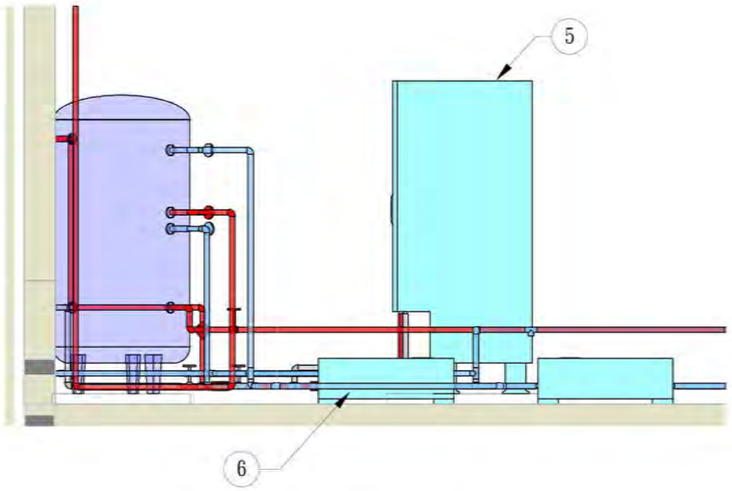

Mechanical Room Elevation(North)

Solar Decathlon Europe

Project: ORCHID HOUSE

Institution: 國立交通大學 National Chiao Tung University

NCTU Architecture 國立交通大學建築研究所

Team Name: NCTU/UNICODE
Address: 1001 Ta-Hsueh Road
Hsinchu City 30010
Taiwan
Contact: www.sde.tw

Consultants: uis United Integrated Services

Note:

Mark	Date	Description
DN	2013/04/01	SD Submission
DN	2013/07/01	DDc Submission
ST	2013/11/01	DD Submission
ST	2014/03/03	CD Submission
ST	2014/04/30	CD Submission
ST	2014/06/02	CD Submission

Drawn by: BB
Checked by: CHUNG
Scale: -
Unit: -

DWG. Title: MECHANICAL ROOM ELEVATIONS

DWG. No.: ME-101

PAGE: 190

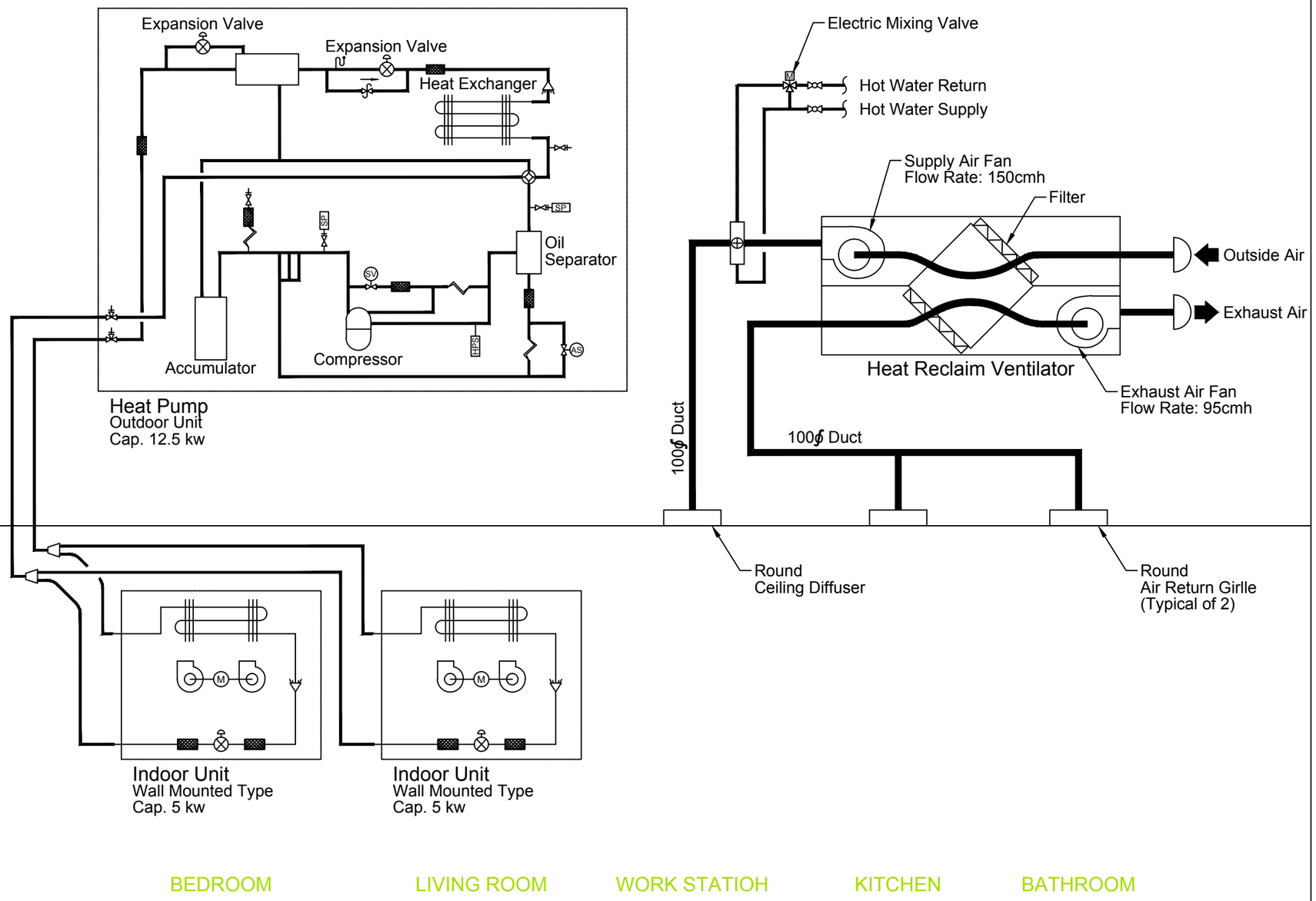

Solar Decathlon Europe

Project: ORCHID HOUSE

Institution: 國立交通大學 National Chiao Tung University

NCTU Architecture 國立交通大學建築研究所

Team Name: NCTU/UNICODE

Address: 1001 Ta-Hsueh Road
Hsinchu City 30010
Taiwan

Contact: www.sde.tw

Consultants: uis United Integrated Services

Note:

Mark	Date	Description
DN	2013/04/01	SD Submission
DN	2013/07/01	DDc Submission
ST	2013/11/01	DD Submission
ST	2014/03/03	CD Submission
ST	2014/04/30	CD Submission
ST	2014/06/02	CD Submission

Drawn by	LUI
Checked by	LUI
Scale	-
Unit	-

DWG. Title

HVAC SYSTEM
SCHEMATIC DRAWINGS

DWG. No. ME-201

PAGE 191

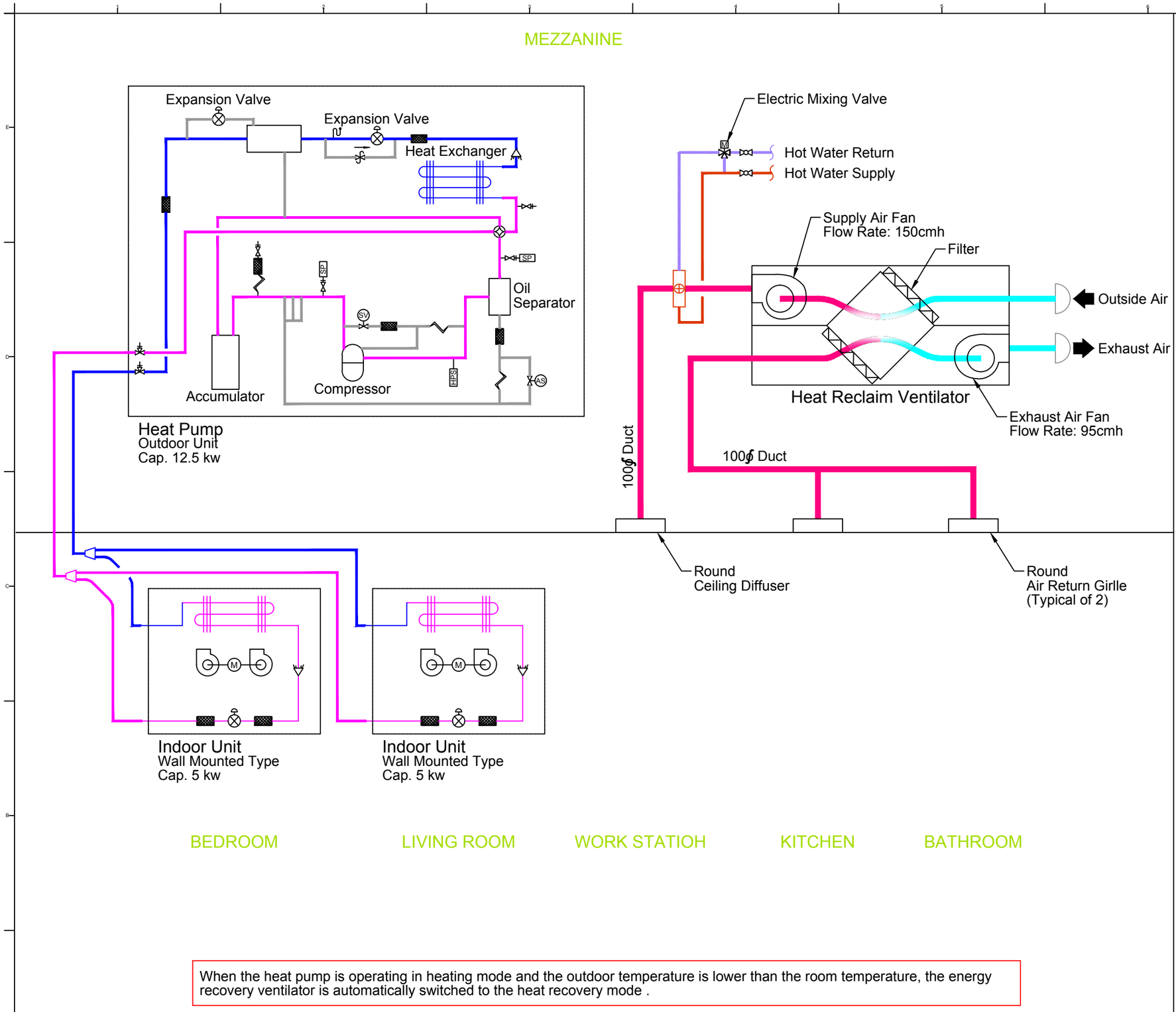

Gas Pipe
Liquid Pipe
Cold Air
Warm Air
Hot Water Supply
Hot Water Return

When the heat pump is operating in heating mode and the outdoor temperature is lower than the room temperature, the energy recovery ventilator is automatically switched to the heat recovery mode .

Solar Decathlon Europe

Project: ORCHID HOUSE

Institution: 國立交通大學 National Chiao Tung University

NCTU Architecture 國立交通大學建築研究所

Team Name: NCTU/UNICODE

Address: 1001 Ta-Hsueh Road Hsinchu City 30010 Taiwan

Contact: www.sde.tw

Consultants: uis United Integrated Services

Note:

Mark	Date	Description
DN	2013/04/01	SD Submission
DN	2013/07/01	DDc Submission
ST	2013/11/01	DD Submission
ST	2014/03/03	CD Submission
ST	2014/04/30	CD Submission
ST	2014/06/02	CD Submission

Drawn by: LUI

Checked by: LUI

Scale: -

Unit: -

DWG. Title: HEATING MODE SCHEMATIC DRAWINGS 1

DWG. No.: ME-211

PAGE: 192

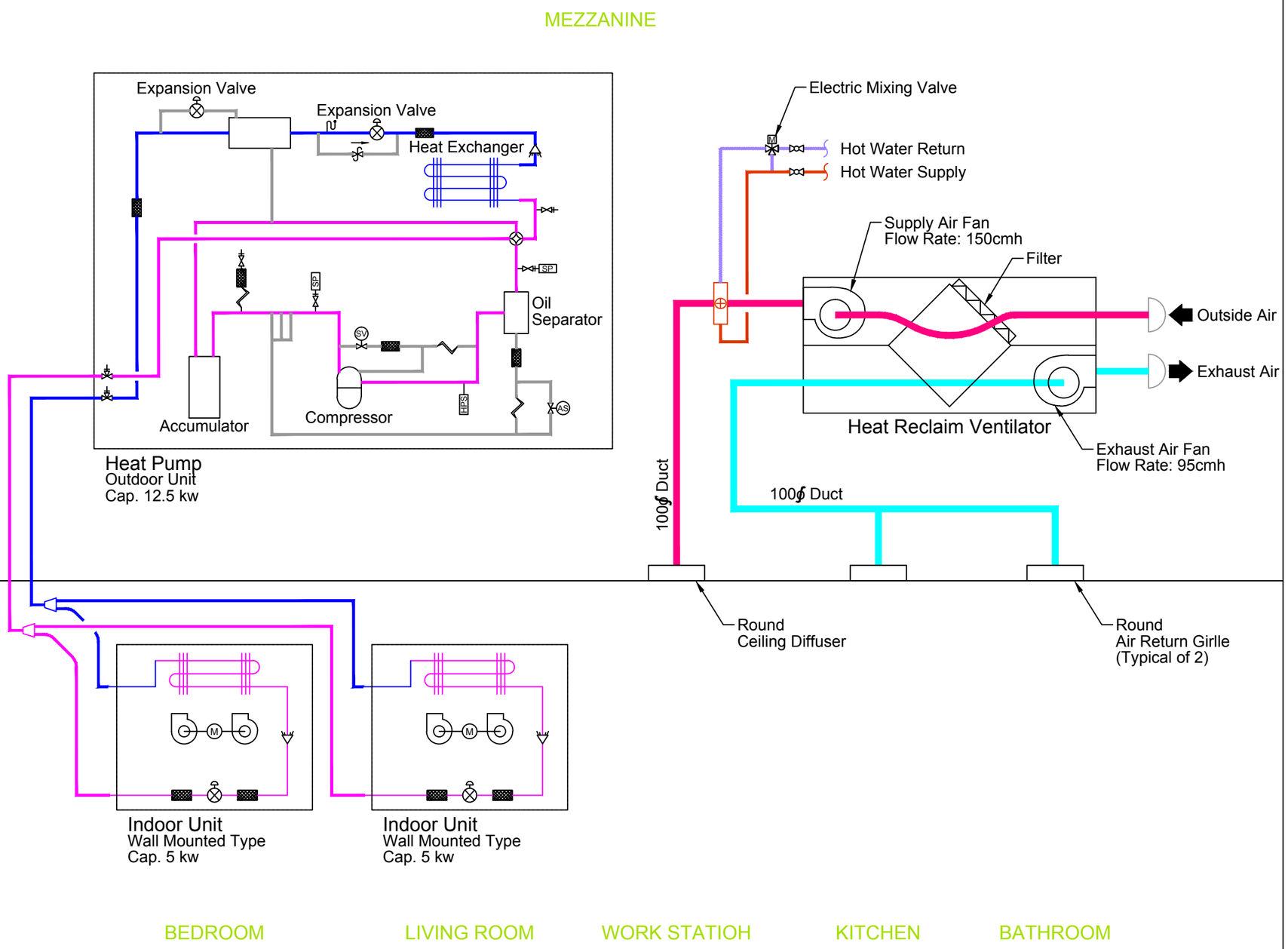

Gas Pipe
Liquid Pipe
Cold Air
Warm Air
Hot Water Supply
Hot Water Return

When the heat pump is operating in heating mode and the outdoor temperature is higher than the room temperature, the energy recovery ventilator is automatically switched to the bypass mode .

Solar Decathlon Europe

Project: ORCHID HOUSE

Institution: 國立交通大學 National Chiao Tung University

NCTU Architecture 國立交通大學建築研究所

Team Name: NCTU/UNICODE
Address: 1001 Ta-Hsueh Road Hsinchu City 30010 Taiwan
Contact: www.sde.tw

Consultants: uis United Integrated Services

Note:

Mark	Date	Description
DN	2013/04/01	SD Submission
DN	2013/07/01	DDc Submission
ST	2013/11/01	DD Submission
ST	2014/03/03	CD Submission
ST	2014/04/30	CD Submission
ST	2014/06/02	CD Submission

Drawn by: LUI
Checked by: LUI
Scale: -
Unit: -

DWG. Title: HEATING MODE SCHEMATIC DRAWINGS 2

DWG. No.: ME-212
PAGE: 193

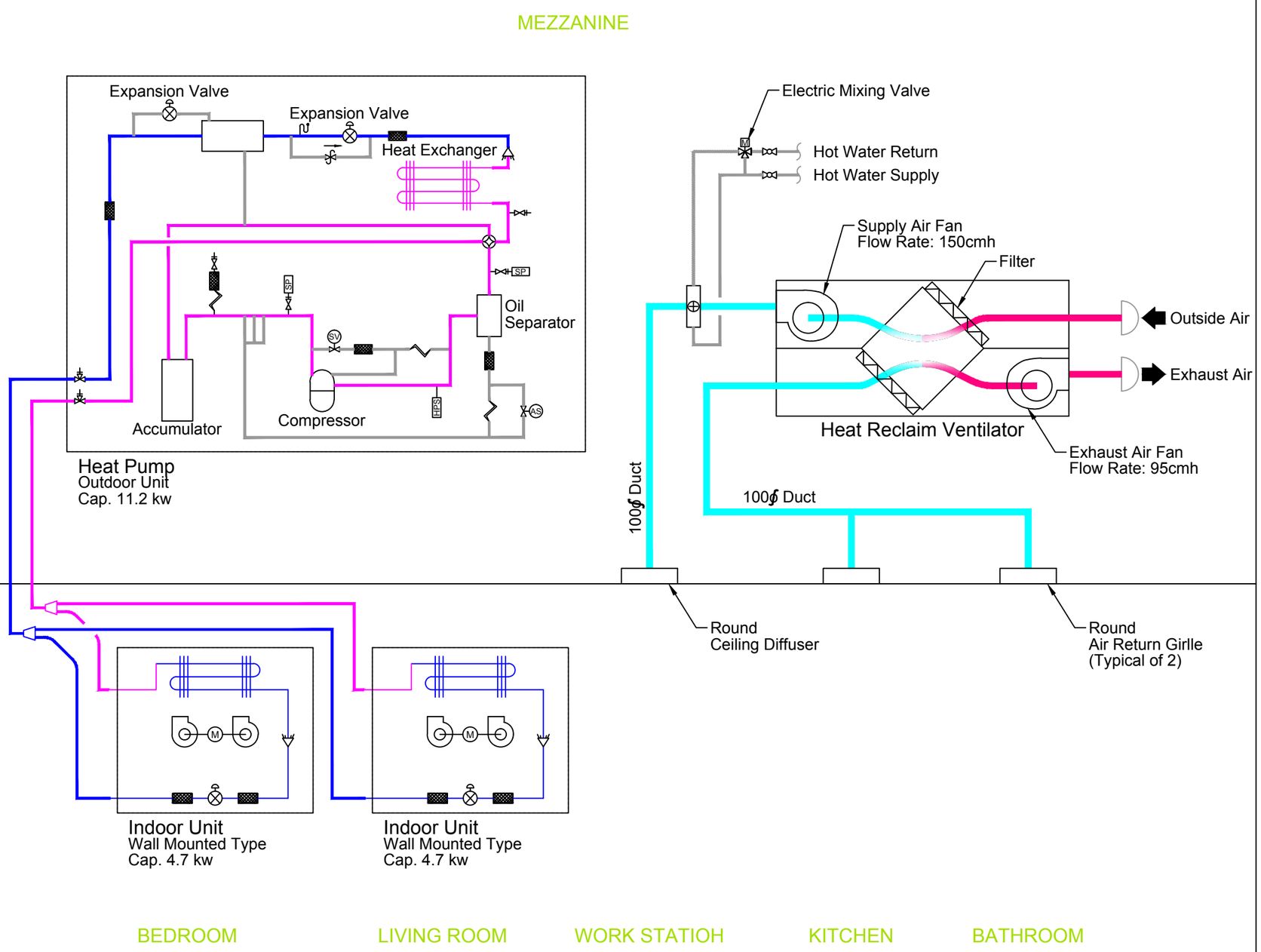

Gas Pipe

Liquid Pipe

When the heat pump is operating in cooling mode and the outdoor temperature is higher than the room temperature, the energy recovery ventilator is automatically switched to the heat recovery mode .

Solar Decathlon Europe

Project: ORCHID HOUSE

Institution: 國立交通大學 National Chiao Tung University

NCTU Architecture 國立交通大學建築研究所

Team Name: NCTU/UNICODE

Address: 1001 Ta-Hsueh Road Hsinchu City 30010 Taiwan

Contact: www.sde.tw

Consultants: uis United Integrated Services

Note:

Mark	Date	Description
DN	2013/04/01	SD Submission
DN	2013/07/01	DDc Submission
ST	2013/11/01	DD Submission
ST	2014/03/03	CD Submission
ST	2014/04/30	CD Submission
ST	2014/06/02	CD Submission

Drawn by: LUI

Checked by: LUI

Scale: -

Unit: -

DWG. Title: COOLING MODE SCHEMATIC DRAWINGS 1

DWG. No.: ME-221

PAGE: 194

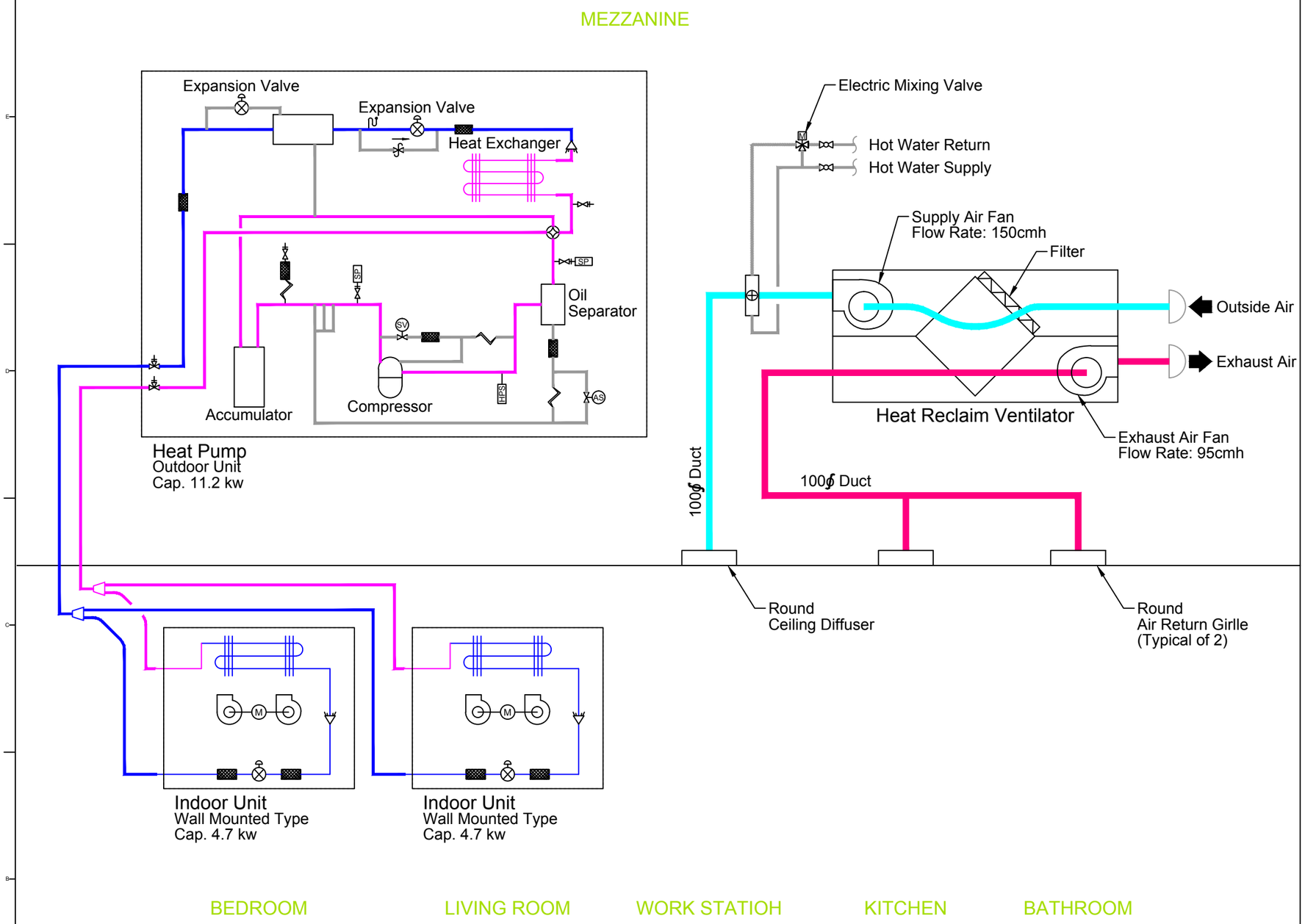

Gas Pipe

Liquid Pipe

When the heat pump is operating in cooling mode and the outdoor temperature is lower than the room temperature, the energy recovery ventilator is automatically switched to the bypass mode .

Solar Decathlon Europe

Project: ORCHID HOUSE

Institution: 國立交通大學 National Chiao Tung University

NCTU Architecture 國立交通大學建築研究所

Team Name: NCTU/UNICODE

Address: 1001 Ta-Hsueh Road Hsinchu City 30010 Taiwan

Contact: www.sde.tw

Consultants: uis United Integrated Services

Note:

Mark	Date	Description
DN	2013/04/01	SD Submission
DN	2013/07/01	DDc Submission
ST	2013/11/01	DD Submission
ST	2014/03/03	CD Submission
ST	2014/04/30	CD Submission
ST	2014/06/02	CD Submission

Drawn by: LUI

Checked by: LUI

Scale: -

Unit: -

DWG. Title: COOLING MODE SCHEMATIC DRAWINGS 2

DWG. No.: ME-222

PAGE: 195

Control Wiring Diagram

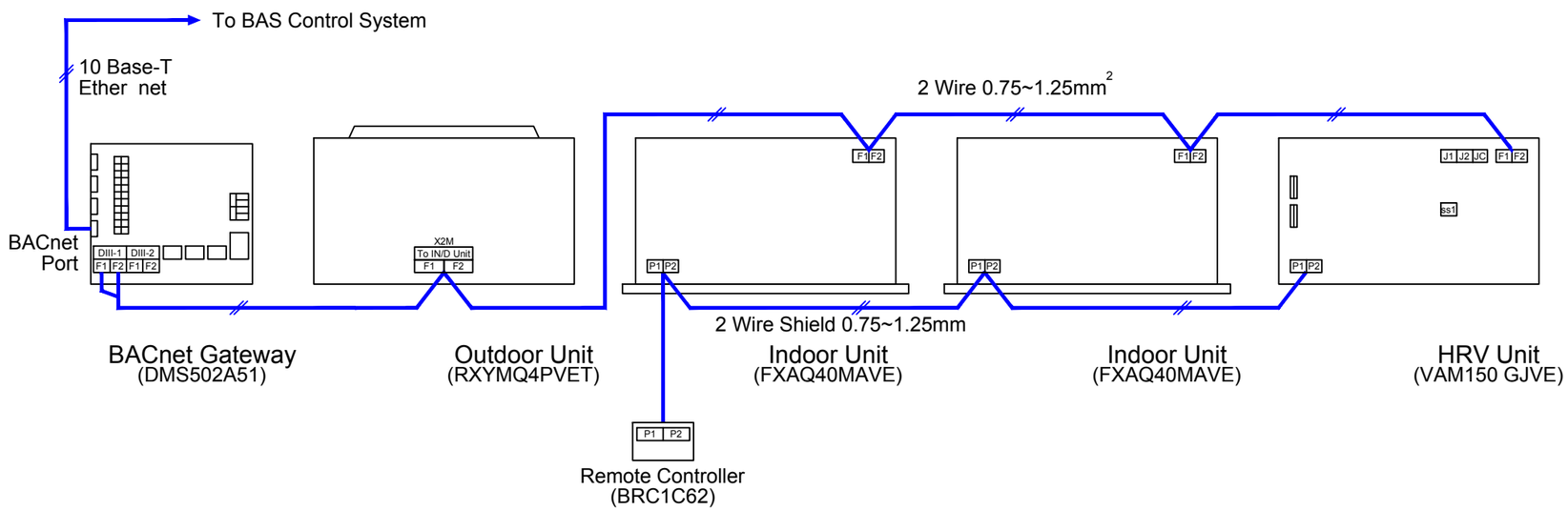

Remote Controller Function :

1. Cooling
2. Heating
3. Automatic Heating / Cooling Changeover
4. Program Dry Mode
5. Fan Mode
6. Program Timer
7. Program The Start/Stop Time

Operation Mode Of HRV Unit

1. In case of cooling operation

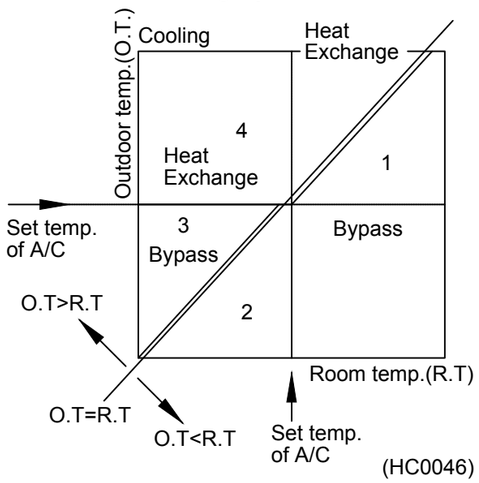

Zone 1 : Free cooling (cooling by outdoor air) in bypass mode.

Zone 2 : Room temperature to be achieved set temperature by heat exchange mode.

Zone 3 : Room temperature to be achieved set temperature in bypass mode.

Zone 4 : Fresh air supply is cooled down by indoor air in heat exchange mode (energy saving).
* The air cannot be supplied at the same temperature as the outdoor air because it is partly heat-exchanged.

2. In case of heating operation

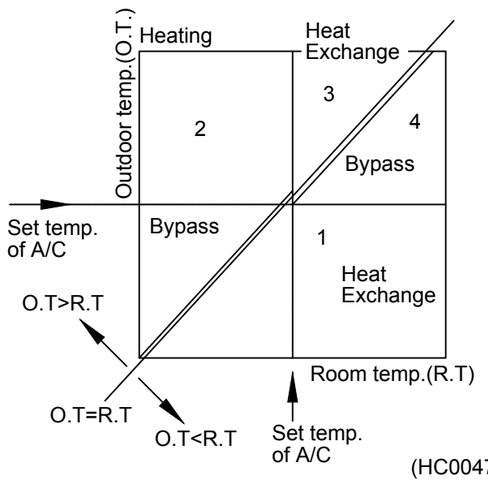

Zone 1 : Fresh air supply is heated up by indoor air in heat exchange mode (energy saving).

Zone 2 : Free heating (heating by outdoor air) in bypass mode.

Zone 3 : Room temperature to be achieved set temperature by heat exchange.

Zone 4 : Room temperature to be achieved set temperature in bypass mode.
* The air cannot be supplied at the same temperature as the outdoor air because it is partly heat-exchanged.

3. In case of fan operation only

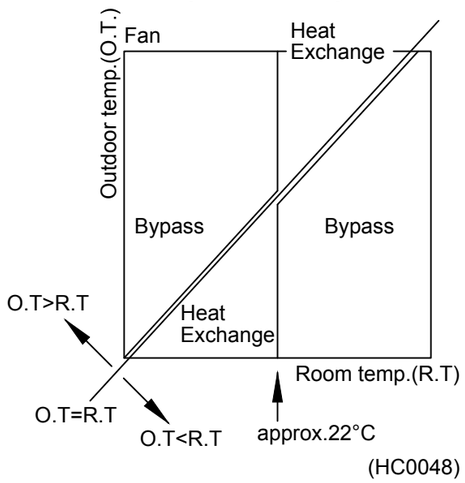

Ventilation mode is individually determined by the original formula of HRV with the temperature sensors.

Solar Decathlon Europe

Project: ORCHID HOUSE

Institution: 國立交通大學 National Chiao Tung University

NCTU Architecture 國立交通大學建築研究所

Team Name: NCTU/UNICODE
Address: 1001 Ta-Hsueh Road Hsinchu City 30010 Taiwan
Contact: www.sde.tw

Consultants: uis United Integrated Services

Note:

Mark	Date	Description
DN	2013/04/01	SD Submission
DN	2013/07/01	DDc Submission
ST	2013/11/01	DD Submission
ST	2014/03/03	CD Submission
ST	2014/04/30	CD Submission
ST	2014/06/02	CD Submission

Drawn by	LUI
Checked by	LUI
Scale	-
Unit	-

DWG. Title: CONTROLS 1

DWG. No. ME-231

PAGE 196

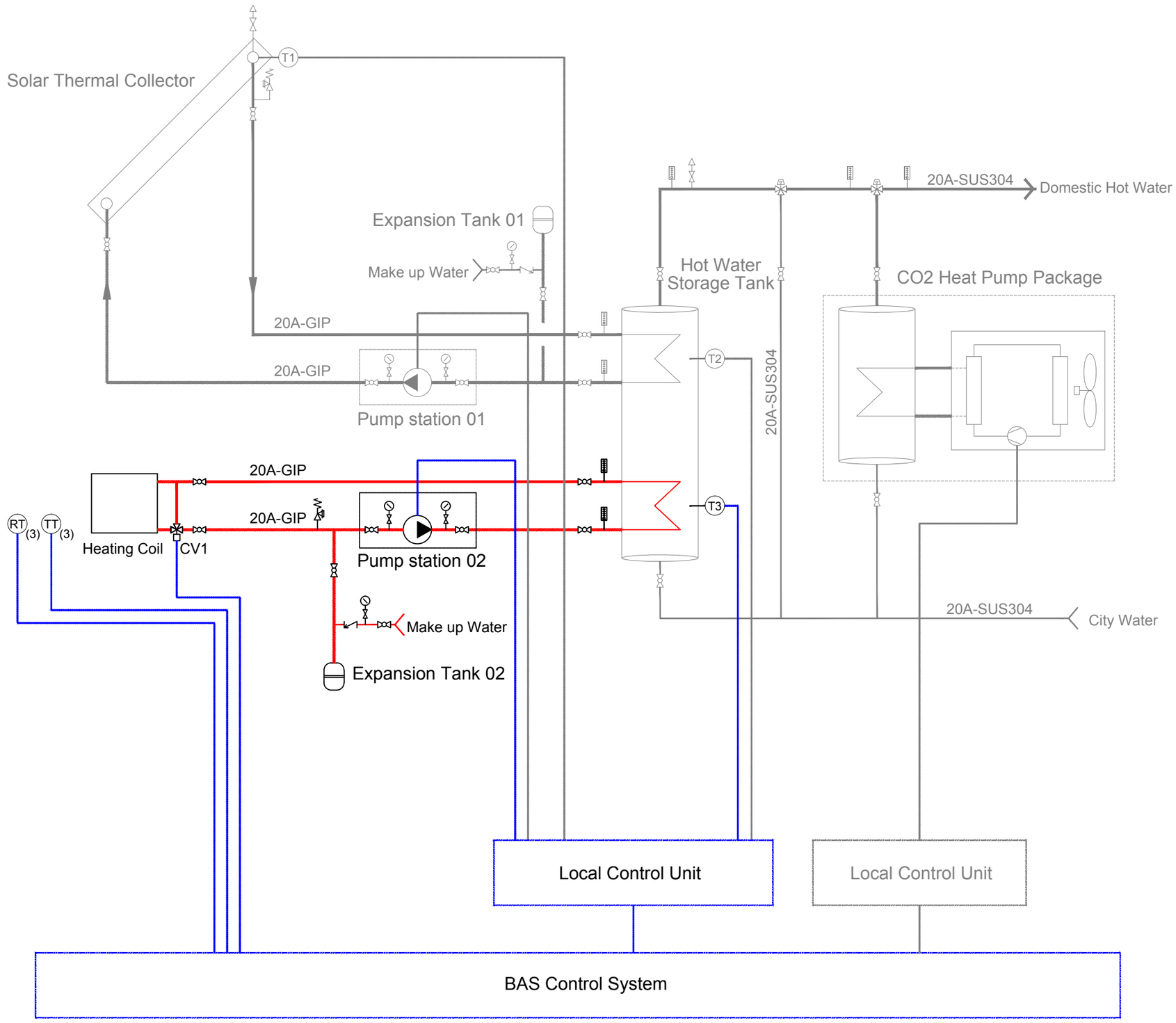

Remote Controller Function :

1. Cooling
2. Heating
3. Automatic Heating / Cooling Changeover
4. Program Dry Mode
5. Fan Mode
6. Program Timer
7. Program The Start/Stop Time

Solar Decathlon Europe

Project: ORCHID HOUSE

Institution: 國立交通大學 National Chiao Tung University

NCTU Architecture 國立交通大學建築研究所

Team Name: NCTU/UNICODE
Address: 1001 Ta-Hsueh Road Hsinchu City 30010 Taiwan
Contact: www.sde.tw

Consultants: uis United Integrated Services

Note:

Mark	Date	Description
DN	2013/04/01	SD Submission
DN	2013/07/01	DDc Submission
ST	2013/11/01	DD Submission
ST	2014/03/03	CD Submission
ST	2014/04/30	CD Submission
ST	2014/06/02	CD Submission

Drawn by	LUI
Checked by	LUI
Scale	-
Unit	-

DWG. Title: CONTROLS 2

DWG. No. ME-232

PAGE 197

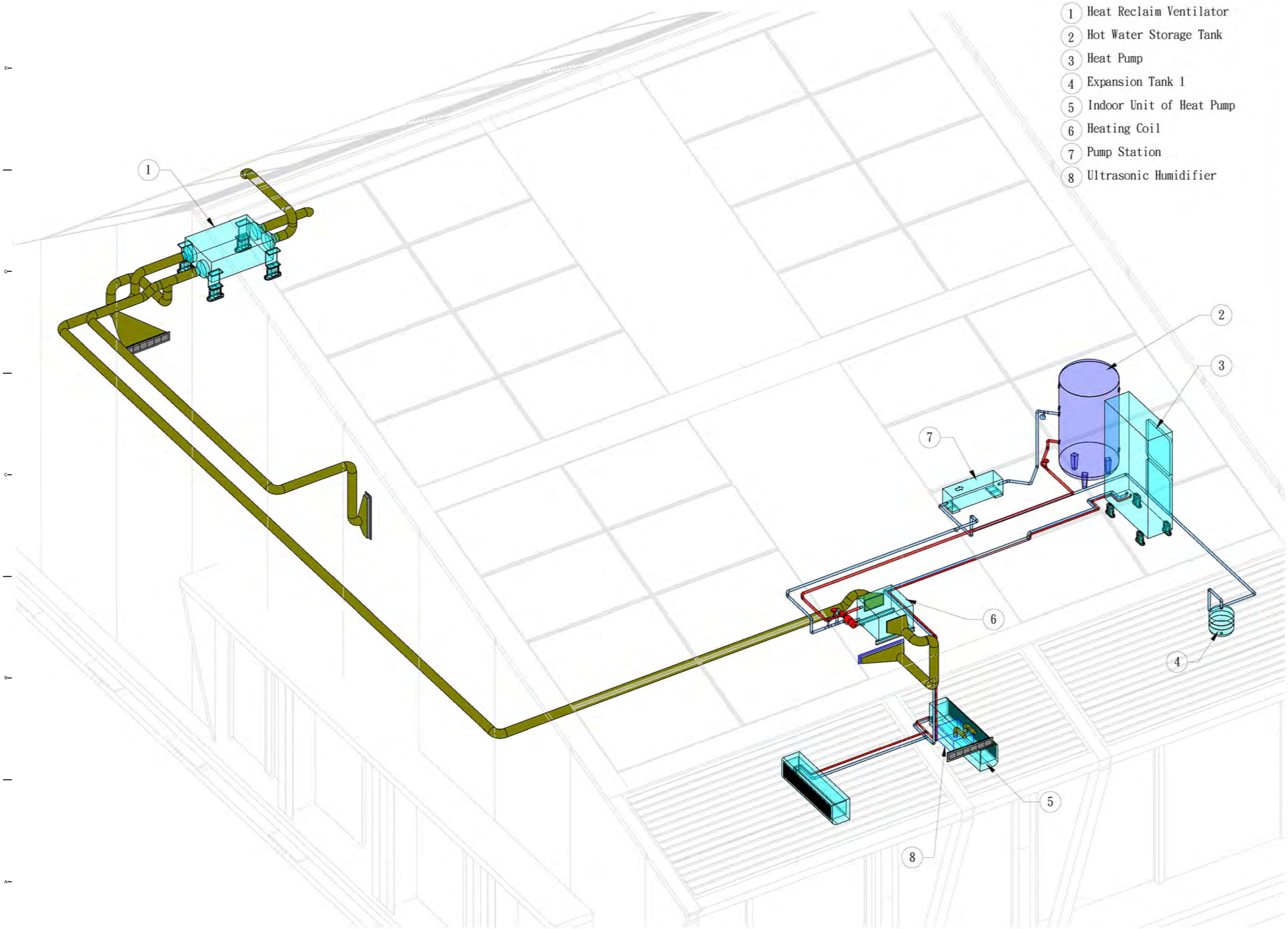

1. Heat Reclaim Ventilator
2. Hot Water Storage Tank
3. Heat Pump
4. Expansion Tank 1
5. Indoor Unit of Heat Pump
6. Heating Coil
7. Pump Station
8. Ultrasonic Humidifier

Solar Decathlon Europe

Project: ORCHID HOUSE

Institution: 國立交通大學 National Chiao Tung University

NCTU Architecture 國立交通大學建築研究所

Team Name: NCTU/UNICODE

Address: 1001 Ta-Hsueh Road
Hsinchu City 30010
Taiwan

Contact: www.sde.tw

Consultants: uis United Integrated Services

Note:

Mark	Date	Description
DN	2013/04/01	SD Submission
DN	2013/07/01	DDc Submission
ST	2013/11/01	DD Submission
ST	2014/03/03	CD Submission
ST	2014/04/30	CD Submission
ST	2014/06/02	CD Submission

Drawn by: BB

Checked by: CHUNG

Scale: -

Unit: -

DWG. Title: ISOMETRIC DISTRIBUTION 1

DWG. No.: ME-301

PAGE: 198

1 Hot Water Storage Tank
2 Heat Pump
3 CO2 Heat Pump Packagel
4 Expansion Tank 1
5 Expansion Tank 2
6 CO2 Heat Pump Package 2
7 Pump Station

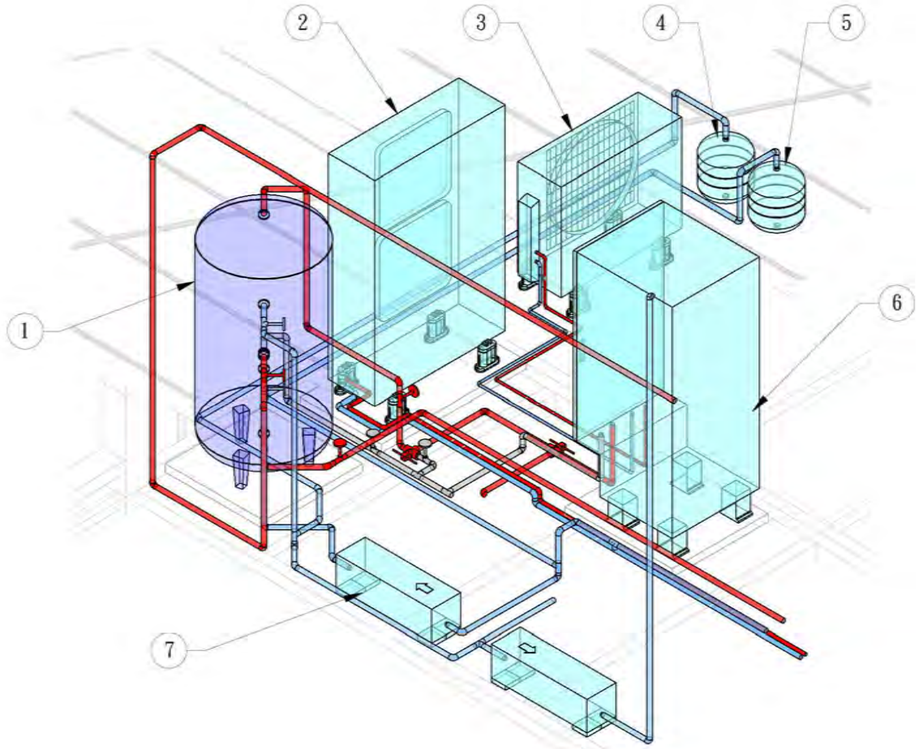

Mechanical Room Elevation(East North)

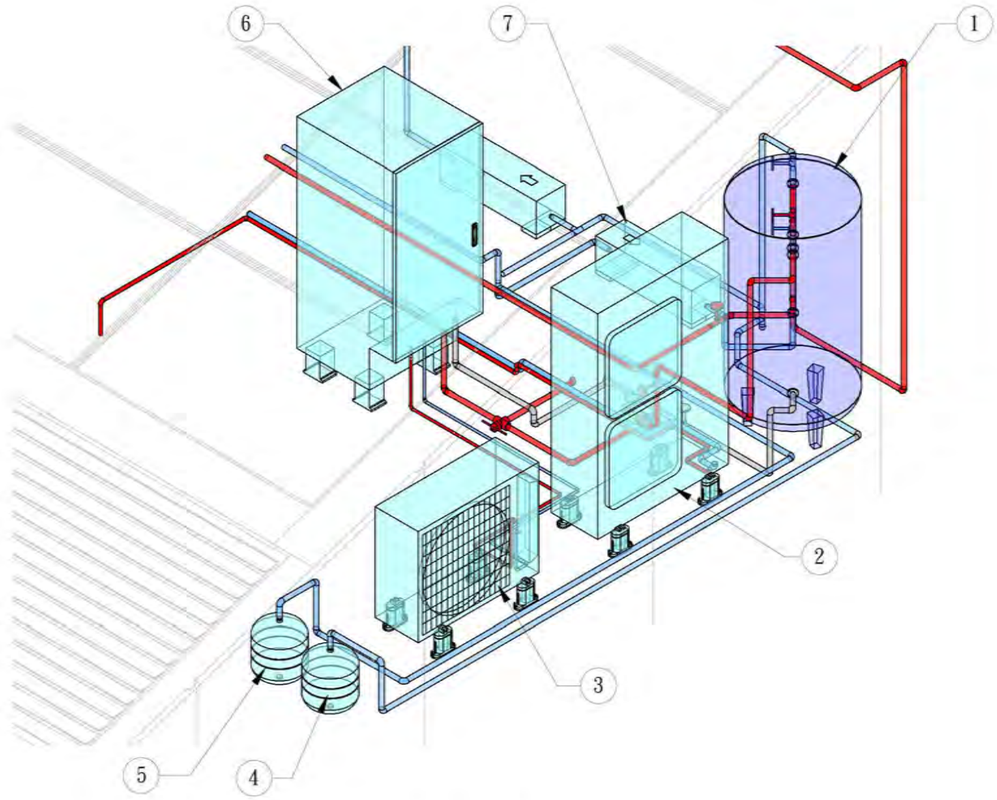

Mechanical Room Elevation(West South)

Solar Decathlon Europe

Project: ORCHID HOUSE

Institution: 國立交通大學 National Chiao Tung University

NCTU Architecture 國立交通大學建築研究所

Team Name: NCTU/UNICODE
Address: 1001 Ta-Hsueh Road Hsinchu City 30010 Taiwan
Contact: www.sde.tw

Consultants: uis United Integrated Services

Note:

Mark	Date	Description
DN	2013/04/01	SD Submission
DN	2013/07/01	DDc Submission
ST	2013/11/01	DD Submission
ST	2014/03/03	CD Submission
ST	2014/04/30	CD Submission
ST	2014/06/02	CD Submission

Drawn by: BB
Checked by: CHUNG
Scale: -
Unit: -

DWG. Title: ISOMETRIC DISTRIBUTION 2

DWG. No.: ME-302

PAGE: 199

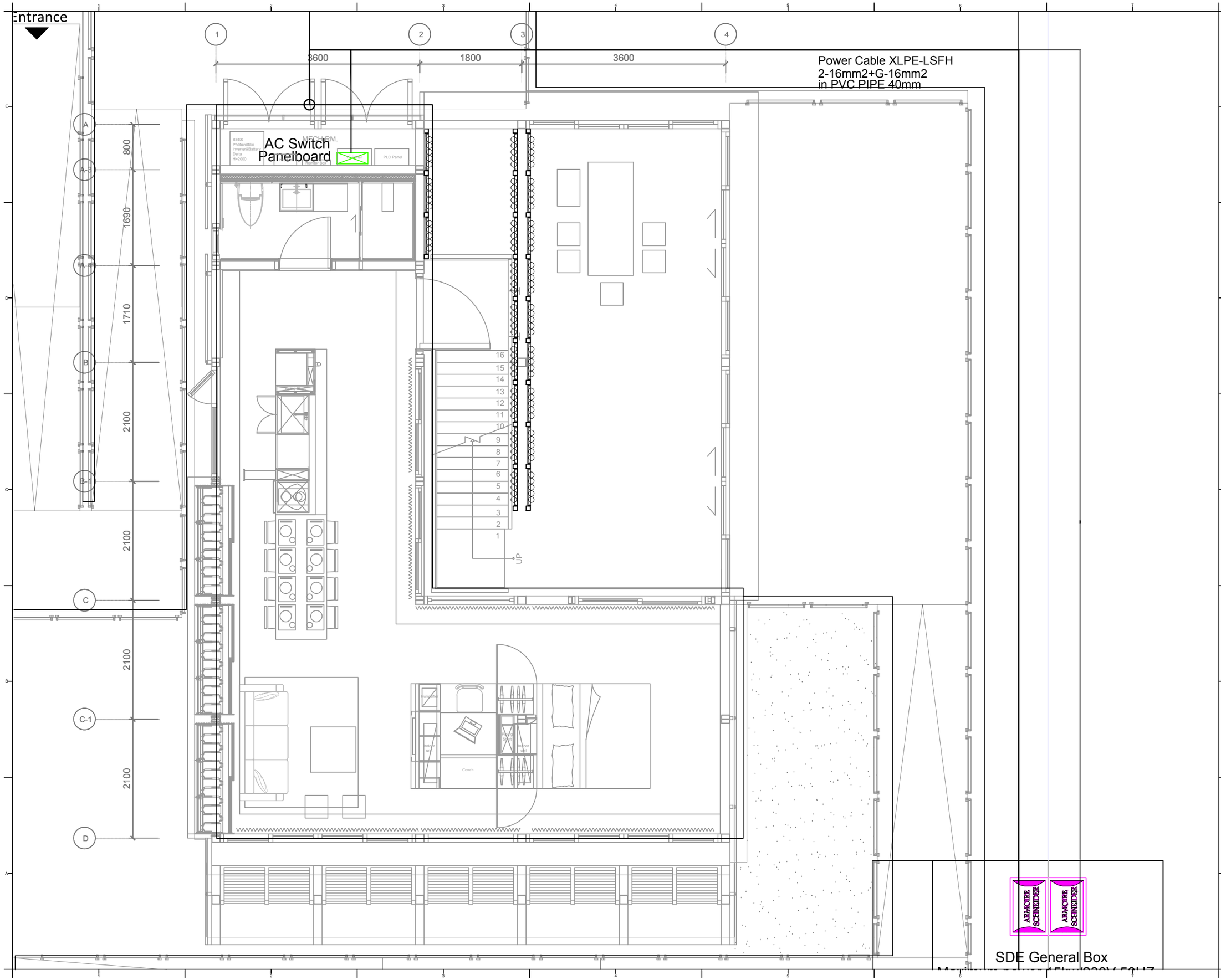

Solar Decathlon Europe

Project: ORCHID HOUSE

Institution: 國立交通大學 National Chiao Tung University

NCTU Architecture 國立交通大學建築研究所

Team Name: NCTU/UNICODE

Address: 1001 Ta-Hsueh Road
Hsinchu City 30010
Taiwan

Contact: www.sde.tw

Consultants: uis United Integrated Services

Note:

Mark	Date	Description
DN	2013/04/01	SD Submission
DN	2013/07/01	DDc Submission
ST	2013/11/01	DD Submission
ST	2014/03/03	CD Submission
ST	2014/04/30	CD Submission
ST	2014/06/02	CD Submission

Drawn by	RAYS
Checked by	RAYS
Scale	1:60
Unit	mm

DWG. Title: GRID INTERCONNECTION

DWG. No.: EL-001

PAGE: 200

Tag	Components	Manufacturer	Model	Q'ty	Notes
①	PV Module	NSP	D6P250B3A	20	
②	Box			1	
	Fuse			4	DC1000V 15A
	Surge Protection Device	ABB	OVR PV 40-600 P	2	Uc:670V,Up:1.4kV,In:20kA(8/20us)
	Disconnector Switch	MERZ	MDC1A-025-600	2	DC600V 25A
③	Inverter	Delta	Solivia 5.0	1	

Photovoltaic Module :
NSP D6P250B3A
Max. DC power = 250Wp
Voc = 37.33 V
Vmp = 30.34 V
Isc = 8.69 A
Temp. Coeff. of Voc = -0.117 V/˚C
Temp. Coeff. of Isc = 0.004 A/°C
Temp. Coeff. of Vmp = -0.127 V/°C
Module Efficiency = 15.3 %

Inverter :
Delta Solivia 5.0
Max. input power = 6,000Wp
Input Voltage range = 125 ~ 600V
Full power MPP range = 150 ~ 480V
Max. current = 36.6A
DC connector = 2 pairs
Nominal apparent power = 5,000VA
Voltage range = 184~264Vac
AC output frequency = 50 Hz
Max. current = 27.2 Aac
Max. efficiency = 96.1%
EU efficiency = 94.6%

Voltage Calculations :
Voc @ coldest expected operating Temp.:
Low ambient Temp. = -20˚C
Voc(-20°C)=Voc(STC)+(-20°C-25°C)*(ΔVoc/°C)=37.33-45*(-0.117) = 42.595V
Max. modules of string:
nmax=Vdc(input max)/Voc(-20°C)=600/42.595=14.086 choose 14pcs
Vmp @ highest expected operating Temp.:
High ambient Temp. = 75˚C
Vmp(75°C)=Vmp(STC)+(75°C-25°C)*(ΔVmp/°C)=30.34+50*(-0.127) = 23.99V
Min. modules of string:
nmin=Vmp(min)/Vmp(75°C)=150/23.99=6.25 choose 7pcs
Selection modules of string = 10 pcs

Voc(-20°C)_string = Modules*Voc(-20°C) = 10*42.595V = 425.95V < 600V

Vmp(75°C)_string = Modules*(75°C) = 10*23.99V = 239.9V > 150V

String in parallel :
Max. DC power of Charge Controller / Selection modules of string / Module Max. DC power
= 5,000W / 10pcs / 250W
= 2.0 ≤ 2parallel

DC array conductor :
1.56 * Isc * 2 = 1.56 * 8.69A * 2 = 27.11A
Selected conductor : solar cable 4mm²

Labels for pv installations:

ON DC SIDE

All the junction boxes and DC electrical cabling must indicate live conductors or the internal parts of the boxes can remain live even after the opening of the DC switch.

On the front of all junction boxes, insert a label:
"Attention, cables courant continu sous tension"

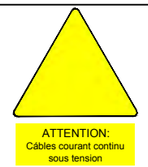

In all the junction boxes and in all the DC disconnect boxes, insert a label:
"Ne pas manceuvrer en charge"

ON THE INVERTERS

All the inverters shall have clear markings specifying that before all work, all the voltage sources must be electrically isolated.

Insert this label on the inverter front.

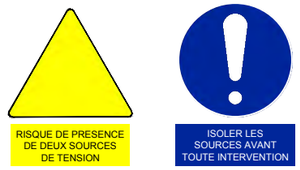

SPD selection of Calculations :
Buildings in cities so use TYPE 2-class II
choose In:20kA(8/20us)
Max continuous operating voltage Uc:
426V*1.1=468.6V choose 670Vdc
insulation voltage of the equipment:1.2~2kV
choose Up:1.4kV

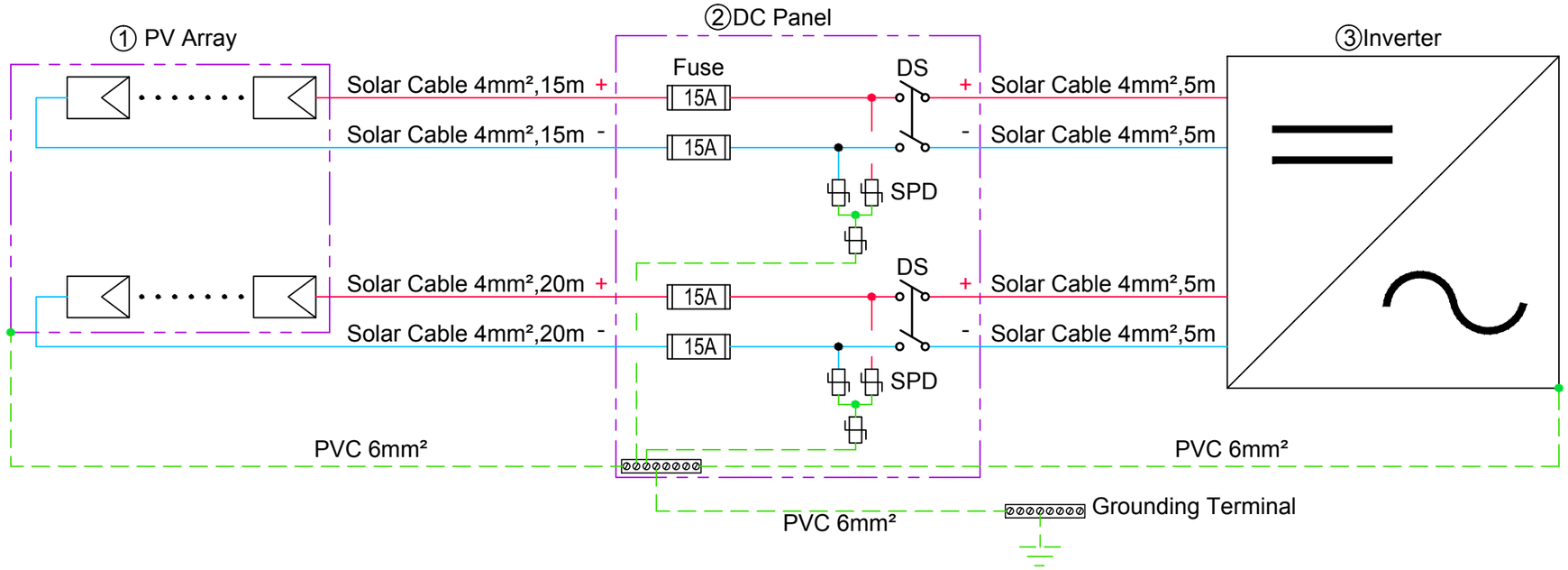

Solar Decathlon Europe

Project: ORCHID HOUSE

Institution: 國立交通大學 National Chiao Tung University

NCTU Architecture 國立交通大學建築研究所

Team Name: NCTU/UNICODE
Address: 1001 Ta-Hsueh Road Hsinchu City 30010 Taiwan
Contact: www.sde.tw

Consultants: DELTA 台達電子工業股份有限公司 DELTA ELECTRONICS, INC.

Note:

Mark	Date	Description
DN	2013/04/01	SD Submission
DN	2013/07/01	DDc Submission
ST	2013/11/01	DD Submission
ST	2014/03/03	CD Submission
ST	2014/04/30	CD Submission
ST	2014/06/02	CD Submission

Drawn by: GK
Checked by: DN
Scale: -
Unit: -

DWG. Title: DC WIRING DIAGRAM

DWG. No.: EL-201
PAGE: 201

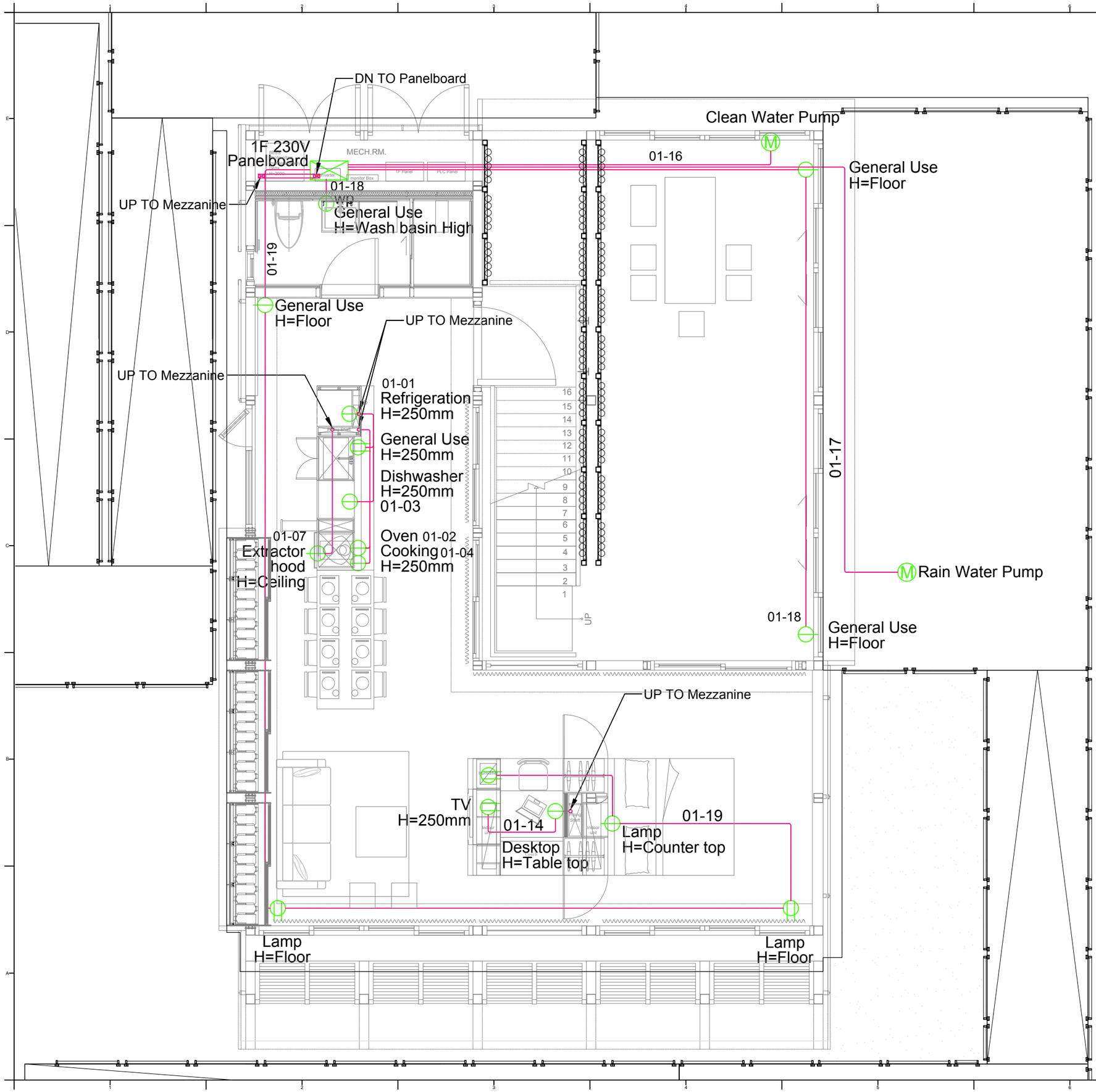

Symbol & Legend

- Single Socket outlet with child protection, 16A 2P+E, 250V
- Duplex Socket outlet with child protection, 16A 2P+E, 250V
- Single Socket outlet with water-proof cover, IP54, 16A 2P+E, 250V
- Pump or Motor 2P+E, 230V
- 230V Electrical Panelboard
- Branch Circuit (concealed in Ceiling or Wall)
- Branch Circuit (Exposed on Wall)
- WIREWAY 100mmW x 50mmH

LOOP NUMBER

01-03 — CIRCUIT NUMBER
└ PANEL NUMBER

PANEL NUMBER

01-- 1F 230V Panelboard
02-- 2F 230V Panelboard

Solar Decathlon Europe

Project: ORCHID HOUSE

Institution: 國立交通大學 National Chiao Tung University

NCTU Architecture 國立交通大學建築研究所

Team Name: NCTU/UNICODE

Address: 1001 Ta-Hsueh Road Hsinchu City 30010 Taiwan

Contact: www.sde.tw

Consultants: UIS United Integrated Services

Note:

Mark	Date	Description
DN	2013/04/01	SD Submission
DN	2013/07/01	DDc Submission
ST	2013/11/01	DD Submission
ST	2014/03/03	CD Submission
ST	2014/04/30	CD Submission
ST	2014/06/02	CD Submission

Drawn by: RAYS

Checked by: -

Scale: 1:60

Unit: mm

DWG. Title: POWER PLAN GROUND LEVEL

DWG. No.: EL-301

PAGE: 202

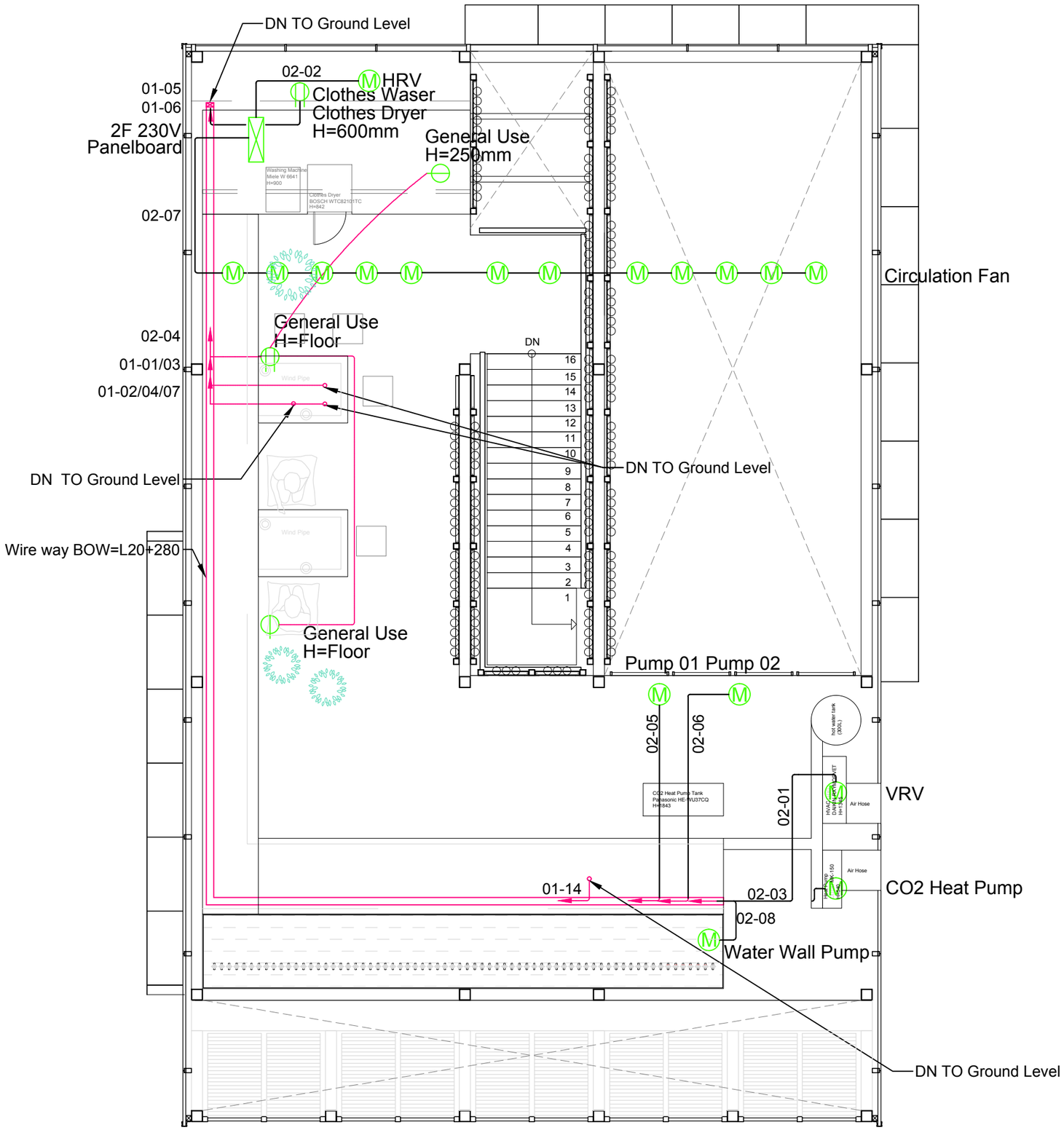

Symbol & Legend

- Single Socket outlet with child protection, 16A 2P+E, 250V
- Duplex Socket outlet with child protection, 16A 2P+E, 250V
- Single Socket outlet with water-proof cover, IP54, 16A 2P+E, 250V
- Pump or Motor 2P+E, 230V
- 230V Electrical Panelboard
- Branch Circuit (concealed in Ceiling or Wall)
- Branch Circuit (Exposed on Wall)
- WIREWAY 100mmW x 58mmH

LOOP NUMBER

01-03 — CIRCUIT NUMBER
└ PANEL NUMBER

PANEL NUMBER

01-- 1F 230V Panelboard
02-- 2F 230V Panelboard

Solar Decathlon Europe

Project: ORCHID HOUSE

Institution: 國立交通大學 National Chiao Tung University

NCTU Architecture 國立交通大學建築研究所

Team Name:	NCTU/UNICODE
Address:	1001 Ta-Hsueh Road Hsinchu City 30010 Taiwan
Contact:	www.sde.tw

Consultants: United Integrated Services

Note:

Mark	Date	Description
DN	2013/04/01	SD Submission
DN	2013/07/01	DDc Submission
ST	2013/11/01	DD Submission
ST	2014/03/03	CD Submission
ST	2014/04/30	CD Submission
ST	2014/06/02	CD Submission

Drawn by	RAYS
Checked by	-
Scale	1:60
Unit	mm

DWG. Title: POWER PLAN MEZZANINE LEVEL

DWG. No. EL-302

PAGE 203

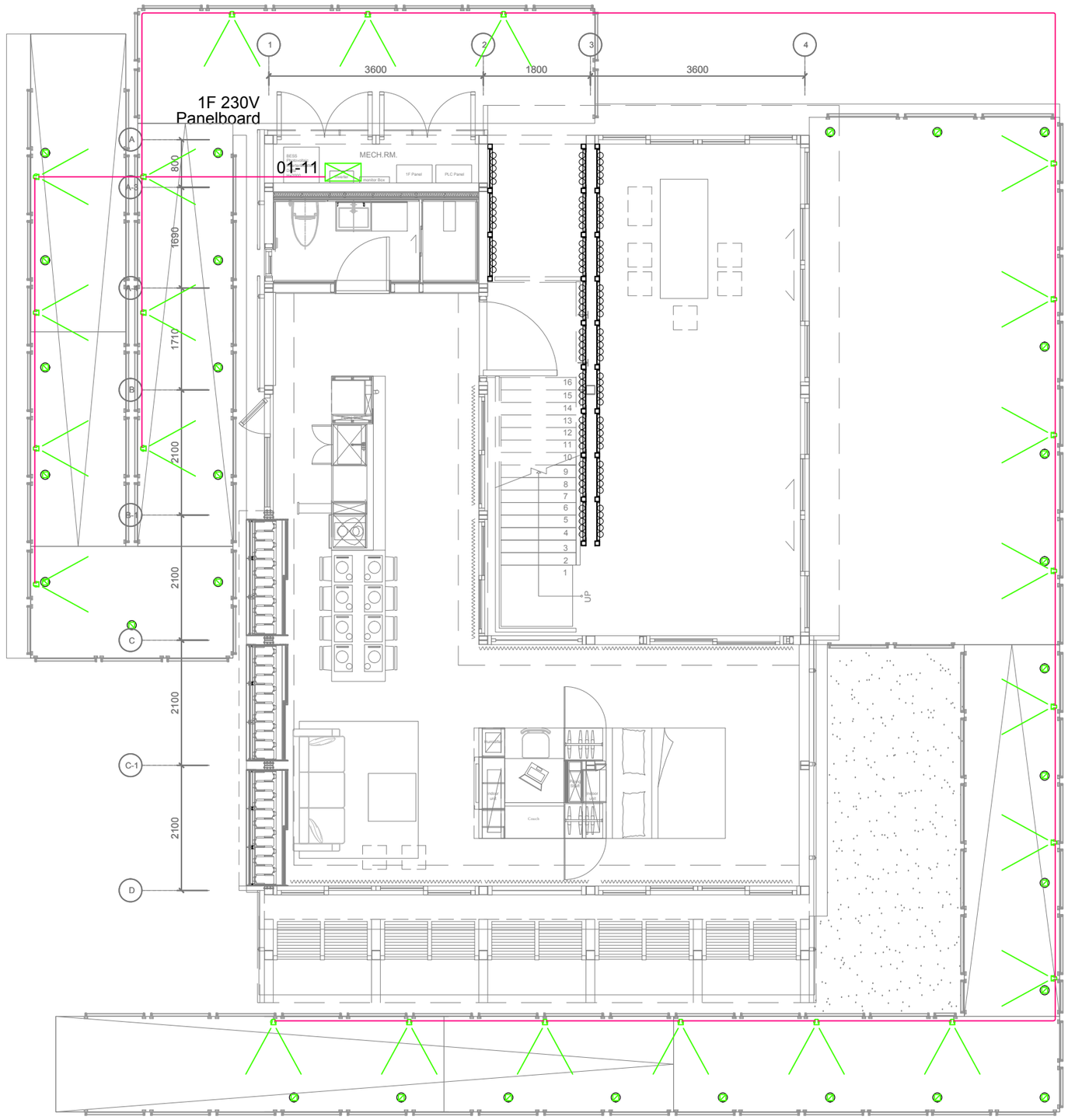

SYMBOL & LEGEND

Taiwan Solar, Solar Underground Light
Ni-MH battery 3.6V, 0.3W

Floor LED lamp

230V Electrical Panelboard

Branch Circuit (concealed in Ceiling or Wall)

Branch Circuit (Exposed on Wall)

LOOP NUMBER

01-03 —— CIRCUIT NUMBER
└———— PANEL NUMBER

PANEL NUMBER

01-- 1F 230V Panelboard

02-- 2F 230V Panelboard

0 1 2 5 METER

Solar Decathlon Europe

Project: ORCHID HOUSE

Institution: 國立交通大學 National Chiao Tung University

NCTU Architecture 國立交通大學建築研究所

Team Name: NCTU/UNICODE
Address: 1001 Ta-Hsueh Road Hsinchu City 30010 Taiwan
Contact: www.sde.tw

Consultants: uis United Integrated Services

Note:

Mark	Date	Description
DN	2013/04/01	SD Submission
DN	2013/07/01	DDc Submission
ST	2013/11/01	DD Submission
ST	2014/03/03	CD Submission
ST	2014/04/30	CD Submission
ST	2014/06/02	CD Submission

Drawn by	DL
Checked by	-
Scale	1:80
Unit	mm

DWG. Title: LIGHTING PLAN SITE

DWG. No. EL-401

PAGE 204

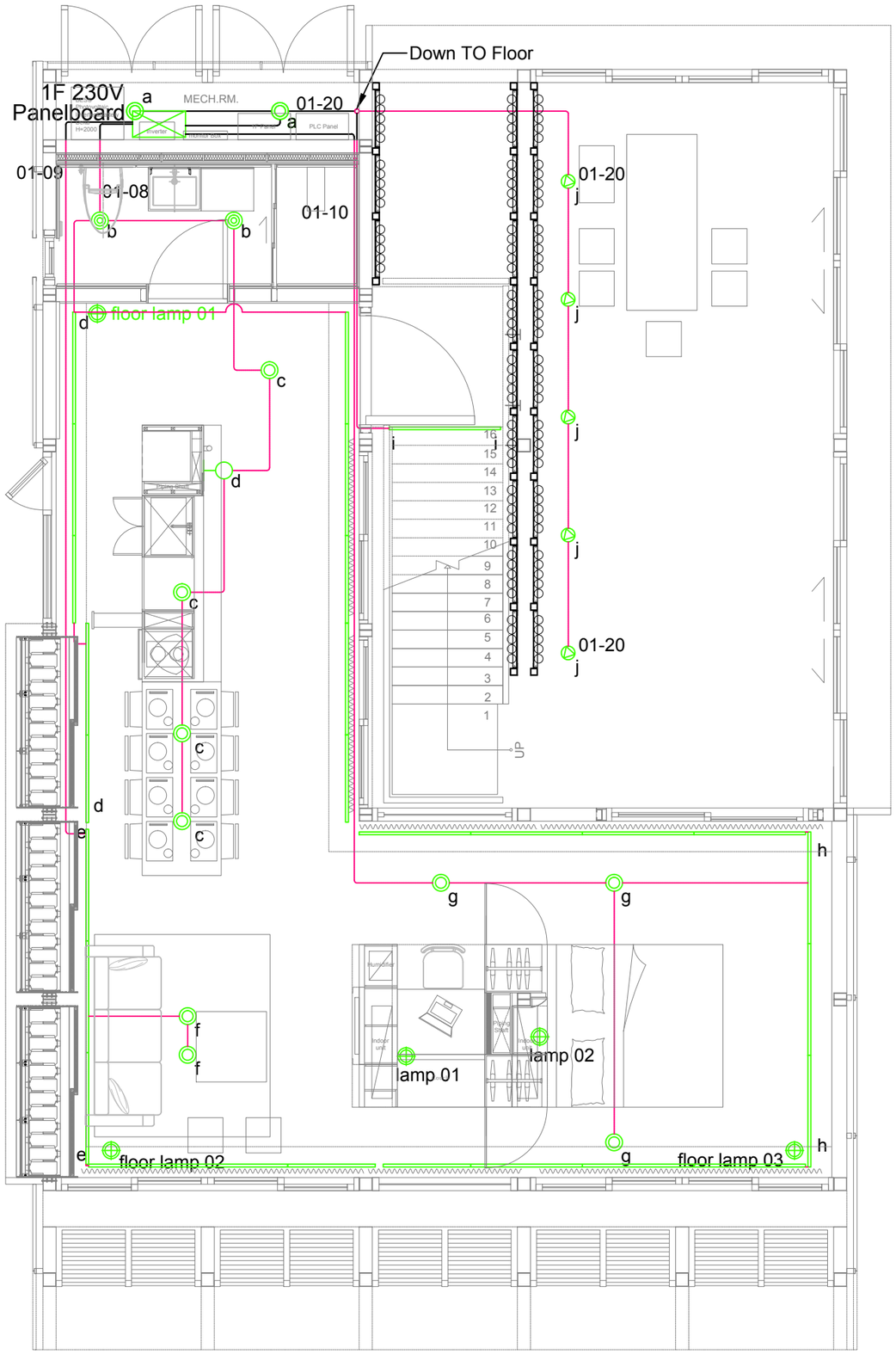

SYMBOL & LEGEND

- Tons LSP-3106 / 7.2W / Warm White AC 100~240V, Wall mounted / 4000k
- Tons T8 LED / 1270mm 20W/4000k AC 100~240V, Wall mounted
- Tons T8 LED /995mm 20W/4000k AC 100~240V, Wall mounted
- Tons KA-112R / 3.6W Warm White AC 100~240V, Wall mounted / 4000k
- Tons DA-504AD / 1.2W / Warm White AC 100~240V, Recess mounted / 4000k
- Tons DG-913C / 12.6W / Warm White AC 100~240V, Recess mounted / 4000k
- Tons ODL-005 / 1.2W / Warm White AC 100~240V, Recess mounted / 4000k
- Delta A60 / DF 10W AC 100~240V / E27 / 4000k
- Sa — Lighting Switch, single-cut
- S3a — Lighting Switch, double-cut
- 230V Electrical Panelboard
- Branch Circuit (concealed in Ceiling or Wall)
- Branch Circuit (Exposed on Wall)

LOOP NUMBER

01-03 — CIRCUIT NUMBER
└ PANEL NUMBER

PANEL NUMBER

01-- 1F 230V Panelboard
02-- 2F 230V Panelboard

Solar Decathlon Europe

Project: ORCHID HOUSE

Institution: 國立交通大學 National Chiao Tung University

NCTU Architecture 國立交通大學建築研究所

Team Name: NCTU/UNICODE

Address: 1001 Ta-Hsueh Road Hsinchu City 30010 Taiwan

Contact: www.sde.tw

Consultants: uis United Integrated Services

Note:

Mark	Date	Description
DN	2013/04/01	SD Submission
DN	2013/07/01	DDc Submission
ST	2013/11/01	DD Submission
ST	2014/03/03	CD Submission
ST	2014/04/30	CD Submission
ST	2014/06/02	CD Submission

Drawn by	RAYS
Checked by	-
Scale	1:60
Unit	mm

DWG. Title: LIGHTING PLAN GROUND LEVEL

DWG. No. EL-402

PAGE 205

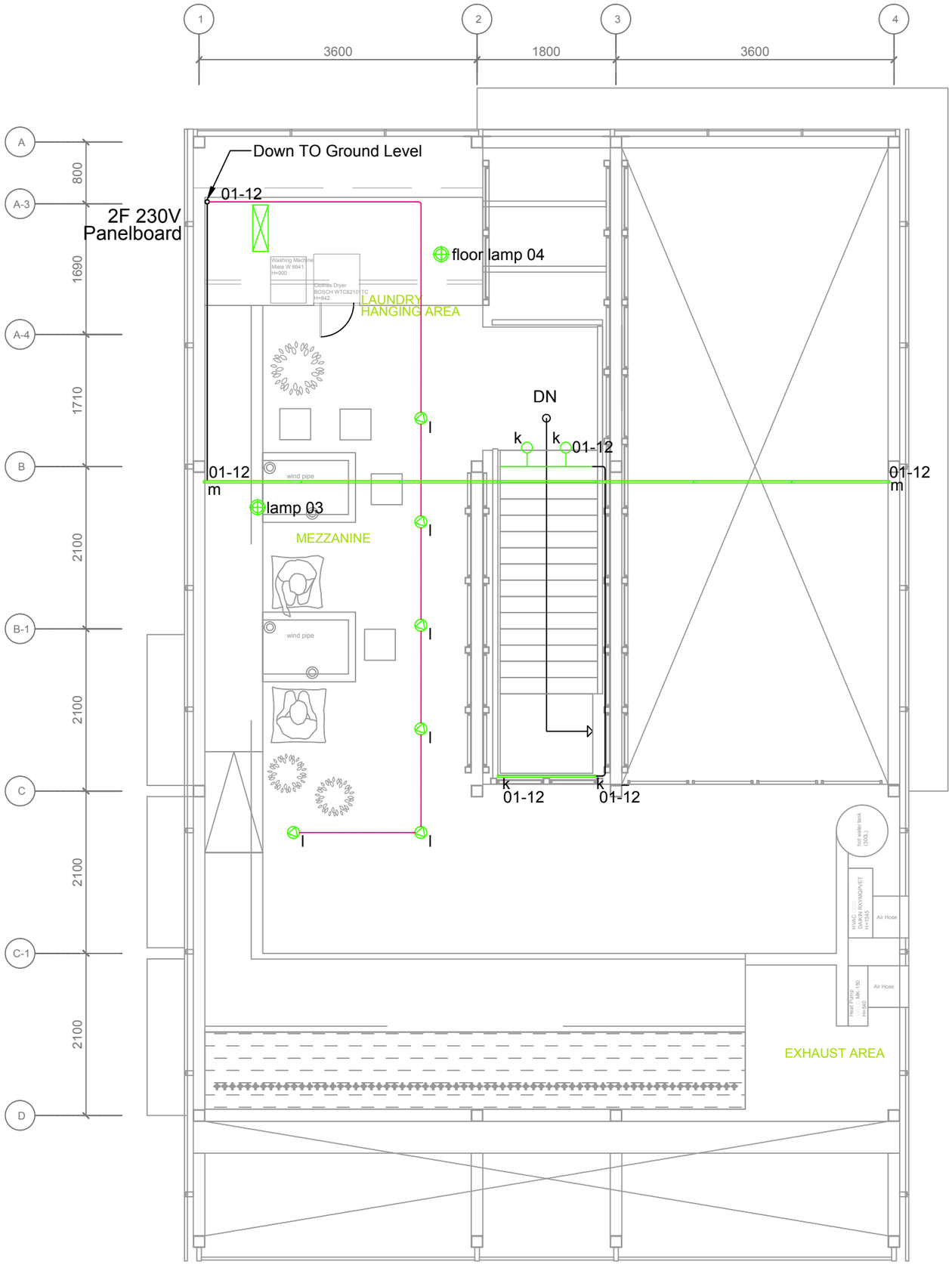

SYMBOL & LEGEND

- Tons LSP-3106 / 7.2W / Warm White AC 100~240V, Wall mounted / 4000k
- Tons T8 LED / 1270mm 20W/4000k AC 100~240V, Wall mounted
- Tons T8 LED /995mm 20W/4000k AC 100~240V, Wall mounted
- Tons KA-112R / 3.6W Warm White AC 100~240V, Wall mounted / 4000k
- Tons DA-504AD / 1.2W / Warm White AC 100~240V, Recess mounted / 4000k
- Tons DG-913C / 12.6W / Warm White AC 100~240V, Recess mounted / 4000k
- Tons ODL-005 / 1.2W / Warm White AC 100~240V, Recess mounted / 4000k
- Delta A60 / DF 10W AC 100~240V / E27 / 4000k
- Sa — Lighting Switch, single-cut
- S3a — Lighting Switch, double-cut
- 230V Electrical Panelboard
- Branch Circuit (concealed in Ceiling or Wall)
- Branch Circuit (Exposed on Wall)

LOOP NUMBER

01-03 — CIRCUIT NUMBER
└ PANEL NUMBER

PANEL NUMBER

01-- 1F 230V Panelboard
02-- 2F 230V Panelboard

Solar Decathlon Europe

Project: ORCHID HOUSE

Institution: 國立交通大學 National Chiao Tung University

NCTU Architecture 國立交通大學建築研究所

Team Name: NCTU/UNICODE
Address: 1001 Ta-Hsueh Road Hsinchu City 30010 Taiwan
Contact: www.sde.tw

Consultants: uis United Integrated Services

Note:

Mark	Date	Description
DN	2013/04/01	SD Submission
DN	2013/07/01	DDc Submission
ST	2013/11/01	DD Submission
ST	2014/03/03	CD Submission
ST	2014/04/30	CD Submission
ST	2014/06/02	CD Submission

Drawn by	RAYS
Checked by	-
Scale	1:60
Unit	mm

DWG. Title: LIGHTING PLAN MEZZANINE LEVEL

DWG. No. EL-403

PAGE 206

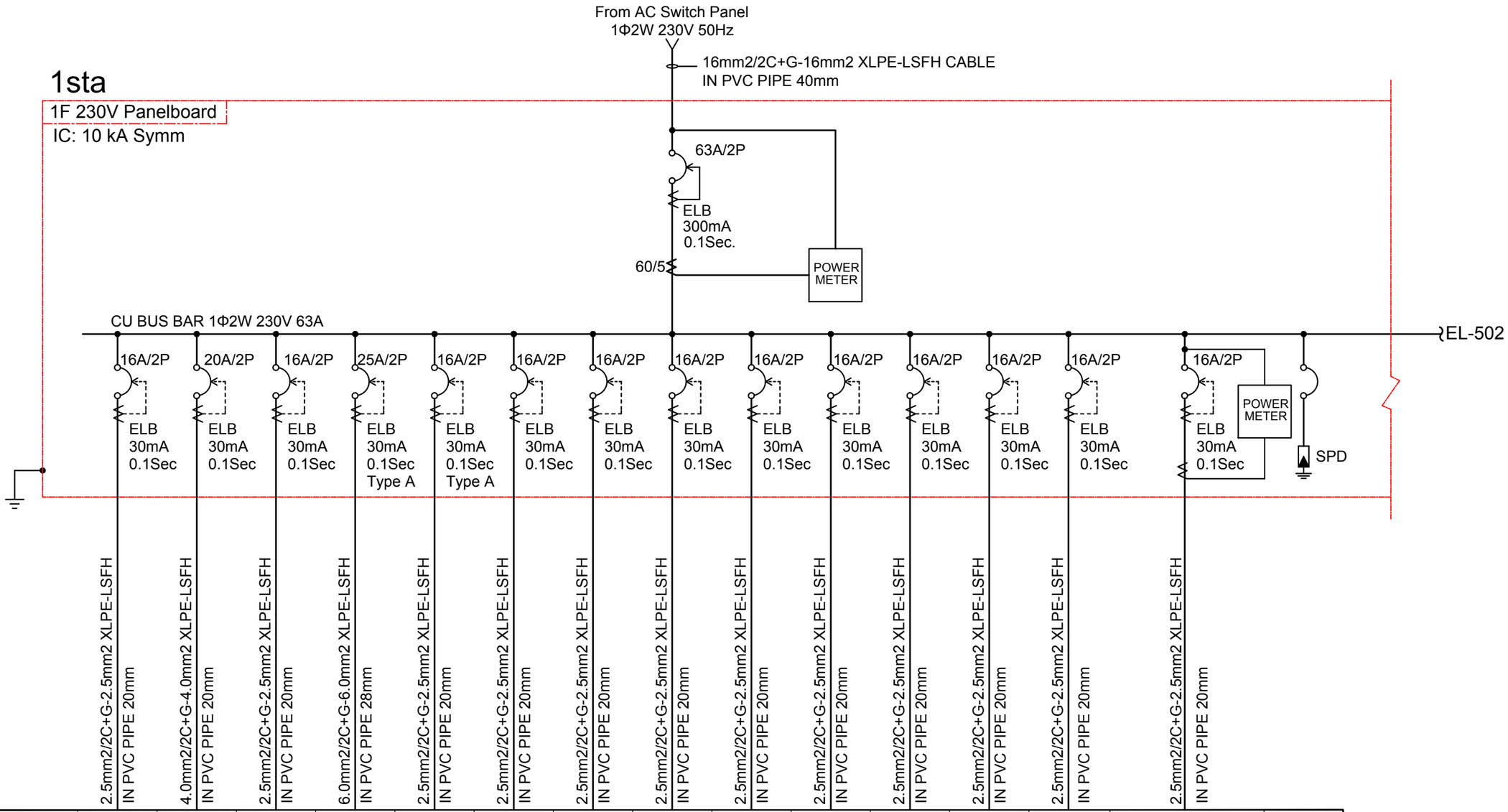

CIRCUIT NO.	1	2	3	4	5	6	7	8	9	10	11	12	13	14	15
DESCRIPTION	Refrigeration	OVEN	Dishwasher	Cooking	Clothes Washer	Clothes Dryer	Extractor hood	Kitchen& Bathroom Lighting	Living room Lighting	Bed room & Workstation Lighting	Outdoor Lighting	Mezzanine Space Lighting	Automation System	Lving Room & Workstation Receptacle (Home Electronics)	SPD
LOAD(W)	308W	3500W	2110W	1800W	1400W	1000W	260W	651W	360W	690W	8.4W	519W	-	-	-
CURRENT (A)	-	-	-	-	-	-	-	-	-	-	-	-	-	-	-
VOLTAGE (V)	230V	230V	230V	230V	230V	230V	230V	230V	230V	230V	230V	230V	230V	230V	230V

Solar Decathlon Europe

Project: ORCHID HOUSE

Institution: 國立交通大學 National Chiao Tung University

NCTU Architecture 國立交通大學建築研究所

Team Name: NCTU/UNICODE
Address: 1001 Ta-Hsueh Road Hsinchu City 30010 Taiwan
Contact: www.sde.tw

Consultants: uis United Integrated Services

Note:

Mark	Date	Description
DN	2013/04/01	SD Submission
DN	2013/07/01	DDc Submission
ST	2013/11/01	DD Submission
ST	2014/03/03	CD Submission
ST	2014/04/30	CD Submission
ST	2014/06/02	CD Submission

Drawn by: RAYS
Checked by: -
Scale: -
Unit: -

DWG. Title: ONE-LINE DIAGRAM 1

DWG. No.: EL-501

PAGE: 207

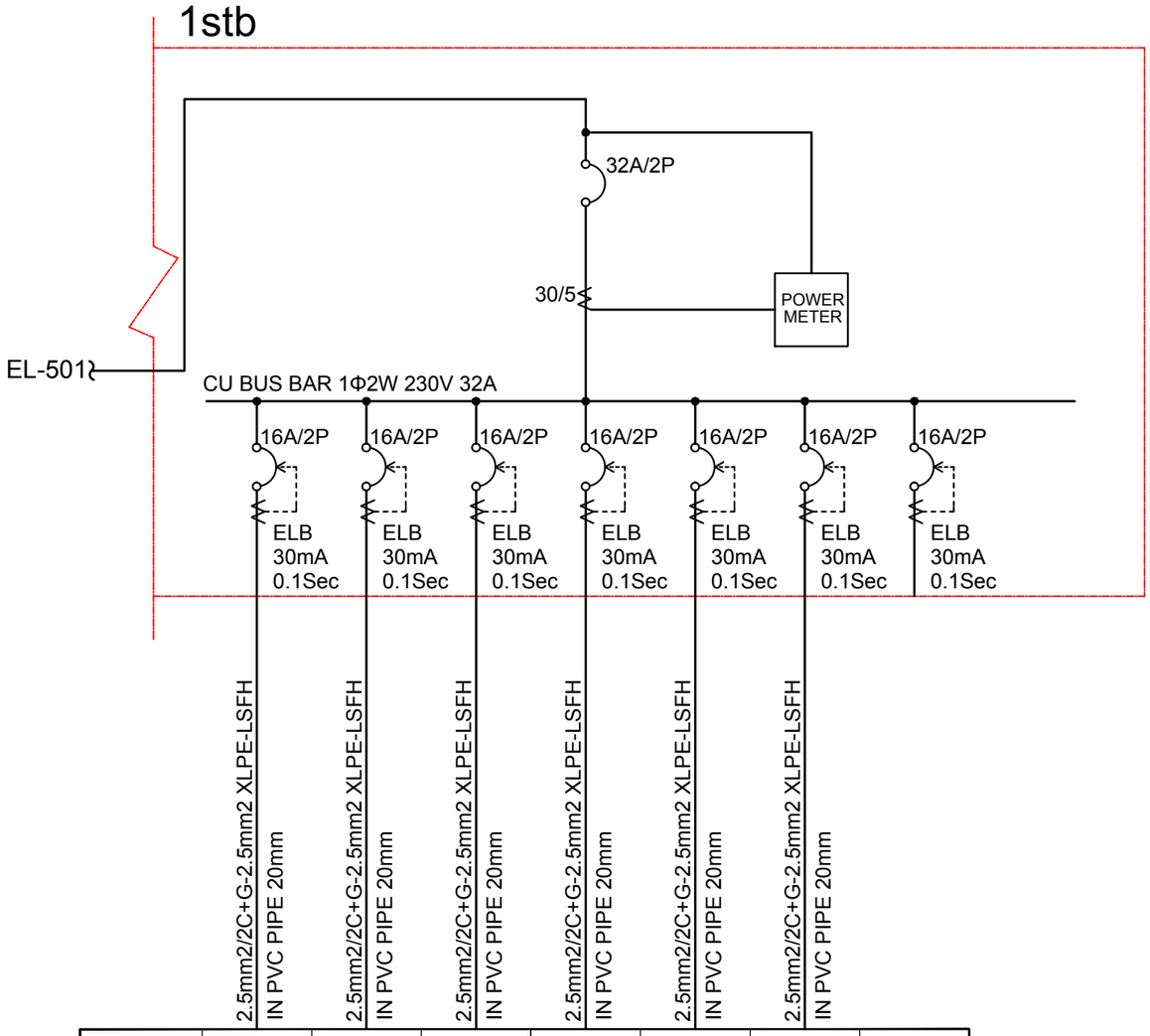

CIRCUIT NO.	16	17	18	19	20	21	22
DESCRIPTION	Clean Water Pump	Rain Water Pump & Level relay	BathRoom & Tea Terrace Receptacle	Floor Receptacle (General Use)	Tea Terrance & Mech. RM Lighting	Control Valve (For irrigation)	SPARE
LOAD(W)	540W	270W	-	-	8.4W	-	-
CURRENT (A)	-	-	-	-	-	-	-
VOLTAGE (V)	230V	230V	230V	230V	230V	230V	230V

ELECTRICAL SYMBOLS

- LOW VOLTAGE MOLDED CASE CIRCUIT BREAKER
- LOW VOLTAGE MOLDED CASE CIRCUIT BREAKER WITH GROUND FAULT CIRCUIT INTERRUPTER (GFCI)
- GROUNDING
- CURRENT TRANSFORMER
- TRANSFORMER
- LOW VOLTAGE FUSE
- LSFH CABLE — 0.6/1KV LOW SMOKE FREE OF HALOGEN CABLE
- Surge Protection Device

Solar Decathlon Europe

Project: ORCHID HOUSE

Institution: 國立交通大學 National Chiao Tung University

NCTU Architecture 國立交通大學建築研究所

Team Name: NCTU/UNICODE
Address: 1001 Ta-Hsueh Road Hsinchu City 30010 Taiwan
Contact: www.sde.tw

Consultants: UIS United Integrated Services

Note:

Mark	Date	Description
DN	2013/04/01	SD Submission
DN	2013/07/01	DDc Submission
ST	2013/11/01	DD Submission
ST	2014/03/03	CD Submission
ST	2014/04/30	CD Submission
ST	2014/06/02	CD Submission

Drawn by: RAYS
Checked by: -
Scale: -
Unit: -

DWG. Title: ONE-LINE DIAGRAM 2

DWG. No.: EL-502

PAGE: 208

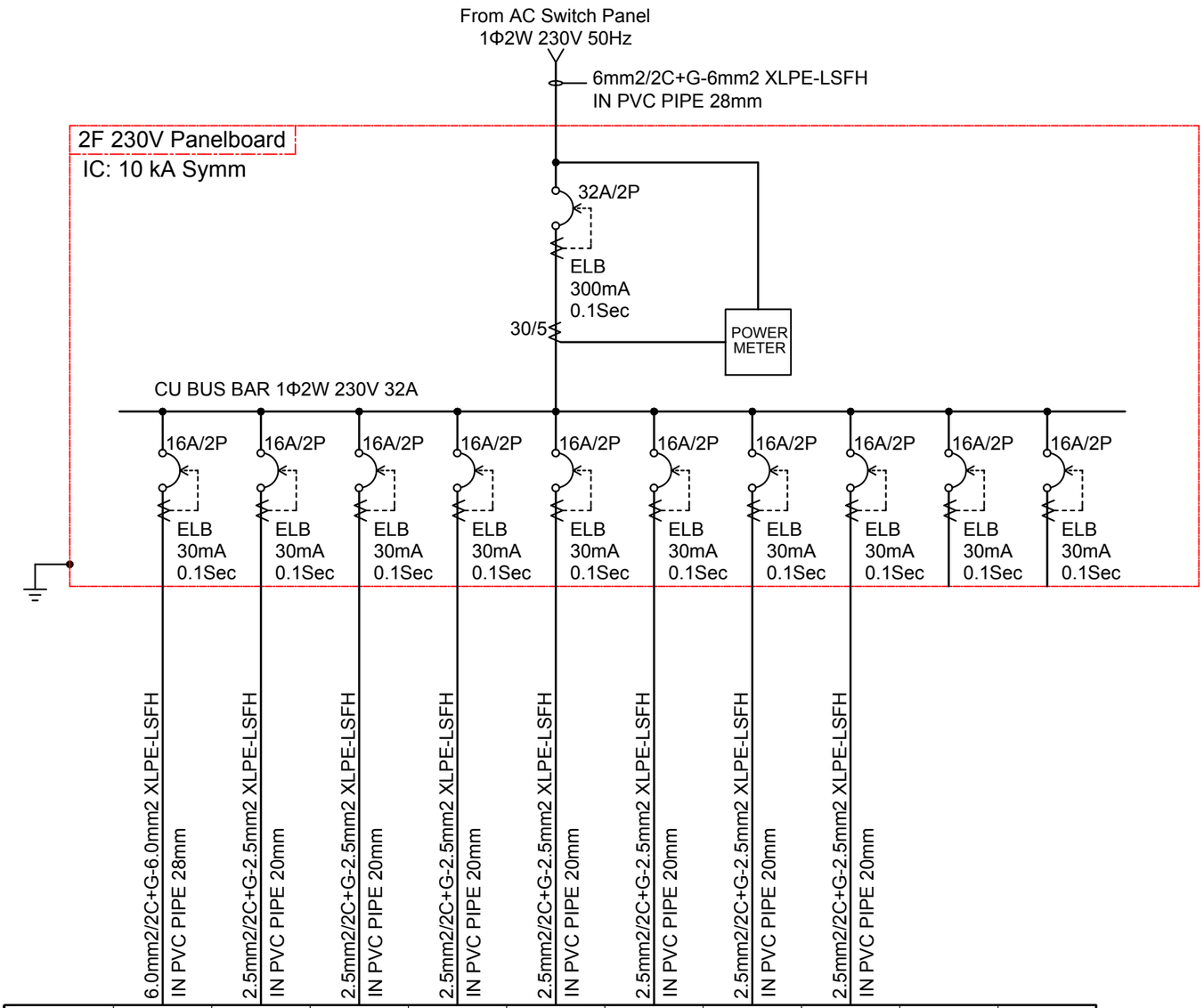

CIRCUIT NO.	1	2	3	4	5	6	7	8	9	10
DESCRIPTION	VRV	HRV	CO2 Heat Pump	Mezzanine Area Receptacle	Pump Station 01	Pump Station 02	Circulation FANx12	Water wall Pump	Spare	Spare
LOAD(W)	2760W	100W	1340W	-	550W	550W	480W	550W	-	-
CURRENT (A)	-	-	-	-	-	-	-	-	-	-
VOLTAGE (V)	230V	230V	230V	230V	230V	230V	230V	230V	230V	230V

ELECTRICAL SYMBOLS

- LOW VOLTAGE MOLDED CASE CIRCUIT BREAKER
- LOW VOLTAGE MOLDED CASE CIRCUIT BREAKER WITH GROUND FAULT CIRCUIT INTERRUPTER (GFCI)
- GROUNDING
- CURRENT TRANSFORMER
- TRANSFORMER
- LOW VOLTAGE FUSE
- LSFH CABLE — 0.6/1KV LOW SMOKE FREE OF HALOGEN CABLE
- Surge Protection Device

Solar Decathlon Europe

Project: ORCHID HOUSE

Institution: 國立交通大學 National Chiao Tung University

NCTU Architecture 國立交通大學建築研究所

Team Name: NCTU/UNICODE
Address: 1001 Ta-Hsueh Road Hsinchu City 30010 Taiwan
Contact: www.sde.tw

Consultants: United Integrated Services

Note:

Mark	Date	Description
DN	2013/04/01	SD Submission
DN	2013/07/01	DDc Submission
ST	2013/11/01	DD Submission
ST	2014/03/03	CD Submission
ST	2014/04/30	CD Submission
ST	2014/06/02	CD Submission

Drawn by: RAYS
Checked by: -
Scale: -
Unit: -

DWG. Title: ONE-LINE DIAGRAM 3

DWG. No.: EL-503

PAGE: 209

Tag	Components	Manufacturer	Model	Q'ty	Notes
①	PV Module	NSP	D6P250B3A	20	
②	DC Protections	HI BOX		1	
③	Inverter	Delta	Solivia 5.0	1	
④	Box	HI BOX		1	
	Power Meter	Schneider	PM3200	3	
	ELCB	Schneider		4	
	Surge Protection Device	Shihlin	BHP30 1PN	2	Uc:275V,Up□1.2kV,In:15kA(8/20us)
⑤	BESS	Delta	RenE-ES 6120	1	Battery Energy Storage System

Labels for pv installations:

ON AC SIDE	
On AC side, insert this label near the main AC photovoltaic circuit breaker or near the main AC photovoltaic switch	Production photovoltaïque / Coupure réseau de Distribution or Coupure photovoltaïque
On AC side, insert this label(near the main circuit breaker) if a main circuit breaker cut off simultaneously photovoltaic and electrical loads	Coupure réseau de distribution et photovoltaïque

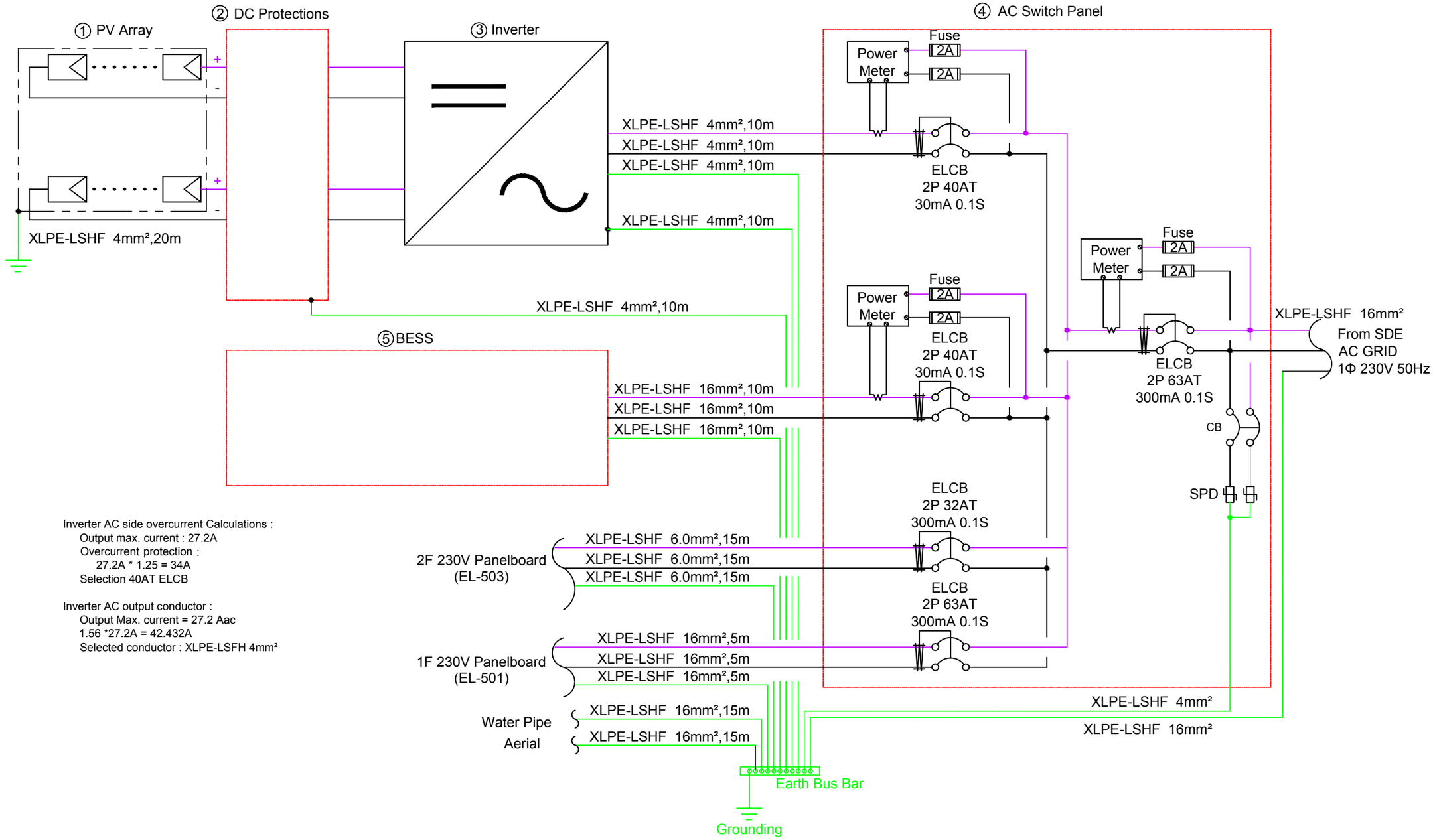

Inverter AC side overcurrent Calculations :
Output max. current : 27.2A
Overcurrent protection :
27.2A * 1.25 = 34A
Selection 40AT ELCB

Inverter AC output conductor :
Output Max. current = 27.2 Aac
1.56 *27.2A = 42.432A
Selected conductor : XLPE-LSFH 4mm²

Solar Decathlon Europe

Project: ORCHID HOUSE

Institution: 國立交通大學 National Chiao Tung University

NCTU Architecture 國立交通大學建築研究所

Team Name: NCTU/UNICODE
Address: 1001 Ta-Hsueh Road Hsinchu City 30010 Taiwan
Contact: www.sde.tw

Consultants: uis United Integrated Services

Note:

Mark	Date	Description
DN	2013/04/01	SD Submission
DN	2013/07/01	DDc Submission
ST	2013/11/01	DD Submission
ST	2014/03/03	CD Submission
ST	2014/04/30	CD Submission
ST	2014/06/02	CD Submission

Drawn by: RAYS
Checked by: RAYS
Scale: -
Unit: -

DWG. Title: AC Circuit Layout

DWG. No.: EL-601
PAGE: 210

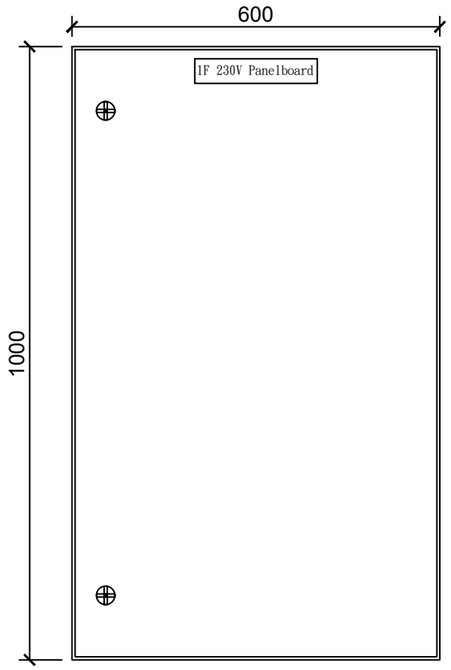

1F 230V Panelboard
Front View

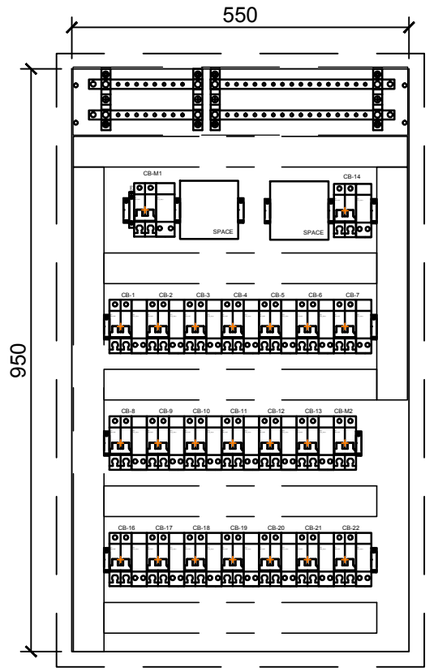

1F 230V
Panelboard

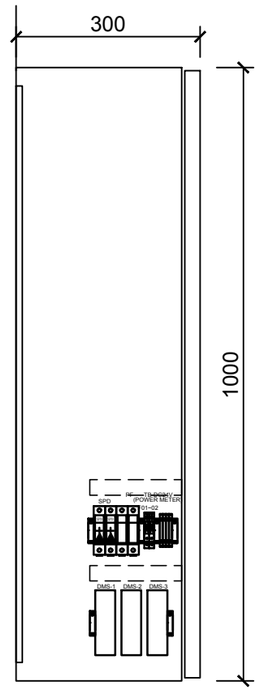

1F 230V Panelboard
Side View

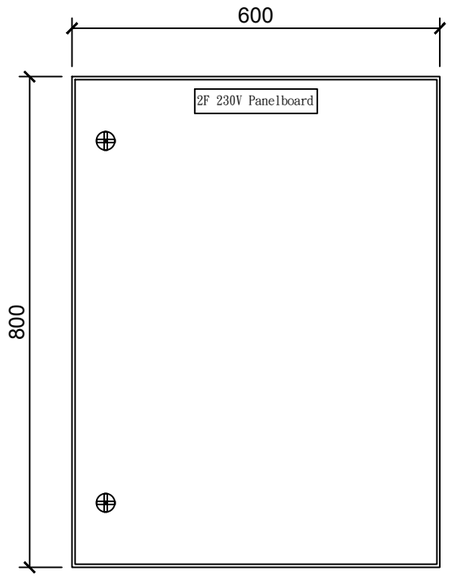

2F 230V Panelboard
Front View

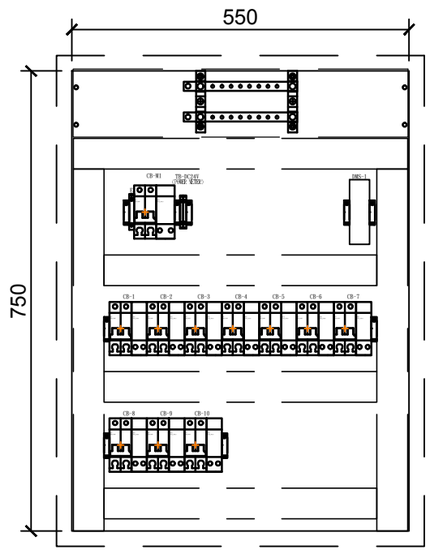

2F 230V
Panelboard

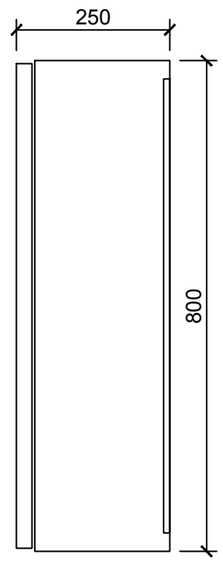

2F 230V Panelboard
Side View

Solar Decathlon Europe

Project: ORCHID HOUSE

Institution: 國立交通大學 National Chiao Tung University

NCTU Architecture 國立交通大學建築研究所

Team Name: NCTU/UNICODE

Address: 1001 Ta-Hsueh Road
Hsinchu City 30010
Taiwan

Contact: www.sde.tw

Consultants: uis United Integrated Services

Note:

Mark	Date	Description
DN	2013/04/01	SD Submission
DN	2013/07/01	DDc Submission
ST	2013/11/01	DD Submission
ST	2014/03/03	CD Submission
ST	2014/04/30	CD Submission
ST	2014/06/02	CD Submission

Drawn by: RAYS

Checked by: RAYS

Scale: -

Unit: -

DWG. Title: AC CIRCUIT LAYOUT

DWG. No.: EL-602

PAGE: 211

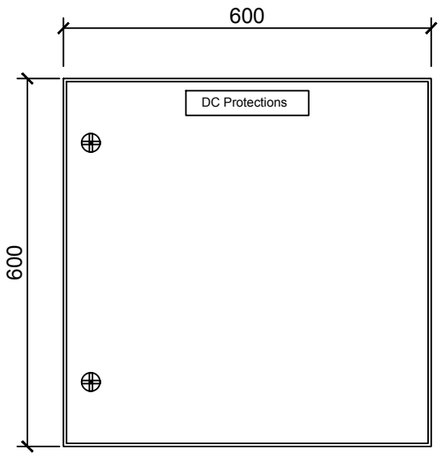

AC Circuit Panel
Front View

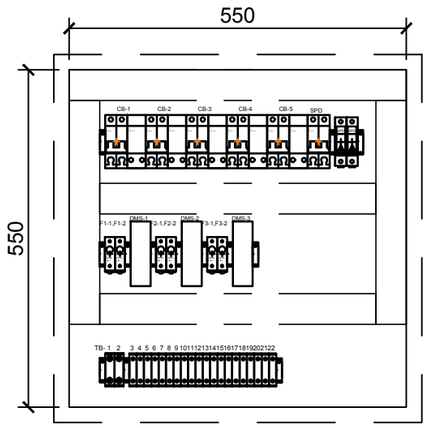

AC Circuit Panel

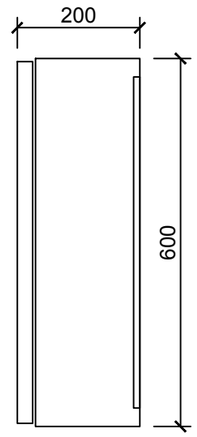

AC Circuit Panel
Side View

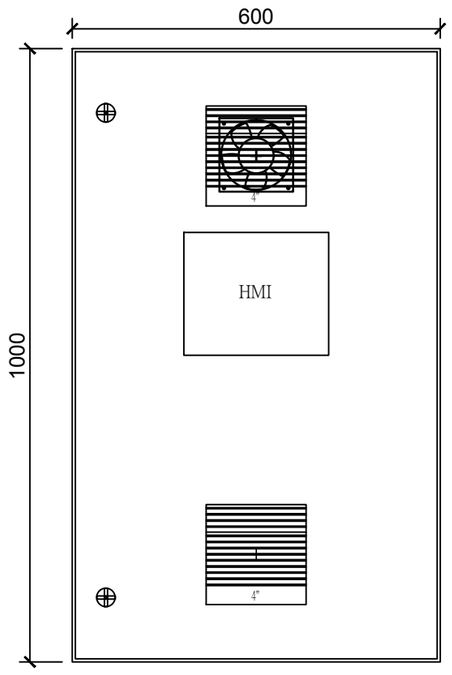

BAS Panel
Front View

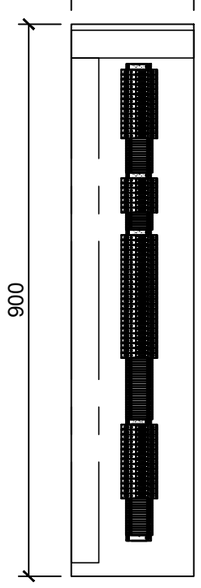

BAS Panel Left
Side View

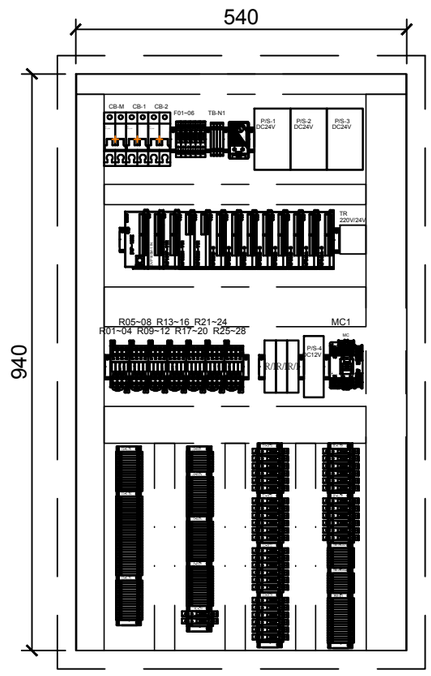

BAS Panel

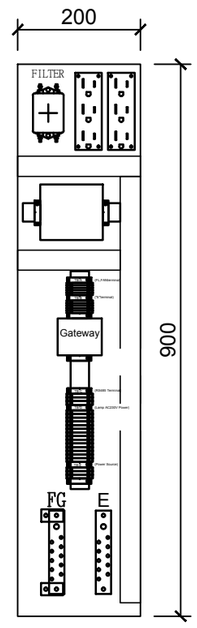

BAS Panel Right
Side View

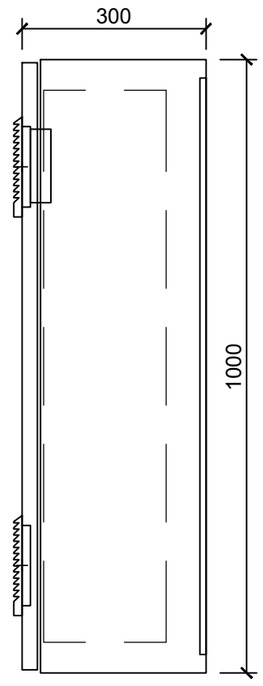

BAS Panel
Side View

Solar Decathlon Europe

Project: ORCHID HOUSE

Institution: 國立交通大學 National Chiao Tung University

NCTU Architecture 國立交通大學建築研究所

Team Name: NCTU/UNICODE

Address: 1001 Ta-Hsueh Road
Hsinchu City 30010
Taiwan

Contact: www.sde.tw

Consultants: uis United Integrated Services

Note:

Mark	Date	Description
DN	2013/04/01	SD Submission
DN	2013/07/01	DDc Submission
ST	2013/11/01	DD Submission
ST	2014/03/03	CD Submission
ST	2014/04/30	CD Submission
ST	2014/06/02	CD Submission

Drawn by	RAYS
Checked by	RAYS
Scale	-
Unit	-

DWG. Title: AC CIRCUIT LAYOUT

DWG. No. EL-603

PAGE 212

Tag	Components	Manufacturer	Model	Q'ty	Notes
①	PV Module	NSP	D6P250B3A	20	
②	DC Protections			1	
③	Inverter	Delta	Solivia 5.0	1	
④	Box			1	
	Power Meter	Archmeter	PA33	3	
	ELCB	Schneider		5	
	Surge Protection Device	Shihlin	BHP40, 2P	1	Uc:275V,Up□1.4kV,In:20kA(8/20us)
⑤	BESS	Delta	RenE-ES 6120	1	Battery Energy Storage System

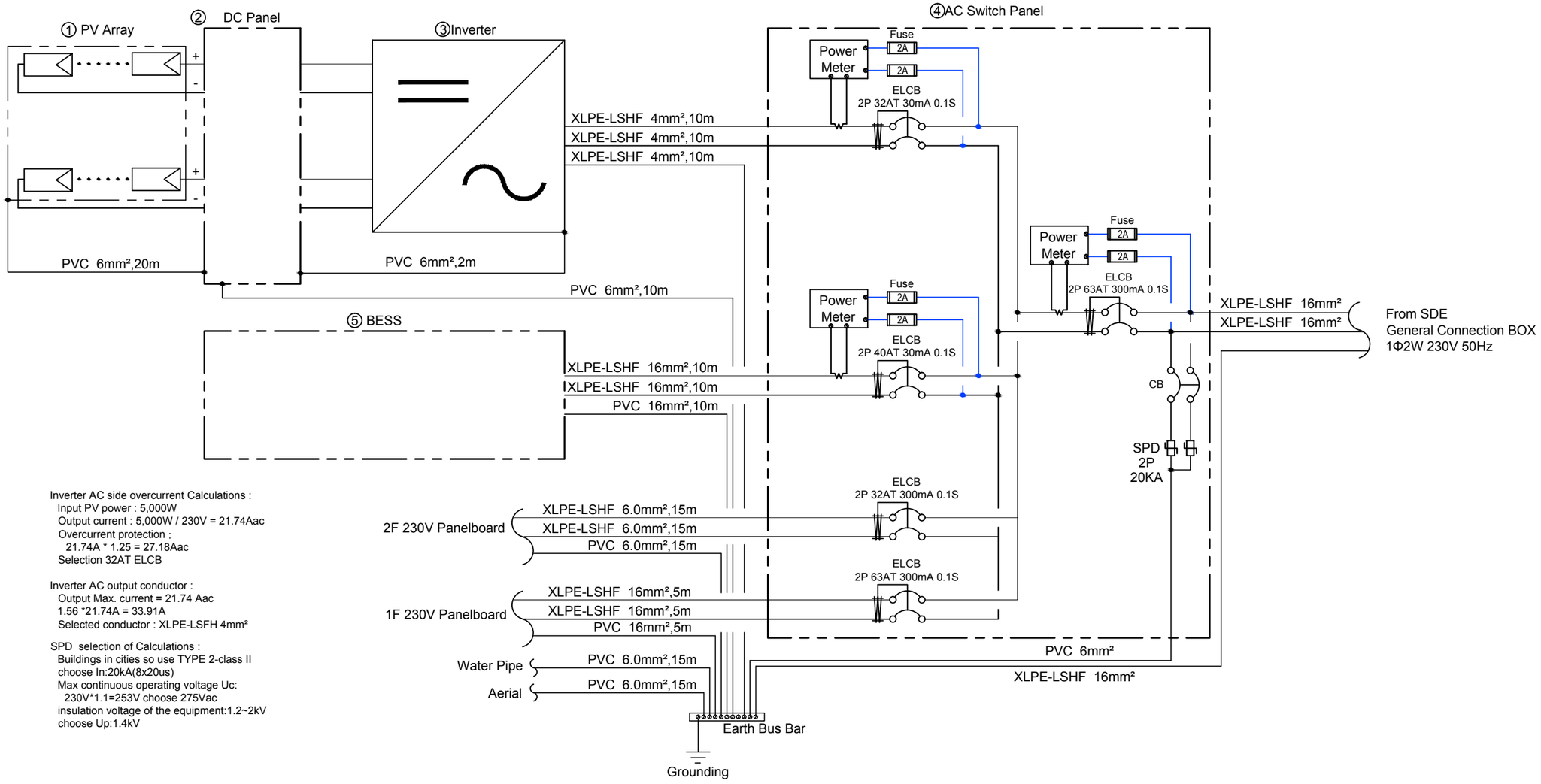

Inverter AC side overcurrent Calculations :
Input PV power : 5,000W
Output current : 5,000W / 230V = 21.74Aac
Overcurrent protection :
21.74A * 1.25 = 27.18Aac
Selection 32AT ELCB

Inverter AC output conductor :
Output Max. current = 21.74 Aac
1.56 *21.74A = 33.91A
Selected conductor : XLPE-LSFH 4mm²

SPD selection of Calculations :
Buildings in cities so use TYPE 2-class II
choose In:20kA(8x20us)
Max continuous operating voltage Uc:
230V*1.1=253V choose 275Vac
insulation voltage of the equipment:1.2~2kV
choose Up:1.4kV

Solar Decathlon Europe

Project: ORCHID HOUSE

Institution: 國立交通大學 National Chiao Tung University

NCTU Architecture 國立交通大學建築研究所

Team Name: NCTU/UNICODE
Address: 1001 Ta-Hsueh Road Hsinchu City 30010 Taiwan
Contact: www.sde.tw

Consultants: DELTA 台達電子工業股份有限公司 DELTA ELECTRONICS, INC.

Note:

Mark	Date	Description
DN	2013/04/01	SD Submission
DN	2013/07/01	DDc Submission
ST	2013/11/01	DD Submission
ST	2014/03/03	CD Submission
ST	2014/04/30	CD Submission
ST	2014/06/02	CD Submission

Drawn by: AW
Checked by: -
Scale: -
Unit: -

DWG. Title: PHOTOVOLTAIC SYSTEM: GENERAL 1

DWG. No.: PV-001

PAGE: 213

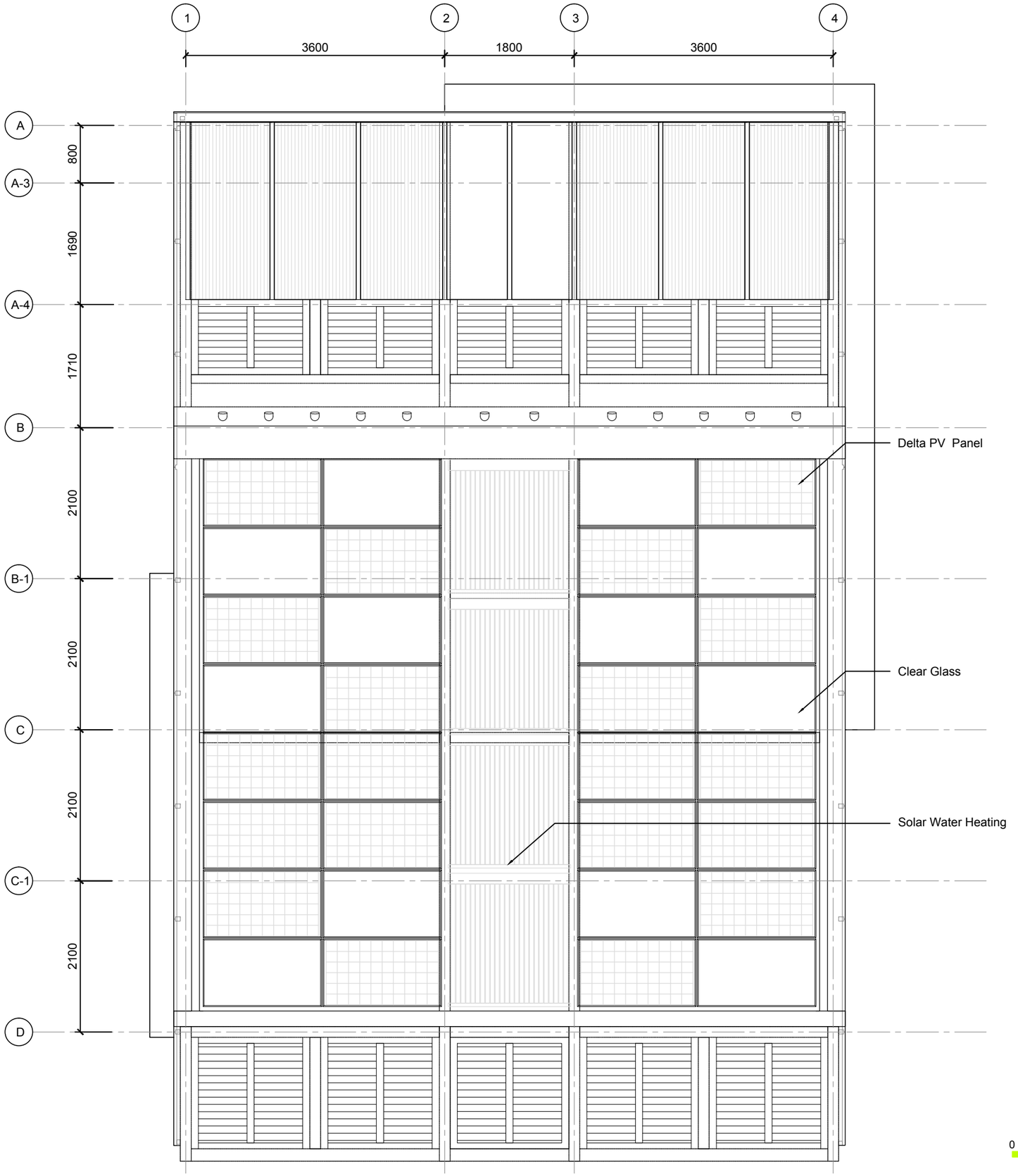

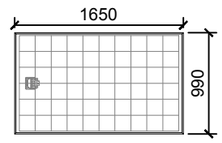

Solar Module

System Design Data	
Module Type	Standard
Module Power	250 Wp
Number of Module	20 pieces
Inverter Type	Solivia 5.0
Number of Inverter	1
System Capacity	5 kWp
Tilt Angle of Modules	18°
Azimuth of Modules	South
System Type	On Grid

0 1 2 5 METER

Solar Decathlon Europe

Project: ORCHID HOUSE

Institution: 國立交通大學 National Chiao Tung University

NCTU Architecture 國立交通大學建築研究所

Team Name: NCTU/UNICODE

Address: 1001 Ta-Hsueh Road Hsinchu City 30010 Taiwan

Contact: www.sde.tw

Consultants: DELTA 台達電子工業股份有限公司 DELTA ELECTRONICS, INC.

Note:

Mark	Date	Description
DN	2013/04/01	SD Submission
DN	2013/07/01	DDc Submission
ST	2013/11/01	DD Submission
ST	2014/03/03	CD Submission
ST	2014/04/30	CD Submission
ST	2014/06/02	CD Submission

Drawn by	CF
Checked by	DN
Scale	1:60
Unit	mm

DWG. Title: PHOTOVOLTAIC SYSTEM: GENERAL 2

DWG. No. PV-002

PAGE 214

Tag	Components	Manufacturer	Model	Q'ty	Notes
①	SDE Grid			1	Organization Supplied Grid Power
②	Power Meter	Archmeter	PA33	1	
③	PV array	NSP	D6P250B3A	20	
④	DC Panel			1	
⑤	Inverter	Delta	Solivia 5.0	1	
⑥	Power Meter	Archmeter	PA33	2	
⑦	BESS	Delta	RenE-ES 6120	1	Battery Energy Storage System

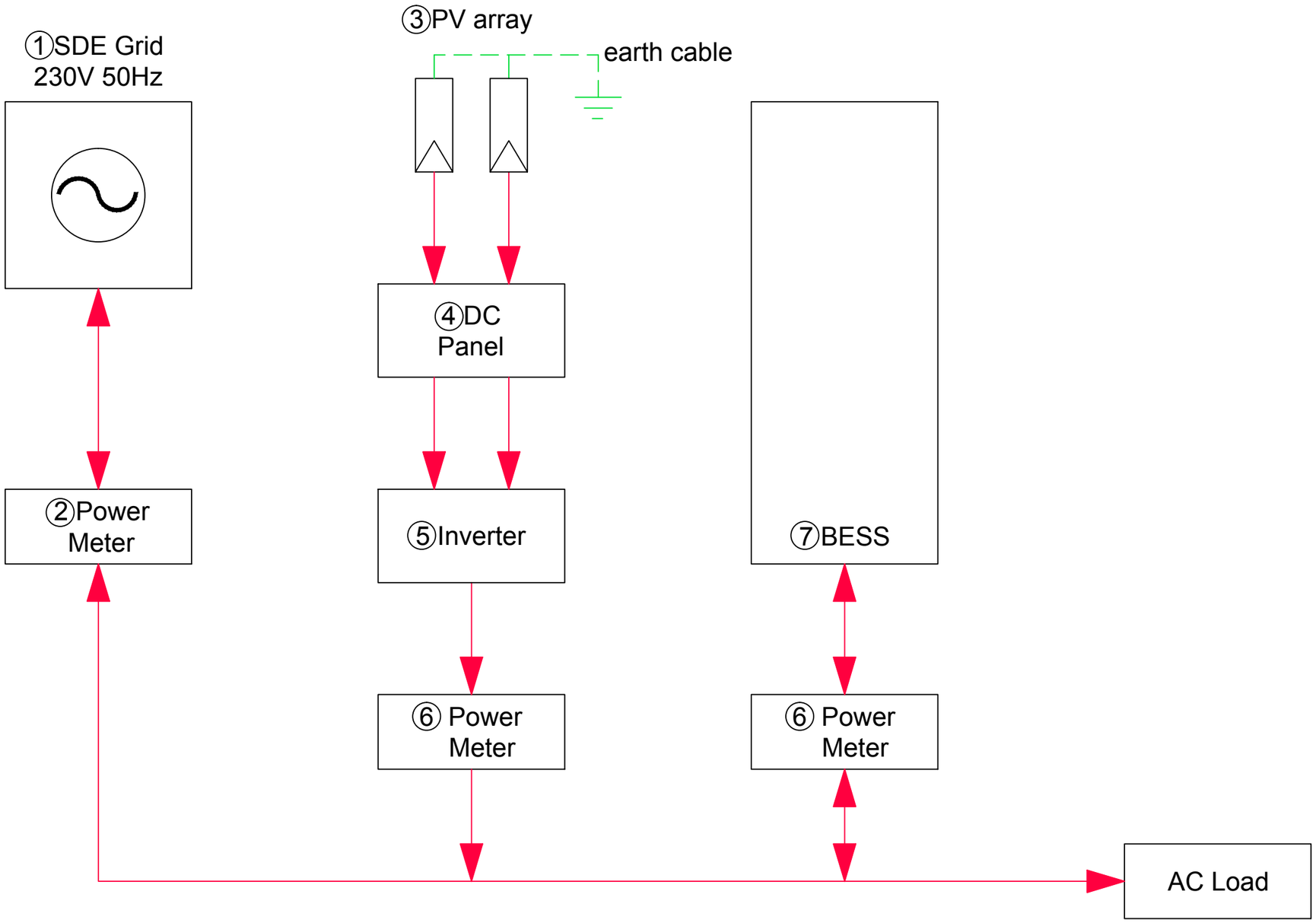

Solar Decathlon Europe

Project: ORCHID HOUSE

Institution: 國立交通大學 National Chiao Tung University

NCTU Architecture 國立交通大學建築研究所

Team Name: NCTU/UNICODE

Address: 1001 Ta-Hsueh Road Hsinchu City 30010 Taiwan

Contact: www.sde.tw

Consultants:

Delta.jpg

台達電子工業股份有限公司 DELTA ELECTRONICS, INC.

Note:

Mark	Date	Description
DN	2013/04/01	SD Submission
DN	2013/07/01	DDc Submission
ST	2013/11/01	DD Submission
ST	2014/03/03	CD Submission
ST	2014/04/30	CD Submission

Drawn by: AW

Checked by: -

Scale: -

Unit: -

DWG. Title: PHOTOVOLTAIC SYSTEM: GENERAL 3

DWG. No.: PV-003

PAGE: 215

Tag	Components	Manufacturer	Model	Q'ty	Notes
①	PV Module	NSP	D6P250B3A	20	
②	Box			1	
	Fuse			4	DC1000V 15A
	Surge Protection Device	ABB	OVR PV 40-600 P	2	Uc:670V,Up:1.4kV,In:20kA(8/20us)
	Disconnector Switch	MERZ	MDC1A-025-600	2	DC600V 25A
③	Inverter	Delta	Solivia 5.0	1	

Photovoltaic Module :
NSP D6P250B3A
Max. DC power = 250Wp
Voc = 37.33 V
Vmp = 30.34 V
Isc = 8.69 A
Temp. Coeff. of Voc = -0.117 V/°C
Temp. Coeff. of Isc = 0.004 A/°C
Temp. Coeff. of Vmp = -0.127 V/°C
Module Efficiency = 15.3 %

Inverter :
Delta Solivia 5.0
Max. input power = 6,000Wp
Input Voltage range = 125 ~ 600V
Full power MPP range = 150 ~ 480V
Max. current = 36.6A
DC connector = 2 pairs
Nominal apparent power = 5,000VA
Voltage range = 184~264Vac
AC output frequency = 50 Hz
Max. current = 27.2 Aac
Max. efficiency = 96.1%
EU efficiency = 94.6%

Voltage Calculations :
Voc @ coldest expected operating Temp.:
Low ambient Temp. = -20˚C
Voc(-20°C)=Voc(STC)+(-20°C-25°C)*(ΔVoc/°C)=37.33-45*(-0.117) = 42.595V
Max. modules of string:
nmax=Vdc(input max)/Voc(-20°C)=600/42.595=14.086 choose 14pcs
Vmp @ highest expected operating Temp.:
High ambient Temp. = 75˚C
Vmp(75°C)=Vmp(STC)+(75°C-25°C)*(ΔVmp/°C)=30.34+50*(-0.127) = 23.99V
Min. modules of string:
nmin=Vmp(min)/Vmp(75°C)=150/23.99=6.25 choose 7pcs
Selection modules of string = 10 pcs

Voc(-20°C)_string = Modules*Voc(-20°C) = 10*42.595V = 425.95V < 600V

Vmp(75°C)_string = Modules*(75°C) = 10*23.99V = 239.9V > 150V

String in parallel :
Max. DC power of Charge Controller / Selection modules of string / Module Max. DC power
= 5,000W / 10pcs / 250W
= 2.0 ≤ 2parallel

DC array conductor :
1.56 * Isc * 2 = 1.56 * 8.69A * 2 = 27.11A
Selected conductor : solar cable 4mm²

Labels for pv installations:

ON DC SIDE
All the junction boxes and DC electrical cabling must indicate live conductors or the internal parts of the boxes can remain live even after the opening of the DC switch.

On the front of all junction boxes, insert a label:
"Attention, cables courant continu sous tension"

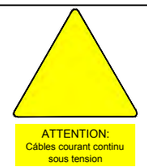

In all the junction boxes and in all the DC disconnect boxes, insert a label:
"Ne pas manoeuvrer en charge"

ON THE INVERTERS
All the inverters shall have clear markings specifying that before all work, all the voltage sources must be electrically isolated.

Insert this label on the inverter front.

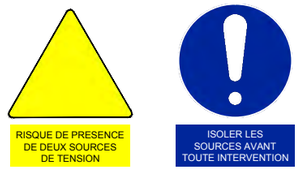

SPD selection of Calculations :
Buildings in cities so use TYPE 2-class II
choose In:20kA(8/20us)
Max continuous operating voltage Uc:
426V*1.1=468.6V choose 670Vdc
insulation voltage of the equipment:1.2~2kV
choose Up:1.4kV

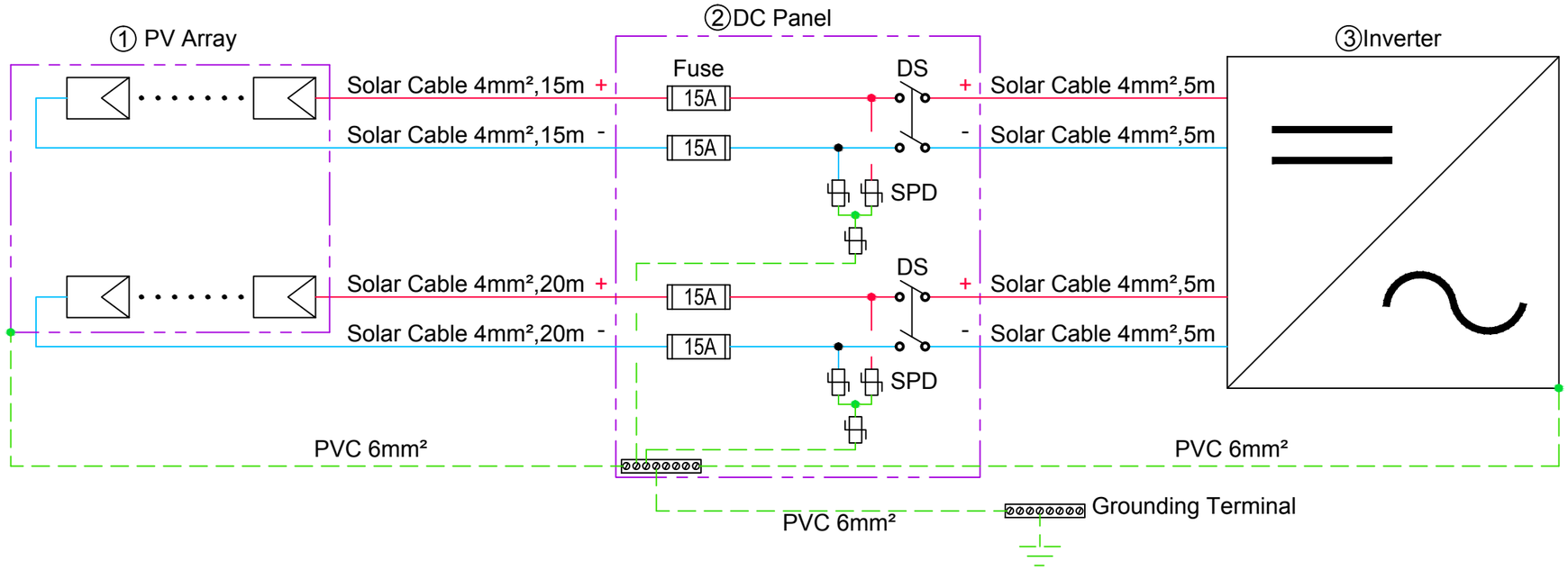

Solar Decathlon Europe

Project: ORCHID HOUSE

Institution: 國立交通大學 National Chiao Tung University

NCTU Architecture 國立交通大學建築研究所

Team Name: NCTU/UNICODE
Address: 1001 Ta-Hsueh Road Hsinchu City 30010 Taiwan
Contact: www.sde.tw

Consultants:

Delta.jpg
台達電子工業股份有限公司
DELTA ELECTRONICS, INC.

Note:

Mark	Date	Description
DN	2013/04/01	SD Submission
DN	2013/07/01	DDc Submission
ST	2013/11/01	DD Submission
ST	2014/03/03	CD Submission
ST	2014/04/30	CD Submission

Drawn by GK
Checked by -
Scale -
Unit -

DWG. Title
PHOTOVOLTAIC SYSTEM: DC CIRCUITS

DWG. No. PV-011
PAGE 216

Tag	Components	Manufacturer	Model	Q'ty	Notes
①	PV Module	NSP	D6P250B3A	20	
②	DC Protections			1	
③	Inverter	Delta	Solivia 5.0	1	
④	Box			1	
	Power Meter	Archmeter	PA33	3	
	ELCB	Schneider		5	
	Surge Protection Device	Shihlin	BHP40, 2P	1	Uc:275V,Up□1.4kV,In:20kA(8/20us)
⑤	BESS	Delta	RenE-ES 6120	1	Battery Energy Storage System

Labels for pv installations:

ON AC SIDE	
On AC side, insert this label near the main AC photovoltaic circuit breaker or near the main AC photovoltaic switch	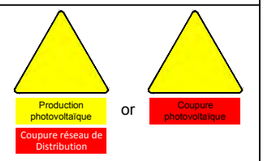
On AC side, insert this label(near the main circuit breaker) if a main circuit breaker cut off simultaneously photovoltaic and electrical loads	

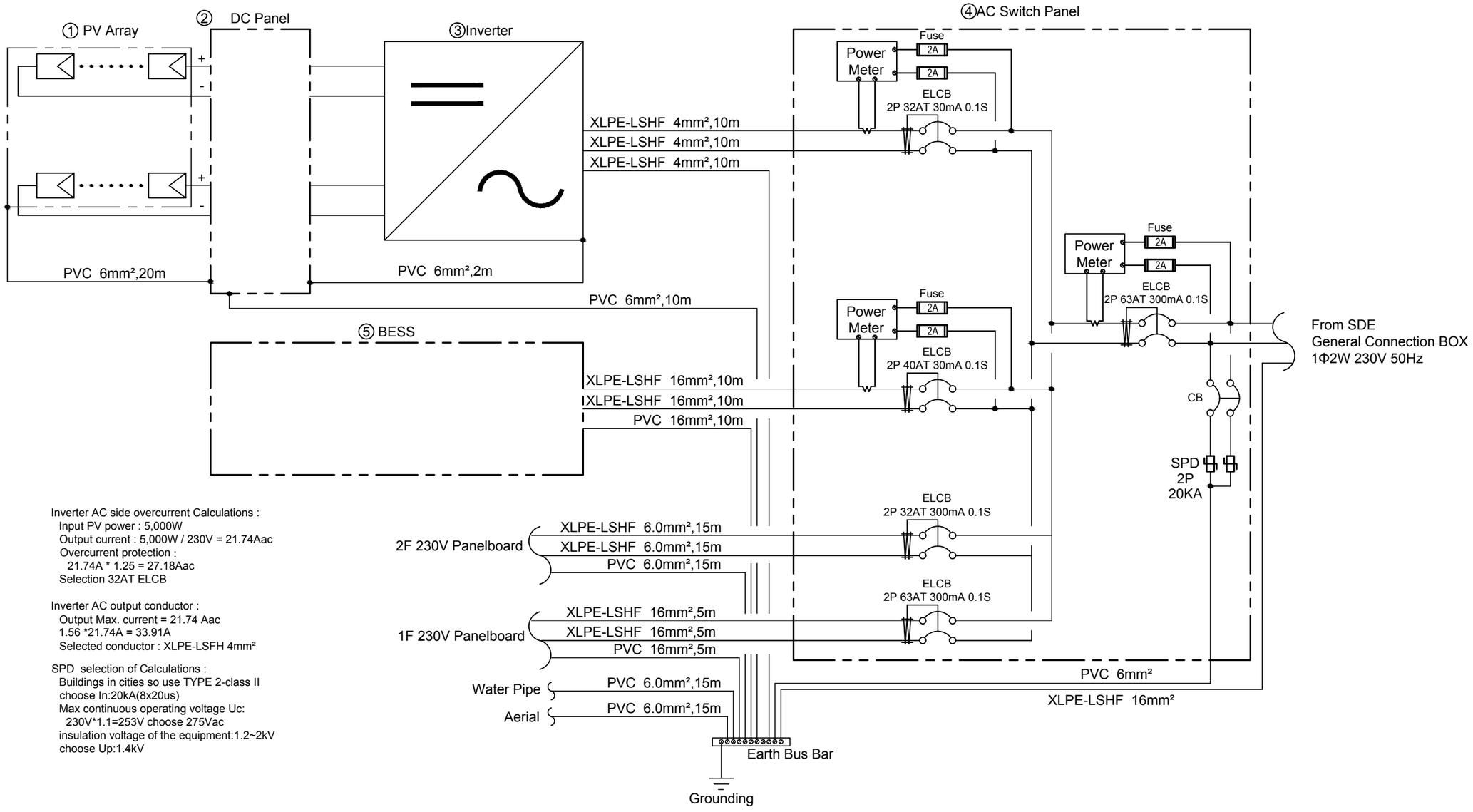

Inverter AC side overcurrent Calculations :
Input PV power : 5,000W
Output current : 5,000W / 230V = 21.74Aac
Overcurrent protection :
21.74A * 1.25 = 27.18Aac
Selection 32AT ELCB

Inverter AC output conductor :
Output Max. current = 21.74 Aac
1.56 *21.74A = 33.91A
Selected conductor : XLPE-LSFH 4mm²

SPD selection of Calculations :
Buildings in cities so use TYPE 2-class II
choose In:20kA(8x20us)
Max continuous operating voltage Uc:
230V*1.1=253V choose 275Vac
insulation voltage of the equipment:1.2~2kV
choose Up:1.4kV

Solar Decathlon Europe

Project: ORCHID HOUSE

Institution: 國立交通大學 National Chiao Tung University

NCTU Architecture 國立交通大學建築研究所

Team Name: NCTU/UNICODE
Address: 1001 Ta-Hsueh Road Hsinchu City 30010 Taiwan
Contact: www.sde.tw

Consultants:

Delta.jpg
台達電子工業股份有限公司
DELTA ELECTRONICS, INC.

Note:

Mark	Date	Description
DN	2013/04/01	SD Submission
DN	2013/07/01	DDc Submission
ST	2013/11/01	DD Submission
ST	2014/03/03	CD Submission
ST	2014/04/30	CD Submission

Drawn by	GK
Checked by	-
Scale	-
Unit	-

DWG. Title: PHOTOVOLTAIC SYSTEM: AC CIRCUITS

DWG. No. PV-021

PAGE 217

Tag	Components	Manufacturer	Model	Q'ty	Notes
①	PV Module	NSP	D6P250B3A	20	
②	DC Protections			1	
③	Inverter	Delta	Solivia 5.0	1	
④	Box			1	
	Power Meter	Archmeter	PA33	3	
	ELCB	Schneider		5	
	Surge Protection Device	Shihlin	BHP40, 2P	1	Uc:275V,Up□1.4kV,In:20kA(8/20us)
⑤	BESS	Delta	RenE-ES 6120	1	Battery Energy Storage System

Labels for pv installations:

ON AC SIDE	
On AC side, insert this label near the main AC photovoltaic circuit breaker or near the main AC photovoltaic switch	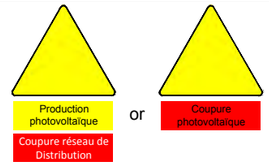
On AC side, insert this label(near the main circuit breaker) if a main circuit breaker cut off simultaneously photovoltaic and electrical loads	

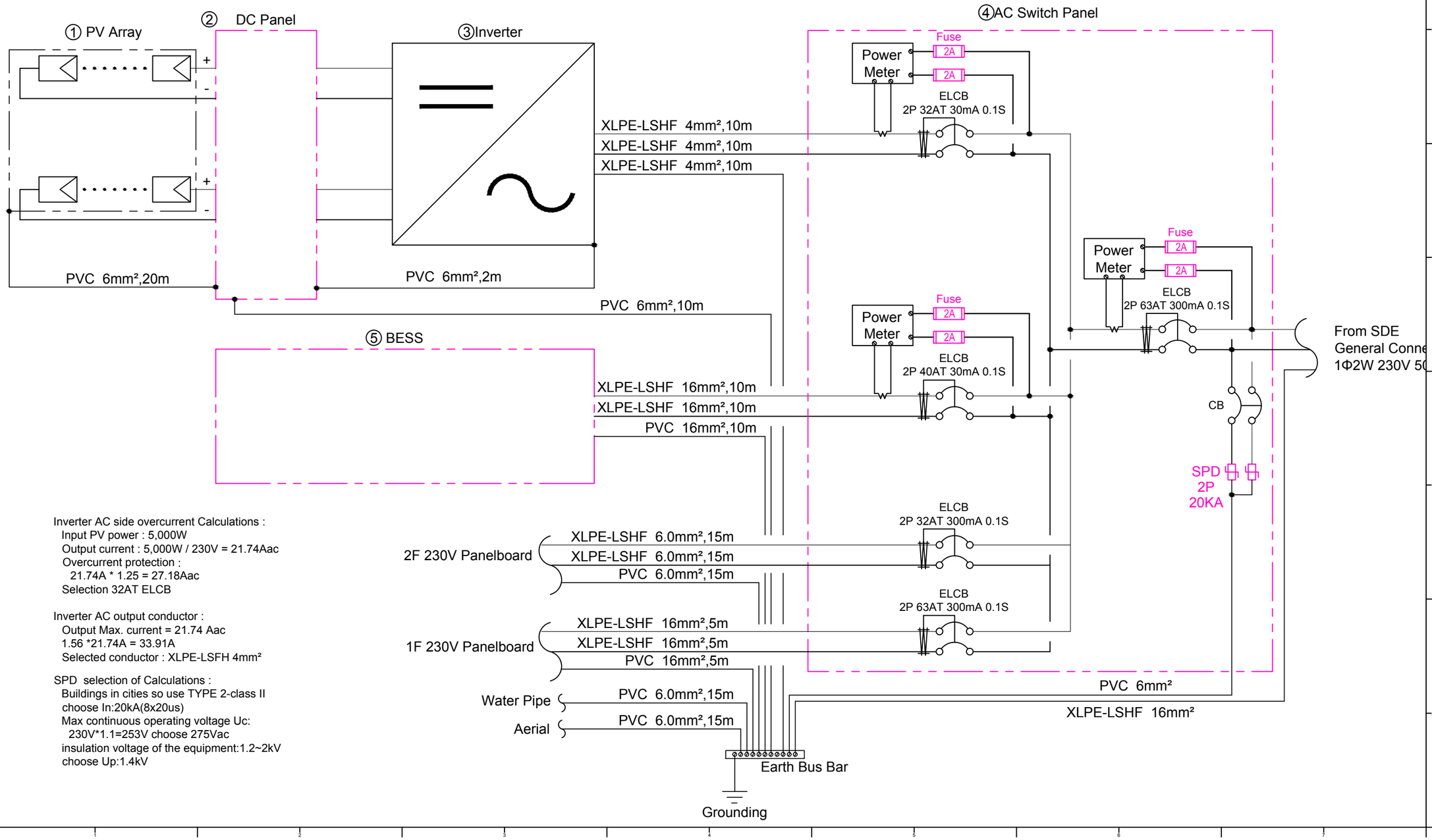

Inverter AC side overcurrent Calculations :
Input PV power : 5,000W
Output current : 5,000W / 230V = 21.74Aac
Overcurrent protection :
21.74A * 1.25 = 27.18Aac
Selection 32AT ELCB

Inverter AC output conductor :
Output Max. current = 21.74 Aac
1.56 *21.74A = 33.91A
Selected conductor : XLPE-LSFH 4mm²

SPD selection of Calculations :
Buildings in cities so use TYPE 2-class II
choose In:20kA(8x20us)
Max continuous operating voltage Uc:
230V*1.1=253V choose 275Vac
insulation voltage of the equipment:1.2~2kV
choose Up:1.4kV

Solar Decathlon Europe

Project: ORCHID HOUSE

Institution: 國立交通大學 National Chiao Tung University

NCTU Architecture 國立交通大學建築研究所

Team Name: NCTU/UNICODE
Address: 1001 Ta-Hsueh Road Hsinchu City 30010 Taiwan
Contact: www.sde.tw

Consultants:

Delta.jpg
台達電子工業股份有限公司
DELTA ELECTRONICS, INC.

Note:

Mark	Date	Description
DN	2013/04/01	SD Submission
DN	2013/07/01	DDc Submission
ST	2013/11/01	DD Submission
ST	2014/03/03	CD Submission
ST	2014/04/30	CD Submission

Drawn by	GK
Checked by	-
Scale	-
Unit	-

DWG. Title
PHOTOVOLTAIC SYSTEM: GROUNDING SYSTEM

DWG. No. PV-031

PAGE 218

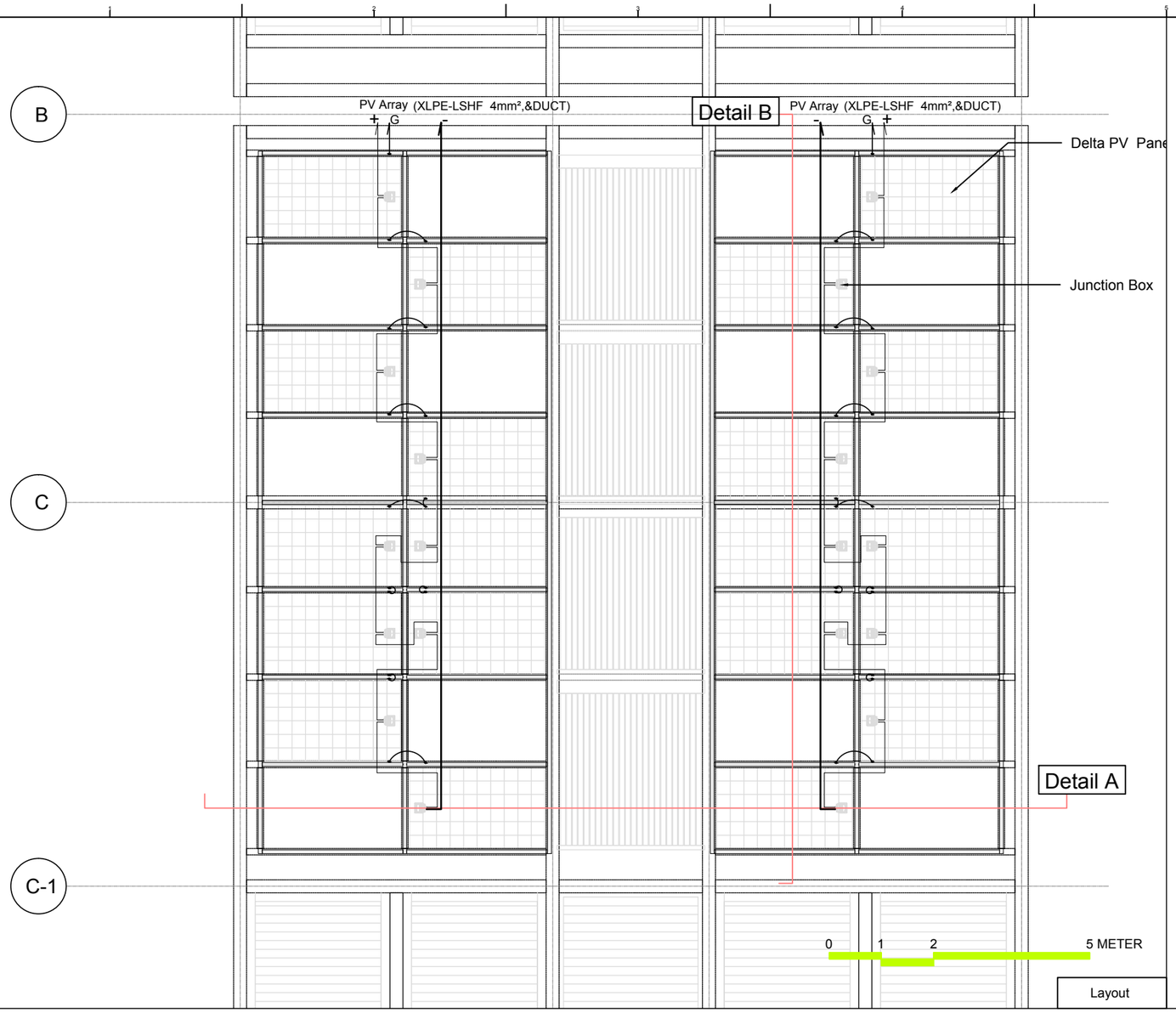

Layout

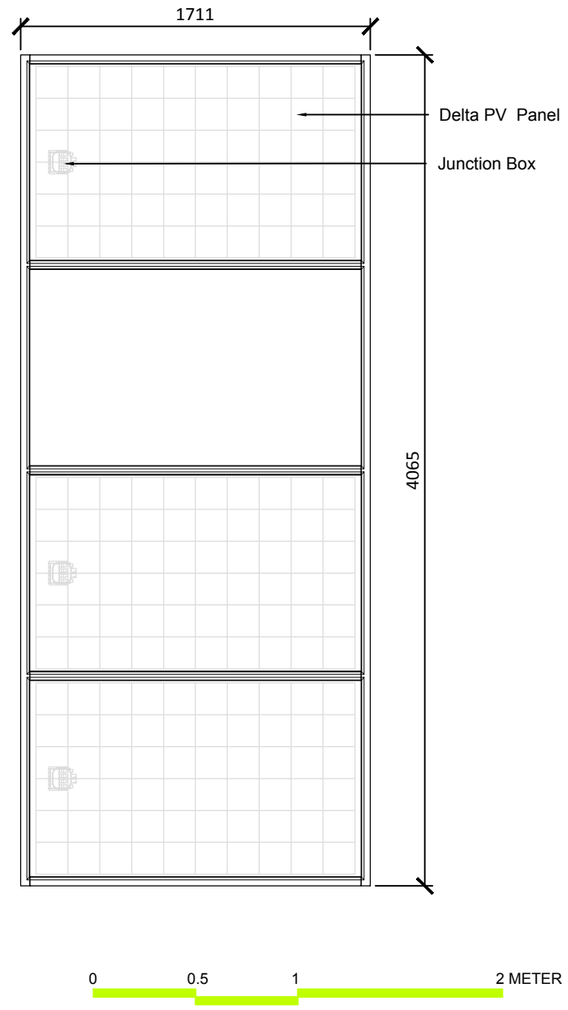

United Type

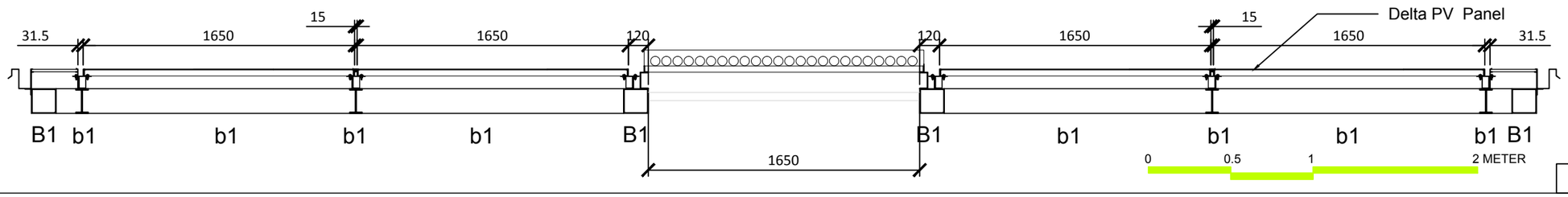

Detail A

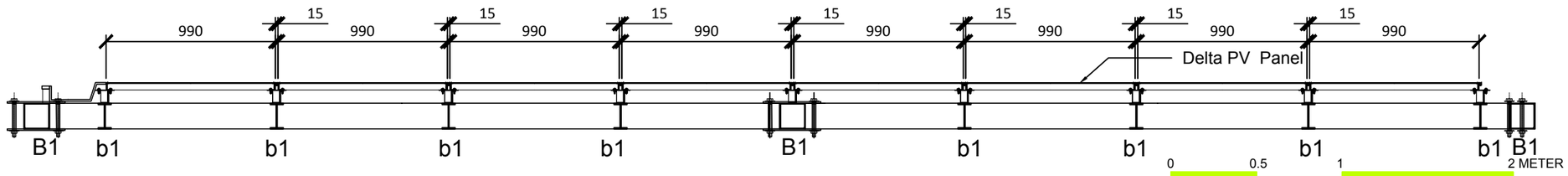

Detail B

Solar Decathlon Europe

Project: ORCHID HOUSE

Institution: 國立交通大學 National Chiao Tung University

NCTU Architecture 國立交通大學建築研究所

Team Name:	NCTU/UNICODE
Address:	1001 Ta-Hsueh Road Hsinchu City 30010 Taiwan
Contact:	www.sde.tw

Consultants: DELTA 台達電子工業股份有限公司 DELTA ELECTRONICS, INC.

Note:

Mark	Date	Description
DN	2013/04/01	SD Submission
DN	2013/07/01	DDc Submission
ST	2013/11/01	DD Submission
ST	2014/03/03	CD Submission
ST	2014/04/30	CD Submission
ST	2014/06/02	CD Submission

Drawn by	AW
Checked by	-
Scale	1:30
Unit	mm

DWG. Title: PHOTOVOLTAIC SYSTEM: MODULE LAYOUT

DWG. No. PV-041

PAGE 219

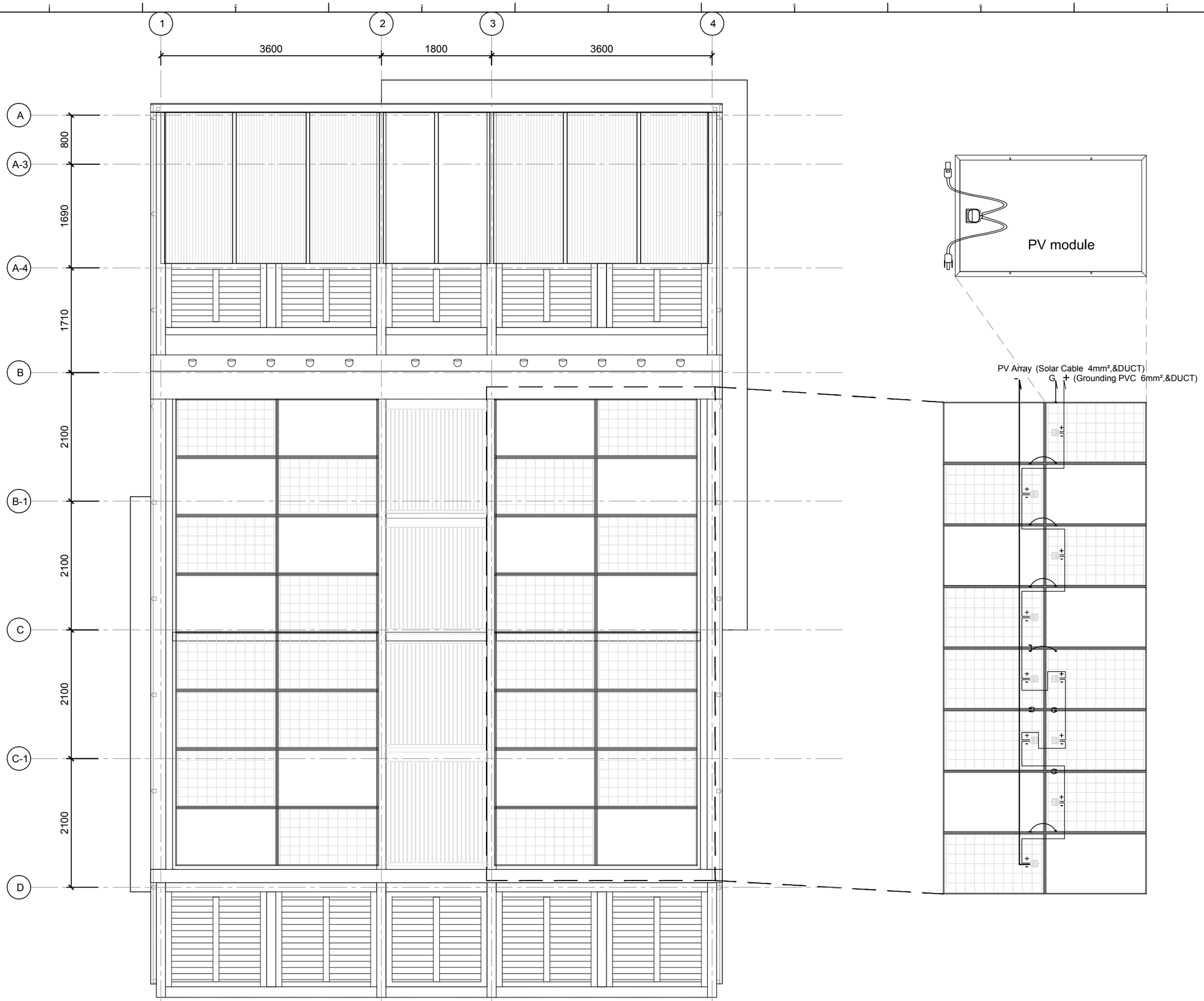

Solar Decathlon Europe

Project: ORCHID HOUSE

Institution: 國立交通大學 National Chiao Tung University

NCTU Architecture 國立交通大學建築研究所

Team Name: NCTU/UNICODE

Address: 1001 Ta-Hsueh Road
Hsinchu City 30010
Taiwan

Contact: www.sde.tw

Consultants: DELTA 台達電子工業股份有限公司 DELTA ELECTRONICS, INC.

Note:

Mark	Date	Description
DN	2013/04/01	SD Submission
DN	2013/07/01	DDc Submission
ST	2013/11/01	DD Submission
ST	2014/03/03	CD Submission
ST	2014/04/30	CD Submission
ST	2014/06/02	CD Submission

Drawn by	ST
Checked by	DN
Scale	1:60
Unit	mm

DWG. Title

PHOTOVOLTAIC SYSTEM: MODULE STRING LAYOUT

DWG. No. PV-042

PAGE 220

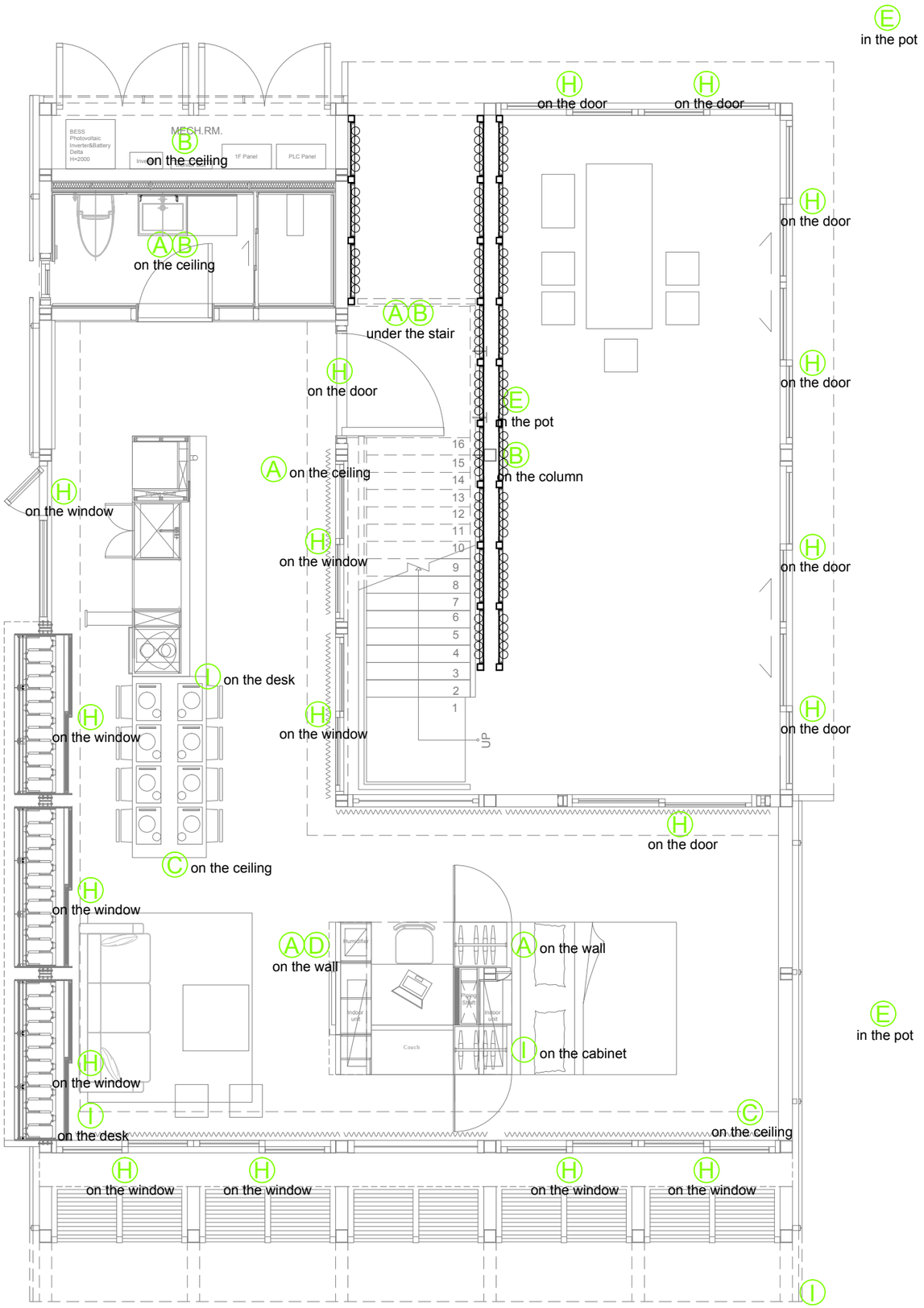

A Temperature & Humidity

B Motion detector

C Smoke Detector

D Air Quality-CO2

E Soil Moisture Sensor

F Smart Weather Station
1.Temperature & Humidity
2.Wind Speed
3.Raining
4.Air Quality-CO2
5.Solar

G Light Level Sensor

H Door / Windows Position Sensor

Solar Decathlon Europe

Project: ORCHID HOUSE

Institution: 國立交通大學 National Chiao Tung University

NCTU Architecture 國立交通大學建築研究所

Team Name: NCTU/UNICODE

Address: 1001 Ta-Hsueh Road
Hsinchu City 30010
Taiwan

Contact: www.sde.tw

Consultants: DELTA 台達電子工業股份有限公司 DELTA ELECTRONICS, INC.

Note:

Mark	Date	Description
DN	2013/04/01	SD Submission
DN	2013/07/01	DDc Submission
ST	2013/11/01	DD Submission
ST	2014/03/03	CD Submission
ST	2014/04/30	CD Submission
ST	2014/06/02	CD Submission

Drawn by	Aaron Chen
Checked by	Steven Yu
Scale	1:60
Unit	mm

DWG. Title: WIRING PLAN GROUND LEVEL

DWG. No. BAS-001

PAGE 221

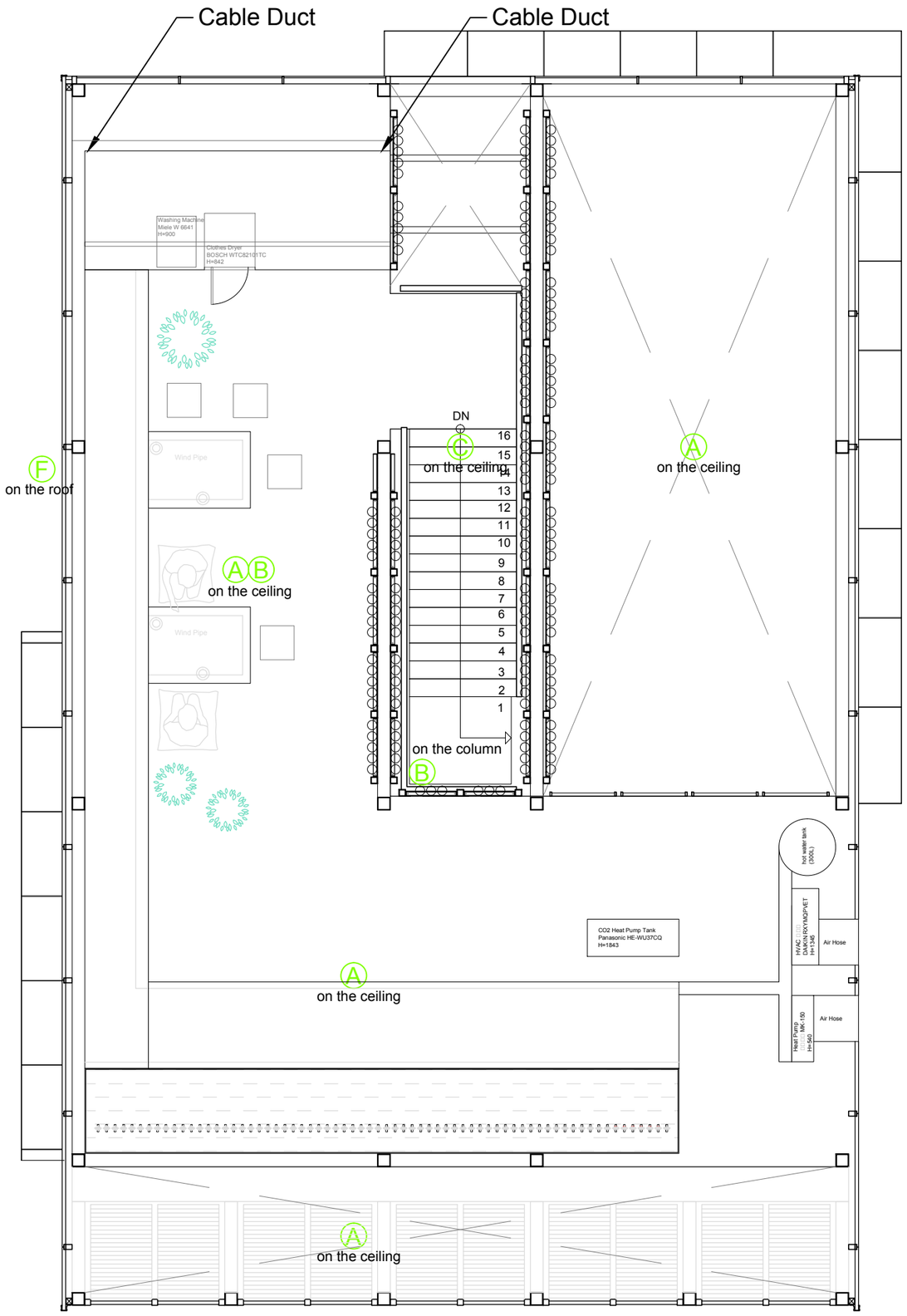

- A Temperature & Humidity
- B Motion detector
- C Smoke Detector
- D Air Quality-CO2
- E Soil Moisture Sensor
- F Smart Weather Station
  1.Temperature & Humidity
  2.Wind Speed
  3.Raining
  4.Air Quality-CO2
  5.Solar
- G Light Level Sensor
- H Door / Windows Position Sensor

Solar Decathlon Europe

Project: ORCHID HOUSE

Institution: 國立交通大學 National Chiao Tung University

NCTU Architecture 國立交通大學建築研究所

Team Name: NCTU/UNICODE
Address: 1001 Ta-Hsueh Road
Hsinchu City 30010
Taiwan
Contact: www.sde.tw

Consultants: DELTA 台達電子工業股份有限公司 DELTA ELECTRONICS, INC.

Note:

Mark	Date	Description
DN	2013/04/01	SD Submission
DN	2013/07/01	DDc Submission
ST	2013/11/01	DD Submission
ST	2014/03/03	CD Submission
ST	2014/04/30	CD Submission
ST	2014/06/02	CD Submission

Drawn by	Aaron Chen
Checked by	Steven Yu
Scale	1:60
Unit	mm

DWG. Title

WIRING PLAN
MEZZANINE LEVEL

DWG. No. BAS-002

PAGE 222

Home Automation System

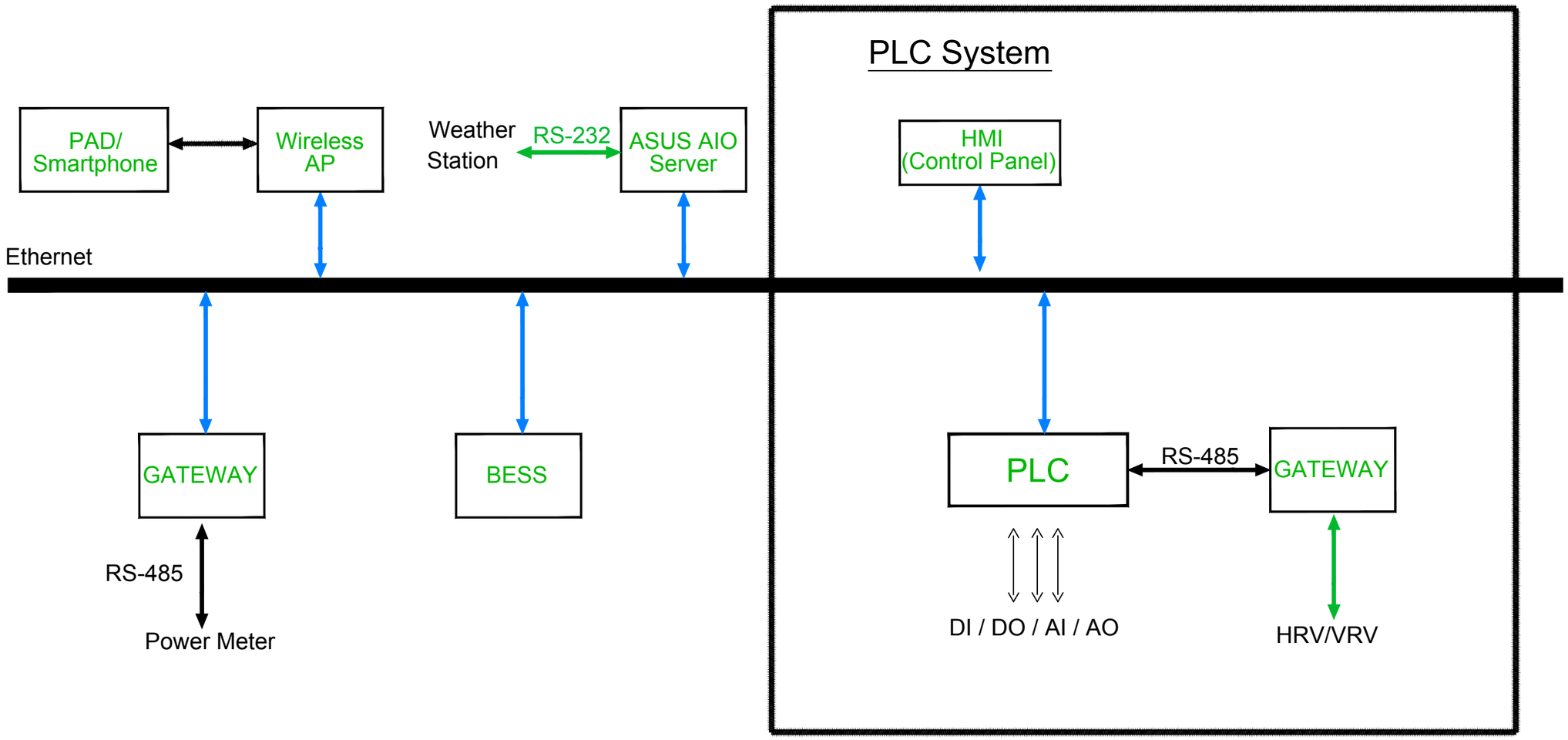

Solar Decathlon Europe

Project: ORCHID HOUSE

Institution: 國立交通大學 National Chiao Tung University

NCTU Architecture 國立交通大學建築研究所

Team Name: NCTU/UNICODE

Address: 1001 Ta-Hsueh Road Hsinchu City 30010 Taiwan

Contact: www.sde.tw

Consultants: DELTA 台達電子工業股份有限公司 DELTA ELECTRONICS, INC.

Note:

Mark	Date	Description
DN	2013/04/01	SD Submission
DN	2013/07/01	DDc Submission
ST	2013/11/01	DD Submission
ST	2014/03/03	CD Submission
ST	2014/04/30	CD Submission
ST	2014/06/02	CD Submission

Drawn by: Aaron Chen

Checked by: Steven Yu

Scale: -

Unit: -

DWG. Title: SCHEMATIC DIAGRAM 1

DWG. No.: BAS-101

PAGE: 223

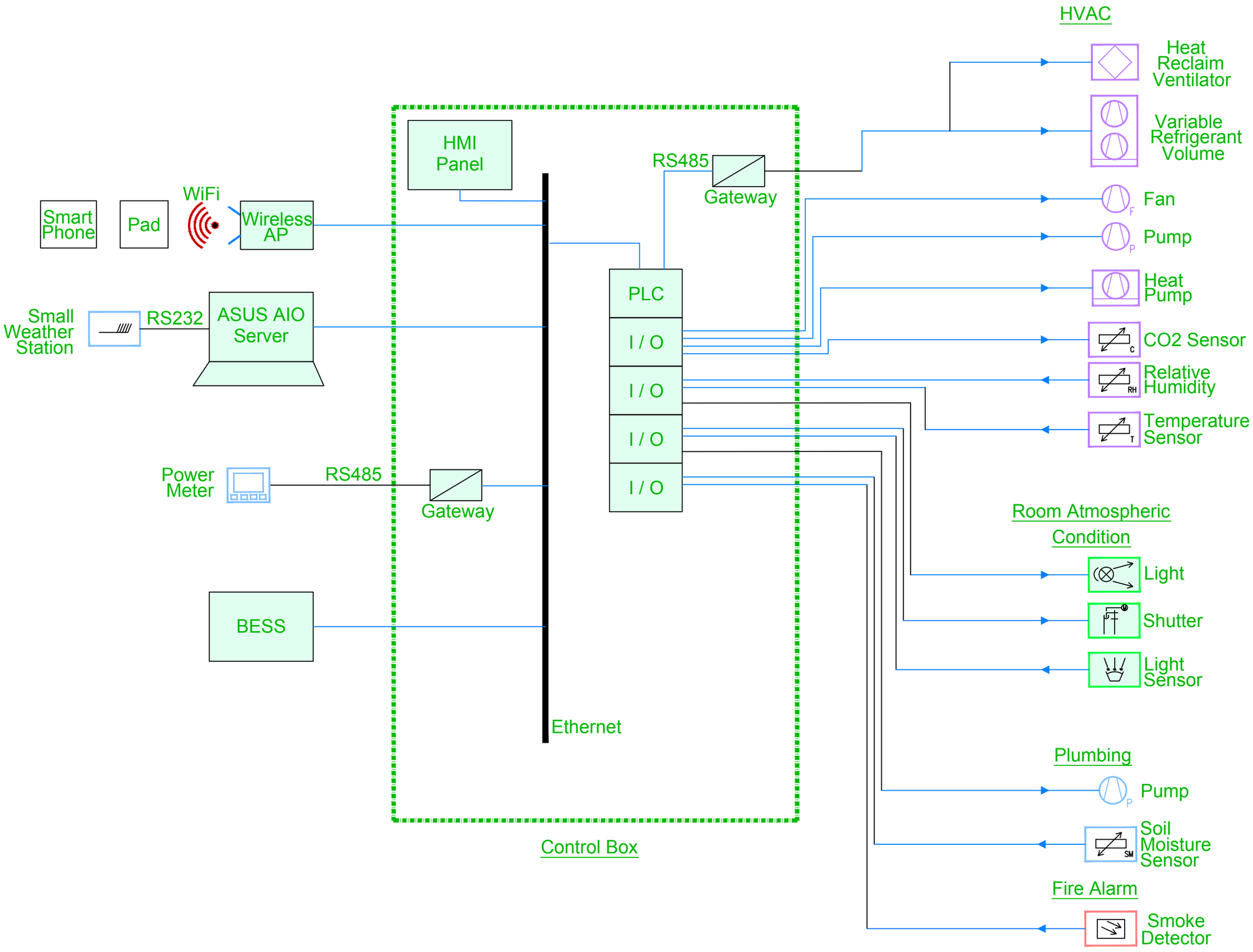

Solar Decathlon Europe

Project: ORCHID HOUSE

Institution: 國立交通大學 National Chiao Tung University

NCTU Architecture 國立交通大學建築研究所

Team Name: NCTU/UNICODE

Address: 1001 Ta-Hsueh Road Hsinchu City 30010 Taiwan

Contact: www.sde.tw

Consultants: DELTA 台達電子工業股份有限公司 DELTA ELECTRONICS, INC.

Note:

Mark	Date	Description
DN	2013/04/01	SD Submission
DN	2013/07/01	DDc Submission
ST	2013/11/01	DD Submission
ST	2014/03/03	CD Submission
ST	2014/04/30	CD Submission
ST	2014/06/02	CD Submission

Drawn by: Aaron Chen

Checked by: Steven Yu

Scale: -

Unit: -

DWG. Title: SCHEMATIC DIAGRAM 2

DWG. No.: BAS-102

PAGE: 224

Legend / Brand / Model

Item	Specification	Brand/Model
Temperature & Humidity	T : -50~50□ or 0~100□ H : 0~100%RH	Airtek / AR1000
Air Quality (CO2)	±30 ppm ±2% of Reading	Airtek / VC1008T
Smoke Detector	Action concentration : 15% Alarm : 90db / 1m	Horing Lih / NQ95
Soil Moisture Sensor	0-100% ; ±3%(m3/m3)	Jetec / JSH-100
Smart Weather Station	T/H ; Rainfall ; Wind ; BP	Vaisala WXT520
Light Level Sensor	0-400 lux	Schneider / SLR320
Motion Detector	Infrared /	Panasonic / WTKF2311
Access Point		
Touch Panel	Android 4.2 ; DDR3 1G ; Wifi	Asus / Nexus 7

Solar Decathlon Europe

Project:

ORCHID HOUSE

Institution:

國立交通大學 National Chiao Tung University

NCTU Architecture 國立交通大學建築研究所

Team Name: NCTU/UNICODE

Address: 1001 Ta-Hsueh Road
Hsinchu City 30010
Taiwan

Contact: www.sde.tw

Consultants:

DELTA 台達電子工業股份有限公司 DELTA ELECTRONICS, INC.

Note:

Mark	Date	Description
DN	2013/04/01	SD Submission
DN	2013/07/01	DDc Submission
ST	2013/11/01	DD Submission
ST	2014/03/03	CD Submission
ST	2014/04/30	CD Submission
ST	2014/06/02	CD Submission

Drawn by: AC

Checked by: SY

Scale: -

Unit: -

DWG. Title: EQUIPMENT

DWG. No.: BAS-201

PAGE: 225

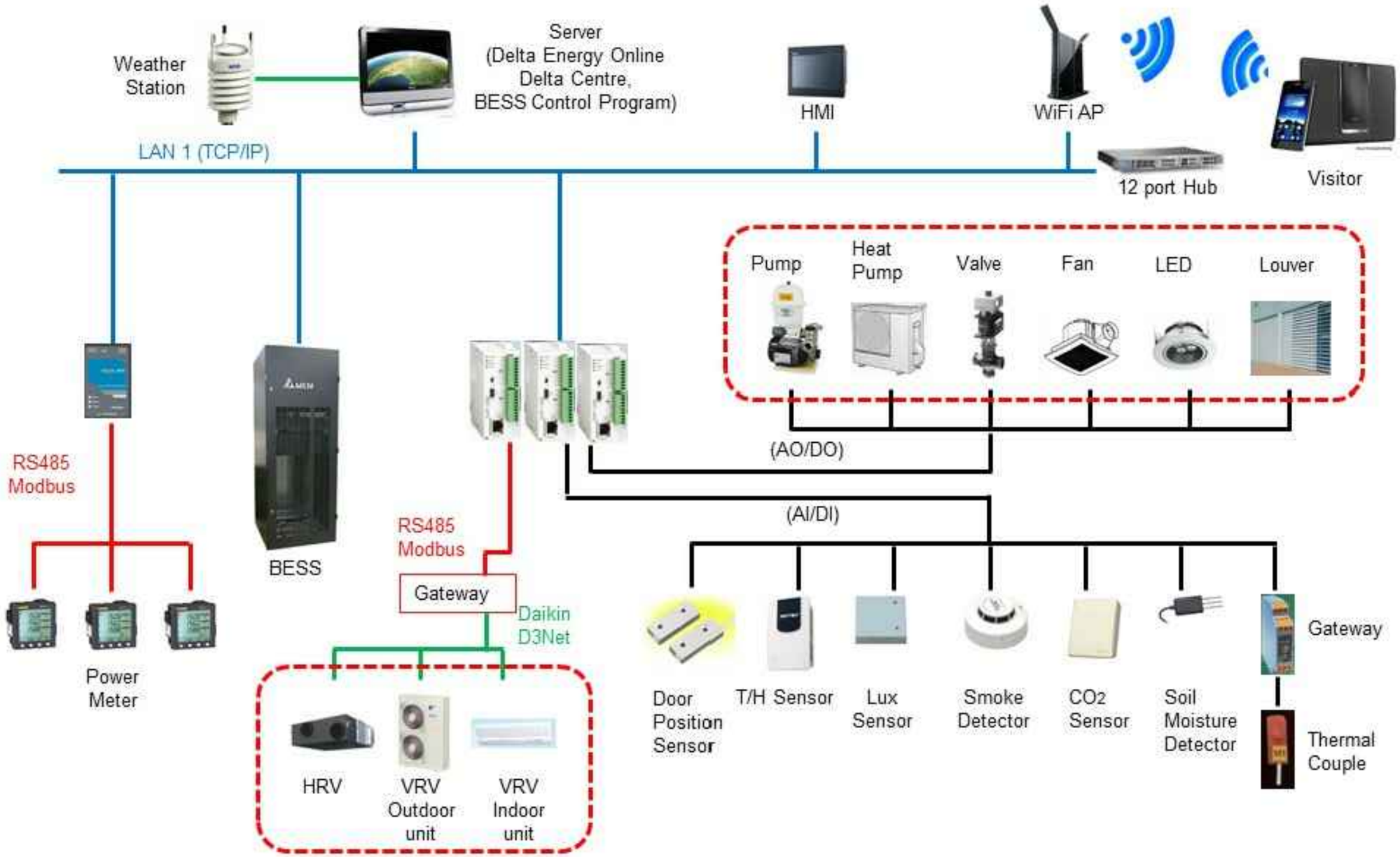

Solar Decathlon Europe

Project: ORCHID HOUSE

Institution: 國立交通大學 National Chiao Tung University

NCTU Architecture 國立交通大學建築研究所

Team Name: NCTU/UNICODE

Address: 1001 Ta-Hsueh Road Hsinchu City 30010 Taiwan

Contact: www.sde.tw

Consultants: uis United Integrated Services

Note:

Mark	Date	Description
DN	2013/04/01	SD Submission
DN	2013/07/01	DDc Submission
ST	2013/11/01	DD Submission
ST	2014/03/03	CD Submission
ST	2014/04/30	CD Submission
ST	2014/06/02	CD Submission

Drawn by	AC
Checked by	SY
Scale	-
Unit	-

DWG. Title: EQUIPMENT

DWG. No.: BAS-202

PAGE: 226

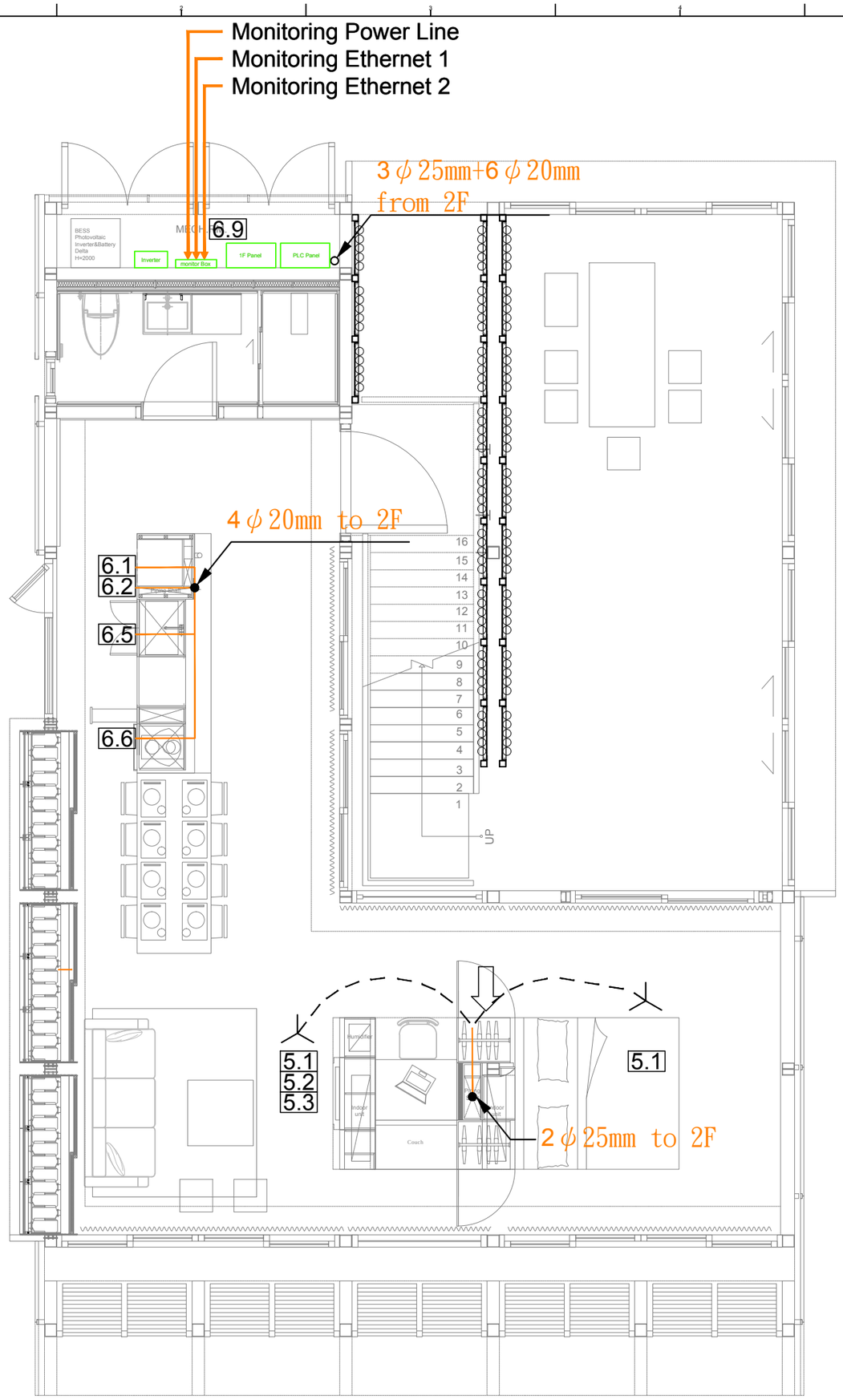

Legend / Channeling / Lenght		
5.1 5.2 5.3	Temperature Humidity Air Quality	21m
5.1	Temperature	28m
6.1	Fridge	15m
6.2	Freezer	15m
6.5	Dish Washer	17m
6.6	Oven	19m
6.9	Home Electronics	
⇨	Temporal Tripod Location	
monitor Box	Monitor Box	
-----	Sensor Channeling	
⊥	Tripod	

Solar Decathlon Europe

Project: ORCHID HOUSE

Institution: 國立交通大學 National Chiao Tung University

NCTU Architecture 國立交通大學建築研究所

Team Name: NCTU/UNICODE
Address: 1001 Ta-Hsueh Road Hsinchu City 30010 Taiwan
Contact: www.sde.tw

Consultants: DELTA 台達電子工業股份有限公司 DELTA ELECTRONICS, INC.

Note:

Mark	Date	Description
DN	2013/04/01	SD Submission
DN	2013/07/01	DDc Submission
ST	2013/11/01	DD Submission
ST	2014/03/03	CD Submission
ST	2014/04/30	CD Submission
ST	2014/06/02	CD Submission

Drawn by	Aaron Chen
Checked by	Steven Yu
Scale	1:60
Unit	mm

DWG. Title: GENERAL MONITORING GROUND LEVEL

DWG. No. ID-001-1

PAGE 227

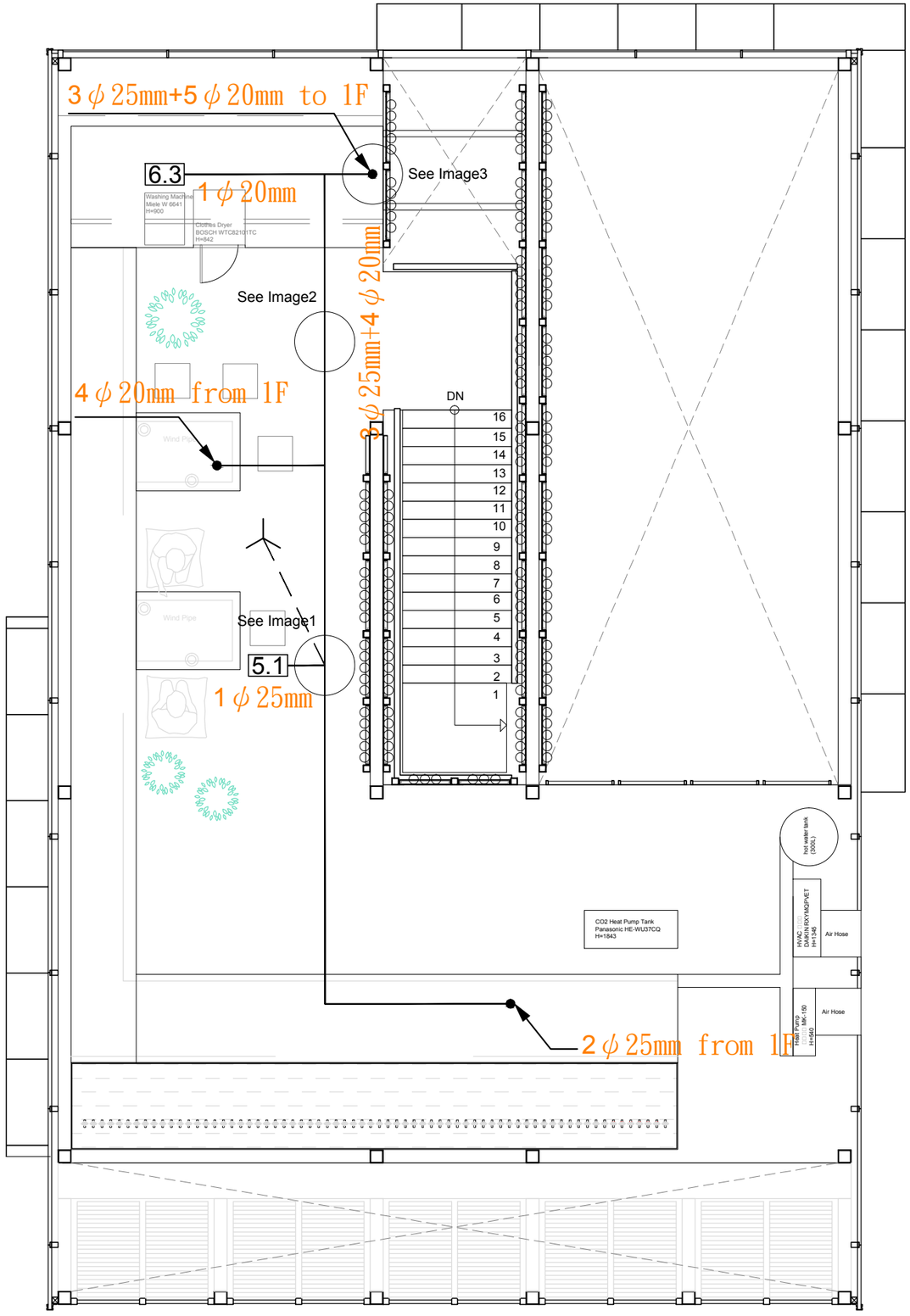

Legend / Channeling / Lenght		
5.1	Temperature	15m
6.3	Clothes Washing	10m
	Tripod	

Image1

Image2

Image3

Solar Decathlon Europe

Project: ORCHID HOUSE

Institution: 國立交通大學 National Chiao Tung University

NCTU Architecture 國立交通大學建築研究所

Team Name: NCTU/UNICODE

Address: 1001 Ta-Hsueh Road Hsinchu City 30010 Taiwan

Contact: www.sde.tw

Consultants: DELTA 台達電子工業股份有限公司 DELTA ELECTRONICS, INC.

Note:

Mark	Date	Description
DN	2013/04/01	SD Submission
DN	2013/07/01	DDc Submission
ST	2013/11/01	DD Submission
ST	2014/03/03	CD Submission
ST	2014/04/30	CD Submission
ST	2014/06/02	CD Submission

Drawn by	Aaron Chen
Checked by	Steven Yu
Scale	1:60
Unit	mm

DWG. Title: GENERAL MONITORING MEZZANINE LEVEL

DWG. No. ID-001-2

PAGE 228

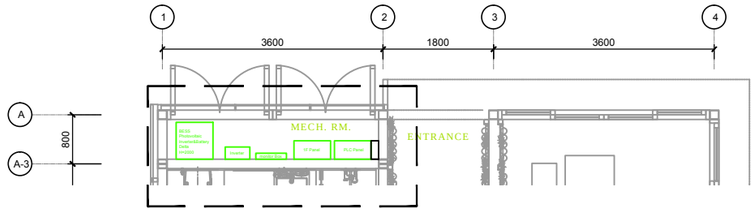

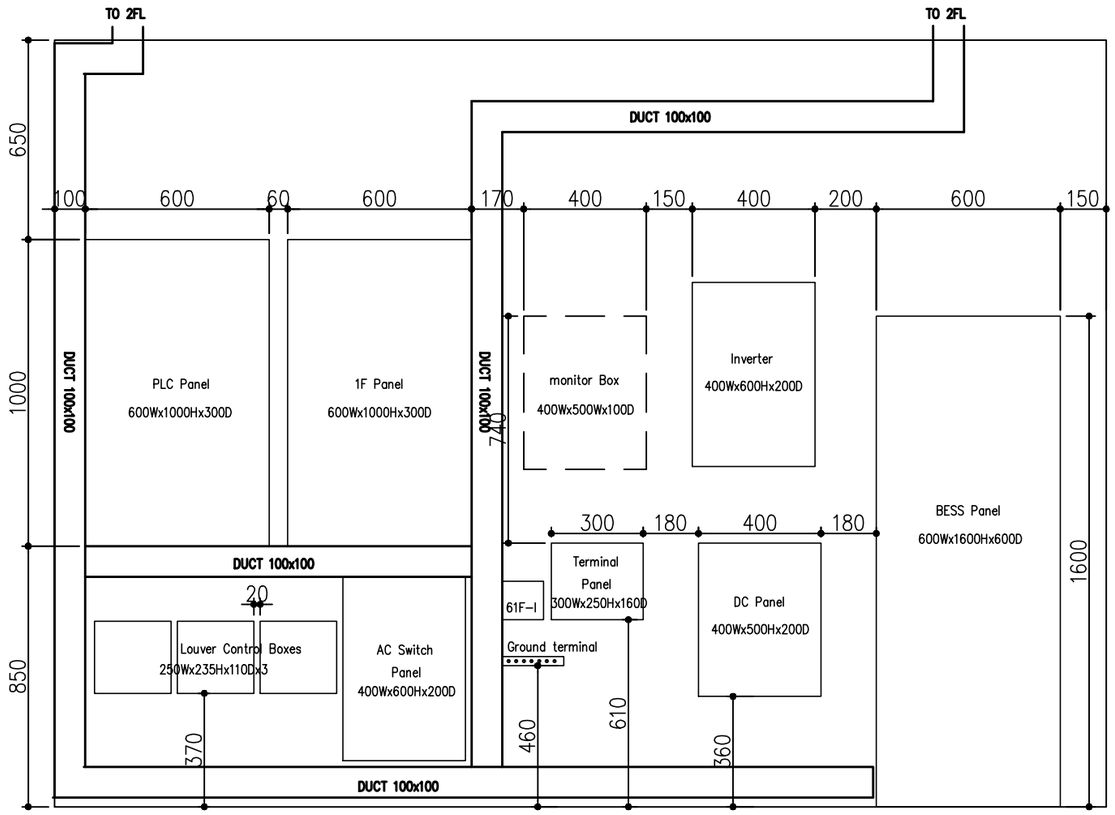

FRONT VIEW

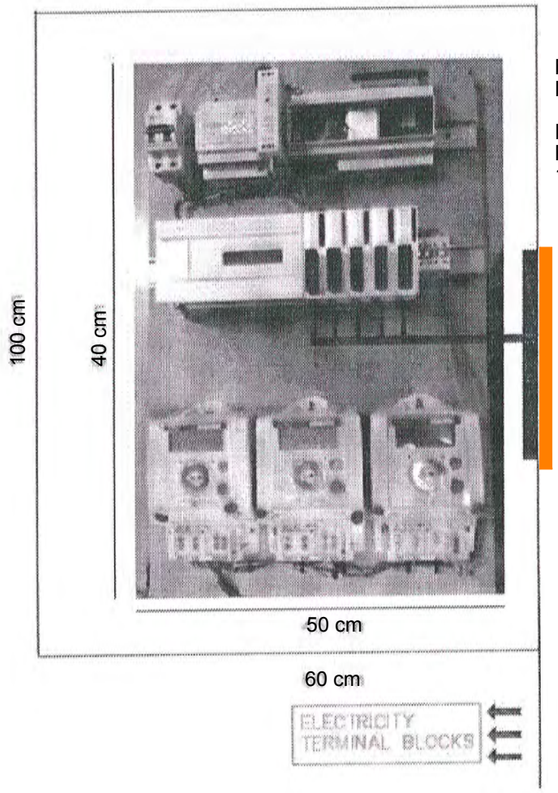

Monitoring Panel
Dimensions : 50x40x15 cm

Free Space Left For The
Monitoring Panel "
100x60x20 cm

5.1 Living Room
5.2 Living Room
5.3 Living Room
5.1 Bed Room
5.1 Kitchen Room
6.1 Fridge
6.2 Freezer
6.3 Clothes Washer
6.5 Dish Washer
6.6 Oven

Sensor Entrance

Monitoring Power Line
Monitoring Ethernet 1
Monitoring Ethernet 2

Solar Decathlon Europe

Project: ORCHID HOUSE

Institution: 國立交通大學 National Chiao Tung University

NCTU Architecture 國立交通大學建築研究所

Team Name: NCTU/UNICODE
Address: 1001 Ta-Hsueh Road
Hsinchu City 30010
Taiwan
Contact: www.sde.tw

Consultants: DELTA 台達電子工業股份有限公司 DELTA ELECTRONICS, INC.

Note:

Mark	Date	Description
DN	2013/04/01	SD Submission
DN	2013/07/01	DDc Submission
ST	2013/11/01	DD Submission
ST	2014/03/03	CD Submission
ST	2014/04/30	CD Submission
ST	2014/06/02	CD Submission

Drawn by	AC
Checked by	SY
Scale	-
Unit	

DWG. Title: MONITORING PANEL ROOM

DWG. No. ID-002

PAGE 229

Tag	Components	Manufacturer	Model	Q'ty	Notes
①	PV Module	NSP	D6P250B3A	20	
②	DC Protections			1	
③	Inverter	Delta	Solivia 5.0	1	
④	Box			1	
	Power Meter	Archmeter	PA33	3	
	ELCB	Schneider		5	
	Surge Protection Device	Shihlin	BHP40, 2P	1	Uc:275V,Up□1.4kV,In:20kA(8/20us)
⑤	BESS	Delta	RenE-ES 6120	1	Battery Energy Storage System

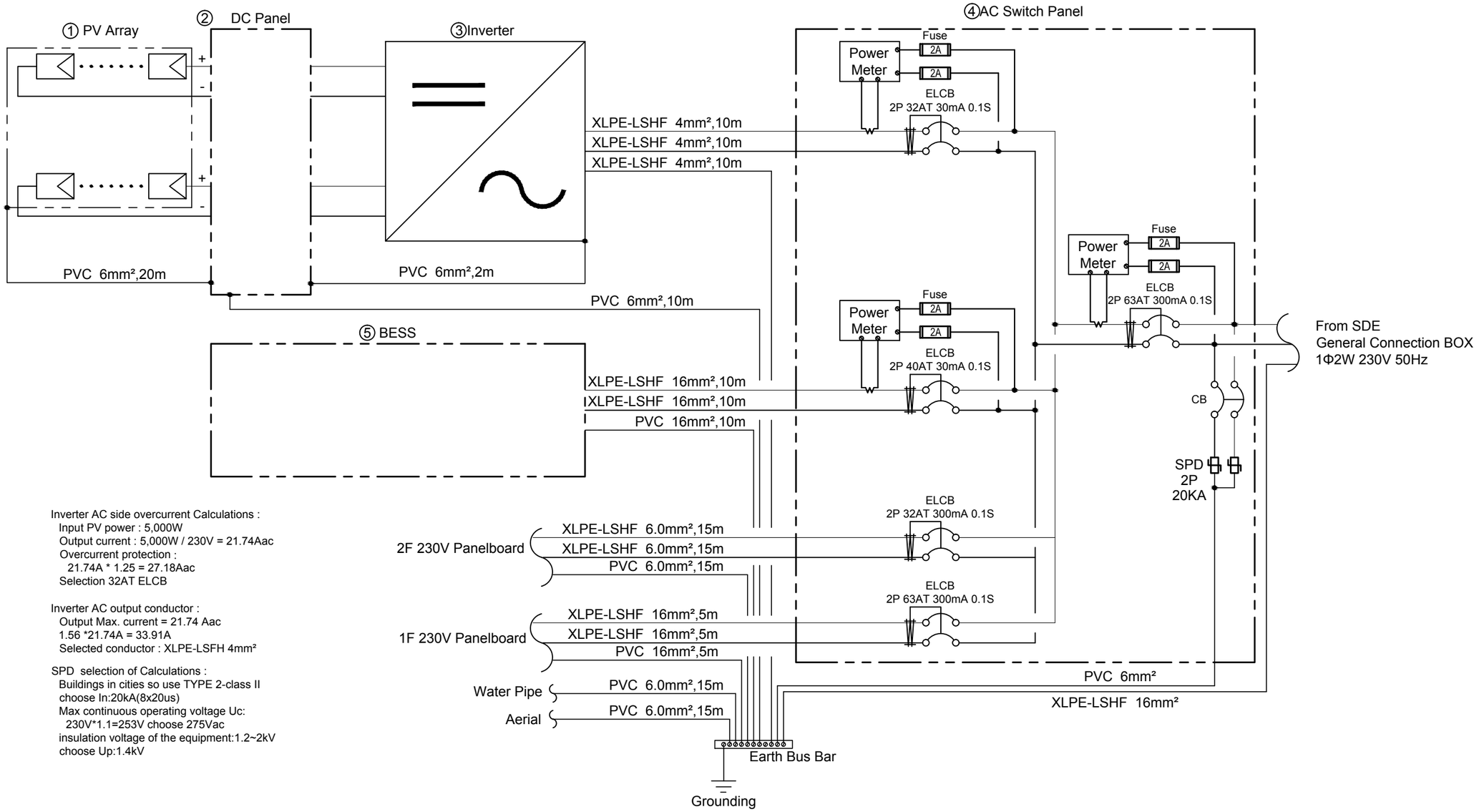

Inverter AC side overcurrent Calculations :
Input PV power : 5,000W
Output current : 5,000W / 230V = 21.74Aac
Overcurrent protection :
21.74A * 1.25 = 27.18Aac
Selection 32AT ELCB

Inverter AC output conductor :
Output Max. current = 21.74 Aac
1.56 *21.74A = 33.91A
Selected conductor : XLPE-LSFH 4mm²

SPD selection of Calculations :
Buildings in cities so use TYPE 2-class II
choose In:20kA(8x20us)
Max continuous operating voltage Uc:
230V*1.1=253V choose 275Vac
insulation voltage of the equipment:1.2~2kV
choose Up:1.4kV

Solar Decathlon Europe

Project: ORCHID HOUSE

Institution: 國立交通大學 National Chiao Tung University

NCTU Architecture 國立交通大學建築研究所

Team Name: NCTU/UNICODE
Address: 1001 Ta-Hsueh Road Hsinchu City 30010 Taiwan
Contact: www.sde.tw

Consultants: DELTA 台達電子工業股份有限公司 DELTA ELECTRONICS, INC.

Note:

Mark	Date	Description
DN	2013/04/01	SD Submission
DN	2013/07/01	DDc Submission
ST	2013/11/01	DD Submission
ST	2014/03/03	CD Submission
ST	2014/04/30	CD Submission
ST	2014/06/02	CD Submission

Drawn by	Aaron Chen
Checked by	Steven Yu
Scale	1:60
Unit	mm

DWG. Title: ELECTRICITY METERS TOPOLOGY 1

DWG. No. ID-003-1

PAGE 230

Tag	Components	Manufacturer	Model	Q'ty	Notes
①	SDE Grid			1	Organizer Supplied Meter
②	Smart Meter	Schneider	PM3200	1	
③	PV array	DelSolar	D6P250B3A	24	
④	DC Protections	HI BOX		1	
⑤	Inverter	Delta	Solivia 5.0	1	
⑥	Power Meter	Schneider	PM3200	2	
⑦	BESS	Delta		1	Battery Energy Storage System

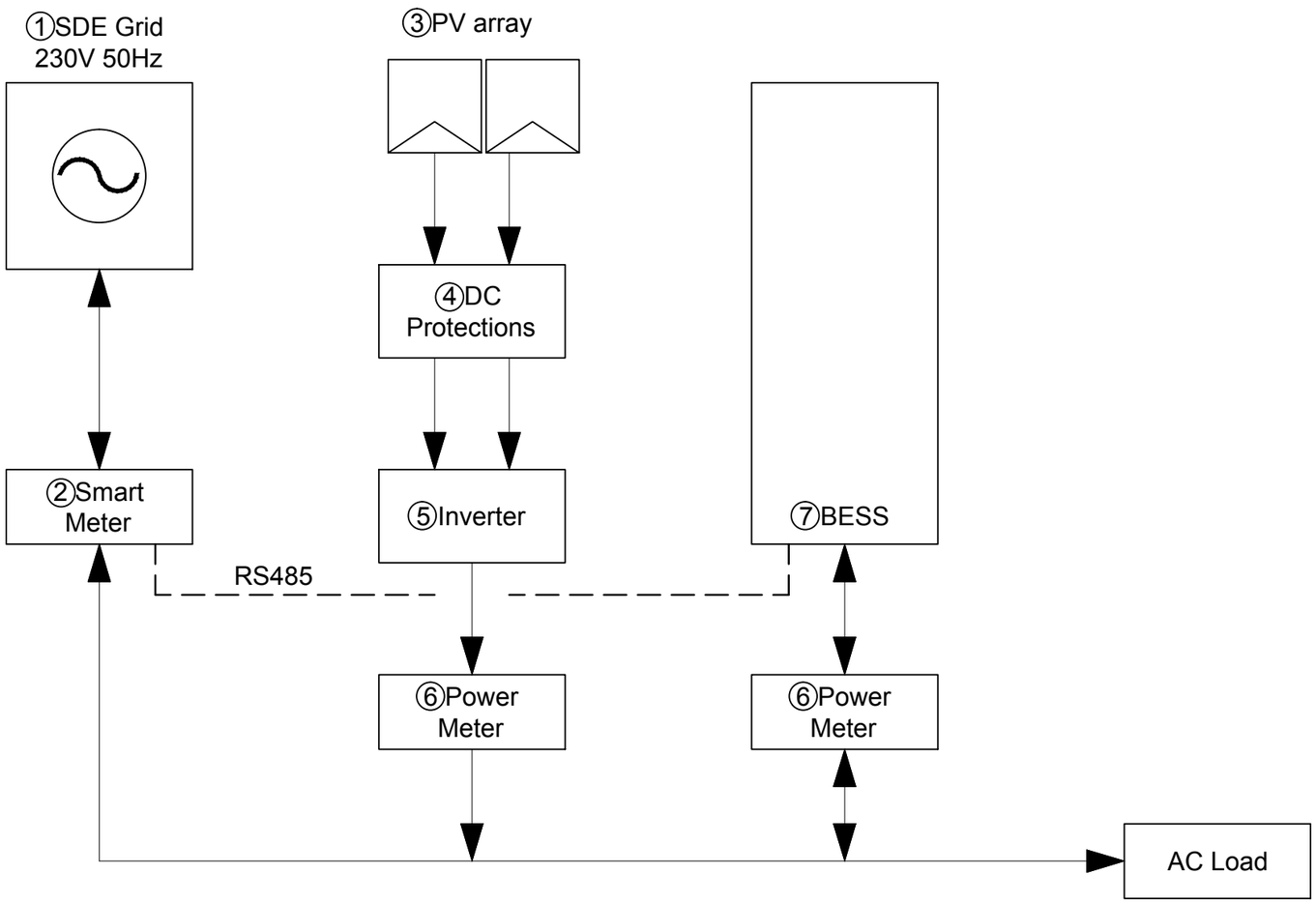

Solar Decathlon Europe

Project: ORCHID HOUSE

Institution: 國立交通大學 National Chiao Tung University

NCTU Architecture 國立交通大學建築研究所

Team Name: NCTU/UNICODE

Address: 1001 Ta-Hsueh Road
Hsinchu City 30010
Taiwan

Contact: www.sde.tw

Consultants: DELTA 台達電子工業股份有限公司 DELTA ELECTRONICS, INC.

Note:

Mark	Date	Description
DN	2013/04/01	SD Submission
DN	2013/07/01	DDc Submission
ST	2013/11/01	DD Submission
ST	2014/03/03	CD Submission
ST	2014/04/30	CD Submission
ST	2014/06/02	CD Submission

Drawn by	GK
Checked by	DN
Scale	-
Unit	-

DWG. Title: ELECTRICITY METERS TOPOLOGY 2

DWG. No. ID-003-2

PAGE 231

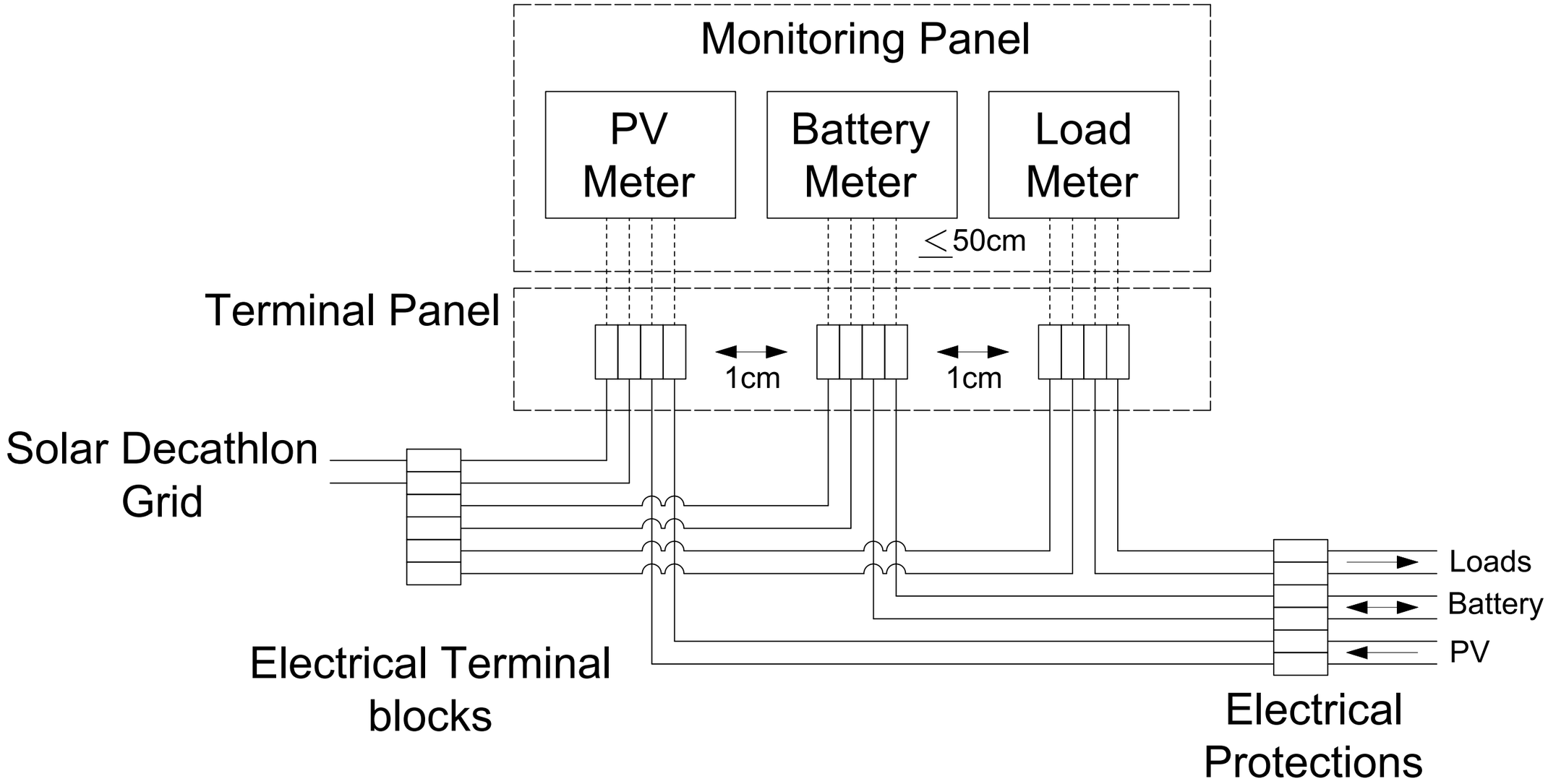

Solar Decathlon Europe

Project: ORCHID HOUSE

Institution: 國立交通大學 National Chiao Tung University

NCTU Architecture 國立交通大學建築研究所

Team Name: NCTU/UNICODE

Address: 1001 Ta-Hsueh Road
Hsinchu City 30010
Taiwan

Contact: www.sde.tw

Consultants: DELTA 台達電子工業股份有限公司 DELTA ELECTRONICS, INC.

Note:

Mark	Date	Description
DN	2013/04/01	SD Submission
DN	2013/07/01	DDc Submission
ST	2013/11/01	DD Submission
ST	2014/03/03	CD Submission
ST	2014/04/30	CD Submission
ST	2014/06/02	CD Submission

Drawn by	GK
Checked by	DN
Scale	-
Unit	-

DWG. Title: ELECTRICITY METERS CONNECTION

DWG. No. ID-004

PAGE 232

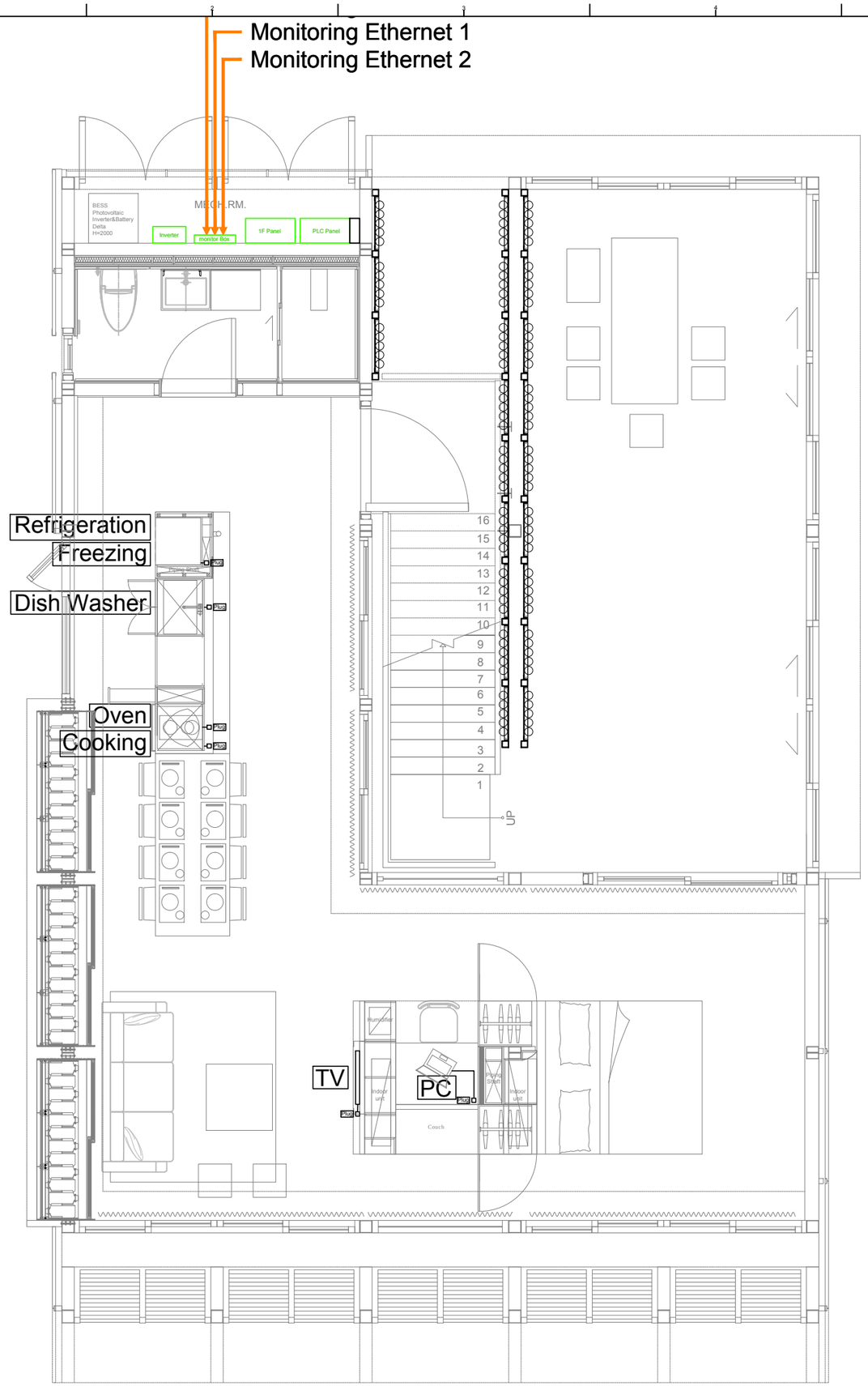

Legend / Brand / Model		
Refrigeration	MIELE	KFN 37452 i DE
Dish Washer	MIELE	G6995 SCVi K2O
Oven	MIELE	H2161 B CLST
TV	Samsung	F4000 Series 4
PC	Asus	Transformer AiO P1801

Solar Decathlon Europe

Project: ORCHID HOUSE

Institution: 國立交通大學 National Chiao Tung University

NCTU Architecture 國立交通大學建築研究所

Team Name: NCTU/UNICODE

Address: 1001 Ta-Hsueh Road
Hsinchu City 30010
Taiwan

Contact: www.sde.tw

Consultants: uis United Integrated Services

Note:

N

Mark	Date	Description
DN	2013/04/01	SD Submission
DN	2013/07/01	DDc Submission
ST	2013/11/01	DD Submission
ST	2014/03/03	CD Submission
ST	2014/04/30	CD Submission
ST	2014/06/02	CD Submission

Drawn by	AC
Checked by	SY
Scale	-
Unit	-

DWG. Title

HOUSE APPLIANCES
GROUND LEVEL

DWG. No. ID-005-1

PAGE 233

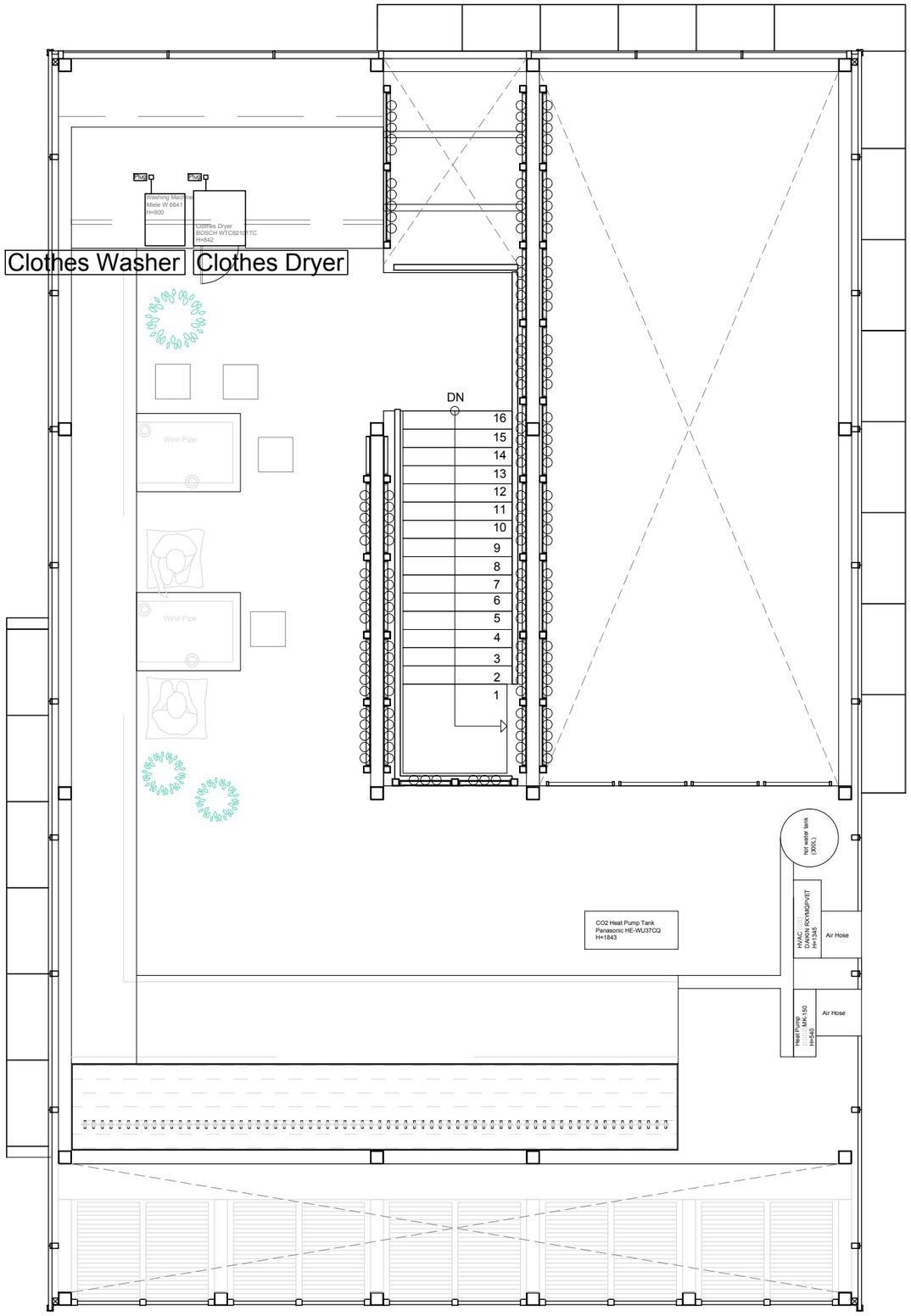

Legend / Brand / Model		
Clothes Washer	MIELE	W 664
Clothes Dryer	BOSCH	WTW84363NL

Solar Decathlon Europe

Project: ORCHID HOUSE

Institution: 國立交通大學 National Chiao Tung University

NCTU Architecture 國立交通大學建築研究所

Team Name: NCTU/UNICODE

Address: 1001 Ta-Hsueh Road
Hsinchu City 30010
Taiwan

Contact: www.sde.tw

Consultants: uis United Integrated Services

Note:

Mark	Date	Description
DN	2013/04/01	SD Submission
DN	2013/07/01	DDc Submission
ST	2013/11/01	DD Submission
ST	2014/03/03	CD Submission
ST	2014/04/30	CD Submission
ST	2014/06/02	CD Submission

Drawn by	AC
Checked by	SY
Scale	1:60
Unit	mm

DWG. Title

HOUSE APPLIANCES
MEZZANINE LEVEL

DWG. No. ID-005-2

PAGE 234

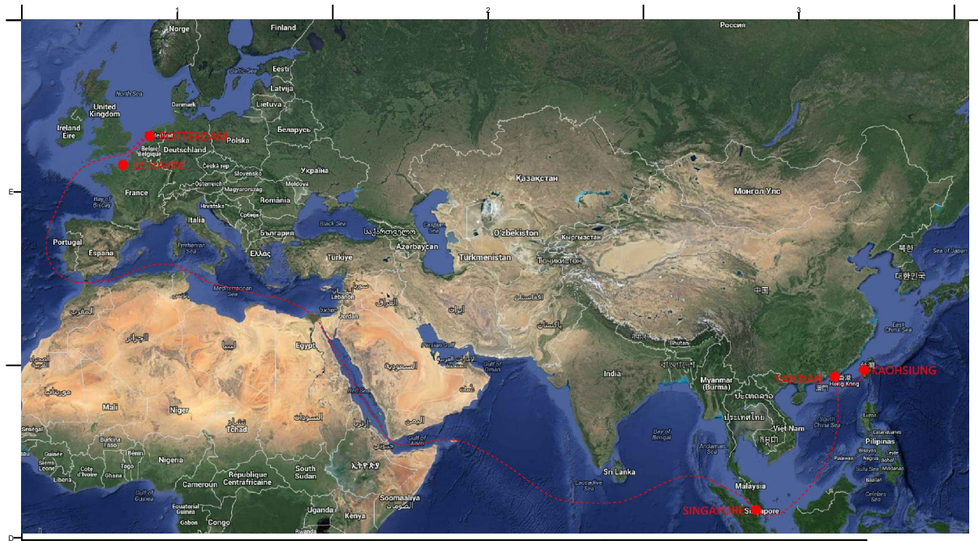

Phase	Port	Arrival	Departure
1	KAOHSIUNG	2014/4/29 10:00	2014/4/30 08:00
2	YANTIAN	2014/5/1 08:00	2014/5/2 08:00
3	SINGAPORE	2014/5/5 16:00	2014/5/6 22:00
4	ROTTERDAM	2014/5/26 01:00	2014/5/27 10:00
5	LE HAVRE	2014/6/1 06:00	2014/6/2 06:00

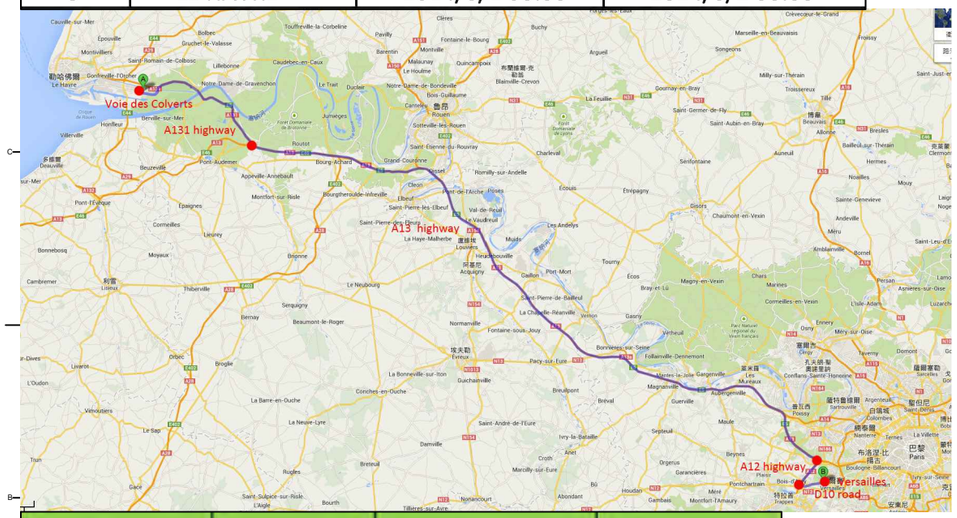

Trailer Frequency	Transport Date	Location & Directions	Travel time(min)
15	6/16-6/25	Voie des Colverts(start)	0
		A131 Highway	7
		A13 Highway	16
		A12 Highway	60
		D10 Road	26
		Versailles(end)	5
TOTAL			114
16	7/15-7/19	Versailles(start)	0
		D10 Road	5
		A12 Highway	26
		A13 Highway	60
		A131 Highway	16
		Voie des Colverts(end)	7
TOTAL			114

Shipping, Freight, Demand, Process Timetable				
Date	Local	Project target	Demand Help	Self assist
4/16~4/29	Taiwan	Apply to customs	Declaration process guidance	Customs detail, customs declaration
4/7~4/13	Taiwan	Component packaging and protection	Packaging and protective materials to provide	Packaging and Protection
4/13~4/16	Taiwan	Component transport (Container *14)	Hsinchu→Container port	
4/13~4/16	Taiwan	Component Loading(Container*14)	Loading location and Equipment evaluation	Component classification
4/29~6/1	Ship	Taiwan→France	Transport	The number of containers and the declaration content
6/1~6/5	France	Immigration Customs	Declaration process guidance	Customs detail, the number of containers and the
6/5~6/10	France	Component Discharge (Container*14)(Trailers Trucks *15)	Component Discharge	Component Discharge
6/10~6/15	France	Component transport (Trailers Trucks *15)	France transport (Trailers Trucks *13)	Trucks size
6/5~6/25 7/15~7/25	France	Pre Construction Warehouse (H-5M,400m^2 Warehouse) Heavy equipment rental	Warehouse Lodging Near Warehouse Forklift ,Bridge Crane or small crane ,Scaffolding, air Compressors	Warehouse size
6/16~6/25	France	Transport sequence	Transport	Transport sequence in 10 Days
7/15~7/24	France	Disassembly Warehouse (H-5M,400m^2 Warehouse)	Forklift, Bridge crane or small crane ,Scaffolding, air Compressors	
7/19~7/24	France	Component packaging and protection	Packaging and protective materials to provide	Packaging and Protection
7/21~7/24	France	Component transport (Trailers Trucks *14)	Warehouse→Port	
7/25	France	Outbound Customs	Declaration process guidance	Customs detail, customs declaration
8/1	Taiwan	Transportation back to Taiwan		

Solar Decathlon Europe

Project: ORCHID HOUSE

Institution: 國立交通大學 National Chiao Tung University

NCTU Architecture 國立交通大學建築研究所

Team Name: NCTU/UNICODE
Address: 1001 Ta-Hsueh Road Hsinchu City 30010 Taiwan
Contact: www.sde.tw

Consultants:

Note:

Mark	Date	Description
DN	2013/04/01	SD Submission
DN	2013/07/01	DDc Submission
ST	2013/11/01	DD Submission
ST	2014/03/03	CD Submission
ST	2014/04/30	CD Submission
ST	2014/06/02	CD Submission

Drawn by	MS
Checked by	DN
Scale	-
Unit	-

DWG. Title: TRUCKS SHIPMENT 1

DWG. No. SO-001

PAGE 235

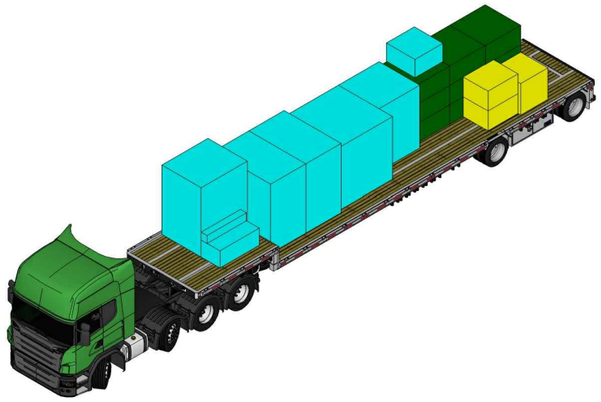

TRUCK-1 FLATBED
6/16 08:00

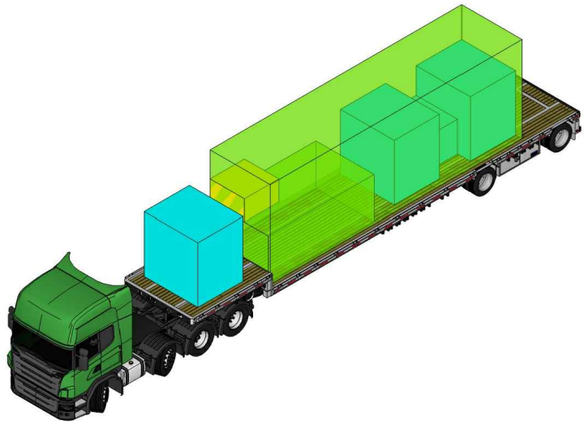

TRUCK-2 LOW LOADER
6/16 12:00

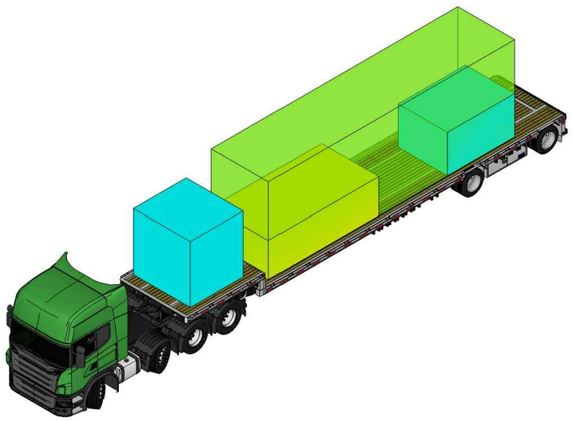

TRUCK-3 LOW LAODER
6/16 14:00

Truck No.(A)	Type	Designation	Package No.	Assembly No	QTY	Weight(kg)	Dimensions(mm)			Arrival
							L	W	H	
1	Flat	Tool	N30	1	1	150	1500	1500	1500	6/16 08:00
1	Flat	Tool	N32	1	1	10	1500	900	800	6/16 08:00
1	Flat	Tool	N33	1	1	50	1500	500	500	6/16 08:00
1	Flat	Tool	N25	3	1	150	1000	1000	1000	6/16 08:00
1	Flat	Wooden Sandbox	P27	4	1	150	2100	1300	1090	6/16 08:00
1	Flat	Wooden Sandbox	P28	4	1	150	2100	1300	1090	6/16 08:00
1	Flat	Wooden Sandbox	P31	4	1	150	1700	1450	1210	6/16 08:00
1	Flat	Steel Structure Footing	P14	6	1	440	1300	1300	620	6/16 08:00
1	Flat	Steel Structure Footing	P15	6	1	440	1300	1300	620	6/16 08:00
1	Flat	Steel Structure Footing	P16	6	1	440	1300	1300	620	6/16 08:00
1	Flat	Steel Structure Footing	P17	6	1	440	1300	1300	620	6/16 08:00
1	Flat	Steel Structure Footing	P18	6	1	440	1300	1300	620	6/16 08:00
1	Flat	Plastic Bucket	W1	11	1	890	1100	900	630	6/16 08:00
1	Flat	Plastic Bucket	W2	11	1	120	1100	900	630	6/16 08:00
1	Flat	Tool with Fire Extinguishers	P48-w	11	1	680	1500	1500	2000	6/16 08:00
1	Flat	Steel Structure Footing	P19	326	1	440	1300	1300	620	6/16 08:00
1	Flat	Steel Structure Footing	P20	326	1	440	1300	1300	620	6/16 08:00
1	Flat	Steel Structure Footing	P21	326	1	440	1300	1300	620	6/16 08:00
1	Flat	Steel Structure Footing	P22	326	1	440	1300	1300	620	6/16 08:00
1	Flat	Sand Bag	N34	1	1	6000	2000	2000	2000	6/16 08:00
total					20	12460				

Truck No.(A)	Type	Designation	Package No.	Assembly No	QTY	Weight(kg)	Dimensions(mm)			Arrival
							L	W	H	
2	Low	Steel Structure UNIT 12	P09	11	1	2640	9500	2275	3450	6/16 12:00
2	Low	Steel Structure UNIT 10	P07	51	1	550	4000	2200	1545	6/16 12:00
2	Low	GL Lower Wooden Box	P50	98	1	80	1865	1150	1140	6/16 12:00
2	Low	GL Lower Wooden Box	P52	98	1	180	1865	1150	1140	6/16 12:00
2	Low	Steel Structure Connection	P13-w	121	1	350	1300	1300	755	6/16 12:00
2	Low	ML Lower Wooden Box	P58	1	1	2500	2030	1710	1210	6/16 12:00
2	Low	ML Lower Wooden Box	P59	1	1	2500	2030	1710	1210	6/16 12:00
total					7	8800				

Truck No.(A)	Type	Designation	Package No.	Assembly No	QTY	Weight(kg)	Dimensions(mm)			Arrival
							L	W	H	
3	Low	Steel Structure UNIT 11	P08	15	1	2345	9500	2200	3450	6/16 14:00
3	Low	Aluminum Window Frame	W3	57	1	260	4450	2200	1300	6/16 14:00
3	Low	ML Upper Wooden Box	P60	122	1	420	2000	2000	2000	6/16 14:00
3	Low	Ceiling Structure	P46	178	1	70	1622	960	420	6/16 14:00
total					4	3095				

Solar Decathlon Europe

Project: ORCHID HOUSE

Institution: 國立交通大學 National Chiao Tung University

NCTU Architecture 國立交通大學建築研究所

Team Name: NCTU/UNICODE
Address: 1001 Ta-Hsueh Road
Hsinchu City 30010
Taiwan
Contact: www.sde.tw

Consultants:

Note:

Mark	Date	Description
DN	2013/04/01	SD Submission
DN	2013/07/01	DDc Submission
ST	2013/11/01	DD Submission
ST	2014/03/03	CD Submission
ST	2014/04/30	CD Submission
ST	2014/06/02	CD Submission

Drawn by	SC
Checked by	DN
Scale	-
Unit	-

DWG. Title: ASSEMBLY TRUCKS SHIPMENT 1

DWG. No.: SO-011

PAGE: 236

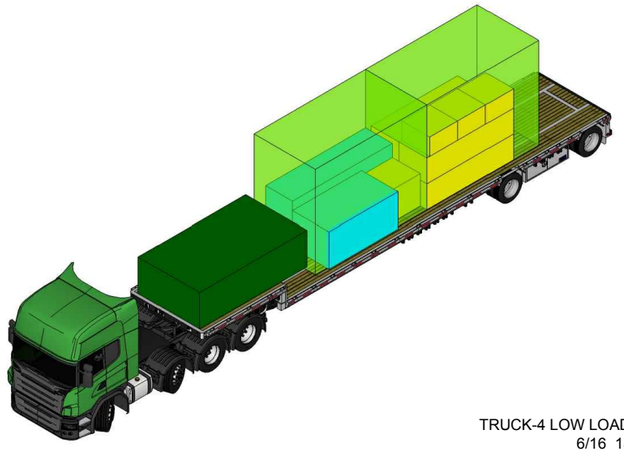

TRUCK-4 LOW LOADER
6/16 15:00

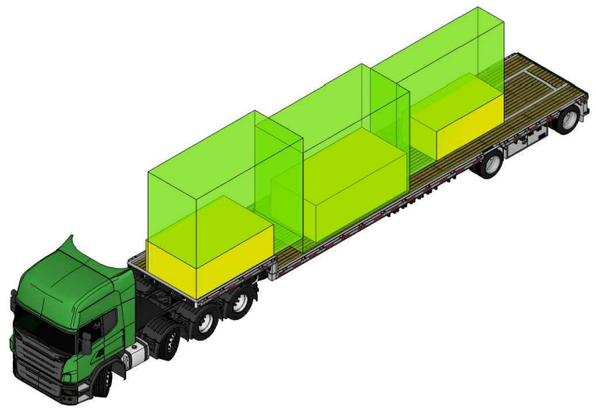

TRUCK-5 LOW LOADER
6/16 16:00

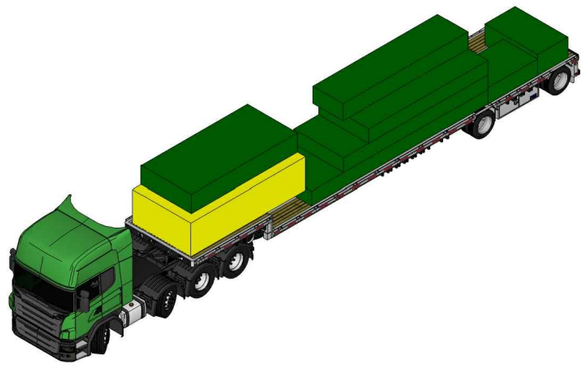

TRUCK-6 FLATBAD
6/16 23:00

Truck No.(A)	Type	Designation	Package No.	Assembly No	QTY	Weight(kg)	Dimensions(mm)			Arrival
							L	W	H	
4	Low	Steel Structure UNIT 05	P05	20	1	1150	4000	2200	3450	6/16 15:00
4	Low	Eform	N31	24	1	150	4000	2000	2000	6/16 15:00
4	Low	Steel Structure UNIT 04	P04	27	1	1025	4000	2200	3450	6/16 15:00
4	Low	Electrical Pipe	W22	32	1	80	3100	1000	800	6/16 15:00
4	Low	Water Pipe	W23	32	1	110	3100	1000	800	6/16 15:00
4	Low	Steel Structure UNIT 06	P06	54	1	1500	3850	2200	1130	6/16 15:00
4	Low	Vacuum Insulation Panel	P76	122	1	120	2480	1303	1200	6/16 15:00
4	Low	UIS Tool	N24	147	1	70	1000	1000	600	6/16 15:00
4	Low	UIS Tool	N21	147	1	70	1000	1000	600	6/16 15:00
4	Low	UIS Tool	N22	147	1	70	1000	1000	600	6/16 15:00
4	Low	UIS Tool	N23	147	1	70	1000	1000	1000	6/16 15:00
4	Low	Air Pipe	W24	153	1	50	3100	1000	800	6/16 15:00
4	Low	Exhaust Fan Air Pipe	W25	198	1	250	3100	1000	800	6/16 15:00
4	Low	PV Cable Tray	w25	244	1	250	3100	1000	800	6/16 15:00
total					14	4965				

Truck No.(A)	Type	Designation	Package No.	Assembly No	QTY	Weight(kg)	Dimensions(mm)			Arrival
							L	W	H	
5	Low	Tool	N12	3	1	835	2900	1890	1000	6/16 16:00
5	Low	Tool	N11	3	1	800	3400	1690	1200	6/16 16:00
5	Low	Steel Structure UNIT 03	P03	34	1	950	4000	1810	3450	6/16 16:00
5	Low	Steel Structure UNIT 02	P02	41	1	1000	4000	1790	3450	6/16 16:00
5	Low	Steel Structure UNIT 01	P01	46	1	900	4000	975	3450	6/16 16:00
5	Low	Wooden Sheet	W31	178	1	150	2600	1300	800	6/16 16:00
total					6	4635				

Truck No.(A)	Type	Designation	Package No.	Assembly No	QTY	Weight(kg)	Dimensions(mm)			Arrival
							L	W	H	
6	Flat	Steel Structure Beam	P37	83	1	1660	4030	1900	630	6/16 23:00
6	Flat	Steel Structure Stair	P39	92	1	350	4730	1150	565	6/16 23:00
6	Flat	Steel Structure Stair	P40	92	1	200	1890	1305	540	6/16 23:00
6	Flat	Steel Structure Stair	P38	92	1	400	2010	1150	690	6/16 23:00
6	Flat	Steel Structure Beam	P34	102	1	1540	4507.6	1900	480	6/16 23:00
6	Flat	Steel Structure Beam	P36	102	1	920	5451.5	1900	480	6/16 23:00
6	Flat	GL Upper Wooden Box	W26	122	1	760	4350	2200	1100	6/16 23:00
6	Flat	Steel Structure Column	P33	188	1	1700	6674.3	1900	480	6/16 23:00
total					8	7530				

Solar Decathlon Europe

Project: ORCHID HOUSE

Institution: 國立交通大學 National Chiao Tung University

NCTU Architecture 國立交通大學建築研究所

Team Name: NCTU/UNICODE
Address: 1001 Ta-Hsueh Road Hsinchu City 30010 Taiwan
Contact: www.sde.tw

Consultants:

Note:

Mark	Date	Description
DN	2013/04/01	SD Submission
DN	2013/07/01	DDc Submission
ST	2013/11/01	DD Submission
ST	2014/03/03	CD Submission
ST	2014/04/30	CD Submission
ST	2014/06/02	CD Submission

Drawn by	MS
Checked by	DN
Scale	-
Unit	-

DWG. Title: ASSEMBLY TRUCKS SHIPMENT 2

DWG. No. SO-012

PAGE 237

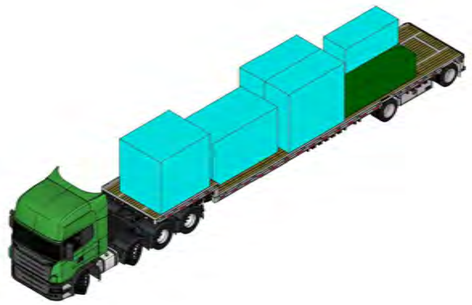

TRUCK-7 FLATBED
6/17 02:00

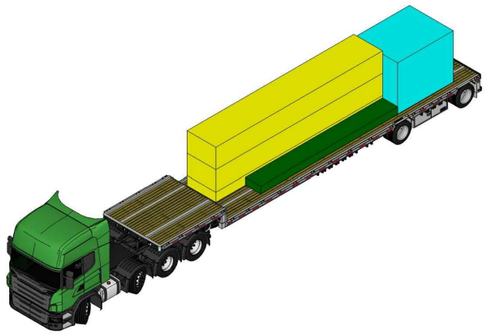

TRUCK-8 FLATBED
6/17 08:00

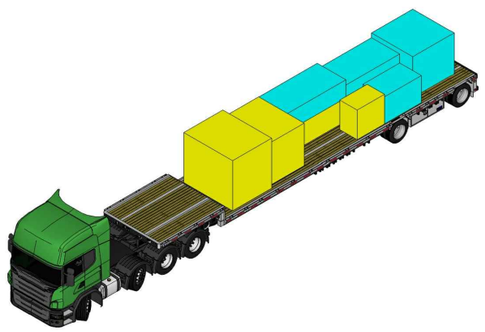

TRUCK-9 FLATBED
6/18 06:00

Truck No.(A)	Type	Designation	Package No.	Assembly No	QTY	Weight(kg)	Dimensions(mm)			Arrival
							L	W	H	
7	Flat	Bedroom Cabinet	P64	130	1	200	2515	1065	1000	6/17 02:00
7	Flat	Steel Structure Small Beam (South	P35	102	1	800	3530	1900	930	6/17 02:00
7	Flat	Wooden Box (Wall)	P61	125	1	2000	2650	1140	1236	6/17 02:00
7	Flat	Wooden Box (Wall)	P62	125	1	2000	2650	1140	1236	6/17 02:00
7	Flat	Kitchen Finish	P73	129	1	300	3050	1700	1830	6/17 02:00
7	Flat	Bedroom Cabinet	P74	130	1	220	2350	1950	2130	6/17 02:00
total					6	5520				

Truck No.(A)	Type	Designation	Package No.	Assembly No	QTY	Weight(kg)	Dimensions(mm)			Arrival
							L	W	H	
8	Flat	Steel Structure Canopy	P82	140	1	300	6250	700	300	6/17 08:00
8	Flat	Wooden Box	P77	146	1	360	2540	2000	2020	6/17 08:00
8	Flat	Stainless Steel Pool	W9	161	1	190	7600	1310	390	6/17 08:00
8	Flat	FRP Clean Water Tank	W35	162	1	110	7600	1310	880	6/17 08:00
8	Flat	FRP Gray Water Tank	W36	162	1	110	7600	1310	880	6/17 08:00
total					5	1070				

Truck No.(A)	Type	Designation	Package No.	Assembly No	QTY	Weight(kg)	Dimensions(mm)			Arrival
							L	W	H	
9	Flat	Small Wooden Box	P65	125	1	350	2500	1300	1440	6/18 06:00
9	Flat	Ceramic Panel	P75	146	1	860	2700	1320	720	6/18 06:00
9	Flat	Toilet equipment	W13	179	1	300	2100	1650	1680	6/18 06:00
9	Flat	Washing Machine	W11	207	1	150	800	1260	1180	6/18 06:00
9	Flat	Panasonic CO2 Heat Pump Tank	W12	207	1	270	1800	2250	1980	6/18 06:00
9	Flat	Hot Water Tank	P72	207	1	150	1700	1000	1080	6/18 06:00
9	Flat	Polli-Brick with Water and Sealed	P45	225	1	160	1900	1900	1730	6/18 06:00
9	Flat	Thermal Wall Outside Structure	W30	226	1	500	2500	1300	950	6/18 06:00
total					8	2740				

Solar Decathlon Europe

Project:

ORCHID HOUSE

Institution:

國立交通大學 National Chiao Tung University

NCTU Architecture
國立交通大學建築研究所

Team Name: NCTU/UNICODE
Address: 1001 Ta-Hsueh Road
Hsinchu City 30010
Taiwan
Contact: www.sde.tw

Consultants:

Note:

Mark	Date	Description
DN	2013/04/01	SD Submission
DN	2013/07/01	DDc Submission
ST	2013/11/01	DD Submission
ST	2014/03/03	CD Submission
ST	2014/04/30	CD Submission
ST	2014/06/02	CD Submission

Drawn by	MS
Checked by	DN
Scale	-
Unit	-

DWG. Title

ASSEMBLY TRUCKS
SHIPMENT 3

DWG. No. SO-013

PAGE 238

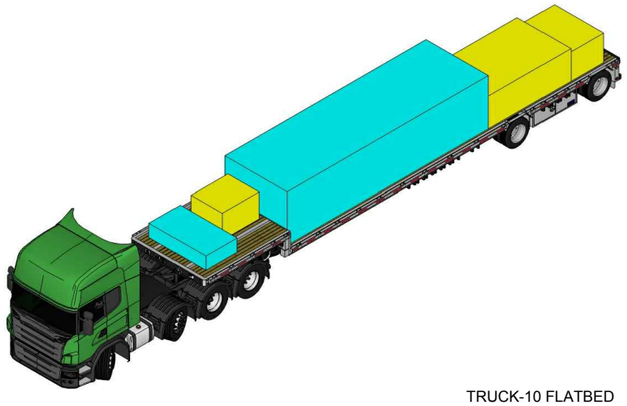

TRUCK-10 FLATBED
6/19 0200

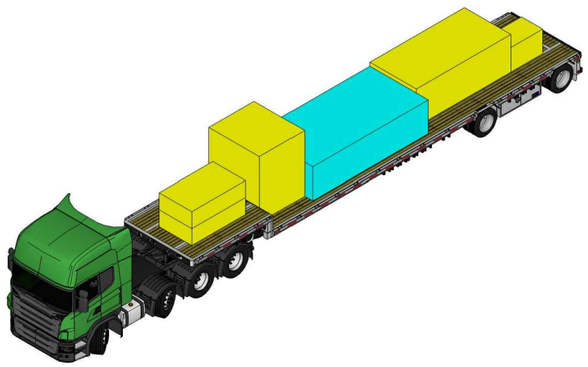

TRUCK-11 FLATBED
6/19 14:00

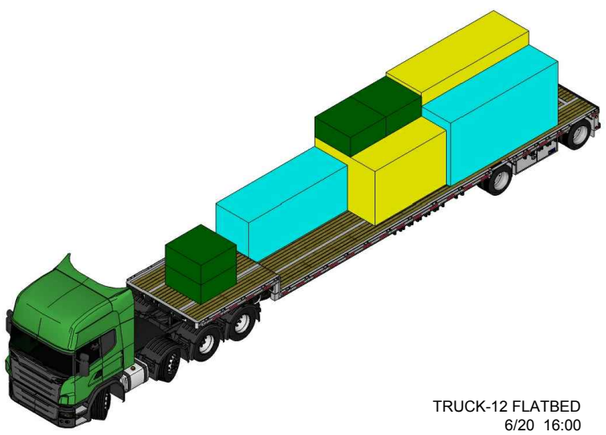

TRUCK-12 FLATBED
6/20 16:00

Truck No.(A)	Type	Designation	Package No.	Assembly No	QTY	Weight(kg)	Dimensions(mm) L	W	H	Arrival
10	Flat	PV Module	N26	242	1	160	1500	800	600	6/19 02:00
10	Flat	PV Module	N13	242	1	720	2900	1890	1000	6/19 02:00
10	Flat	Smart Skin UNIT	N14	243	1	275	1730	1150	900	6/19 02:00
10	Flat	Electrical equipment	W14	248	1	150	1100	1300	820	6/19 02:00
10		Bayer PC Hollow Sheet	P78	281	1	900	7100	2200	1630	6/19 02:00
total					5	2205				

Truck No.(A)	Type	Designation	Package No.	Assembly No	QTY	Weight(kg)	Dimensions(mm) L	W	H	Arrival
11	Flat	Glass Louver	W5	258	1	950	712	1200	740	6/19 14:00
11	Flat	kitchen&living equipment	W10	268	1	460	1900	1700	2130	6/19 14:00
11	Flat	Exhaust Fan	W15	270	1	200	1230	2020	550	6/19 14:00
11	Flat	Exhaust Fan	W16	270	1	200	1230	2020	550	6/19 14:00
11	Flat	Aluminum Louver Frame	W4	307	1	2000	3560	1750	1230	6/19 14:00
11	Flat	Plastic Wood Unit	P67	378	1	4200	4350	2200	1100	6/19 14:00
total					6	8010				

Truck No.(A)	Type	Designation	Package No.	Assembly No	QTY	Weight(kg)	Dimensions(mm) L	W	H	Arrival
12	Flat	Aluminum Windows	W32	258	1	140	2600	2200	2200	6/20 16:00
12	Flat	Steel Column Green Core	N6	276	1	2200	3900	1290	1215	6/20 16:00
12	Flat	Steel Column Green Core	N7	276	1	2200	3900	1290	1215	6/20 16:00
12	Flat	Steel Structure Footing	P23	326	1	440	1300	1300	620	6/20 16:00
12	Flat	Steel Structure Footing	P24	326	1	440	1300	1300	620	6/20 16:00
12	Flat	Steel Structure Footing	P25	326	1	440	1300	1300	620	6/20 16:00
12	Flat	Steel Structure Footing	P26	326	1	440	1300	1300	620	6/20 16:00
12	Flat	Plastic Wood Small Piece	N20	378	1	2000	3600	1200	1400	6/20 16:00
12	Flat	Sand Bag	N36	400	1	6000	2000	2000	2000	6/20 16:00
total					9	14300				

Solar Decathlon Europe

Project: ORCHID HOUSE

Institution: 國立交通大學 National Chiao Tung University

NCTU Architecture 國立交通大學建築研究所

Team Name: NCTU/UNICODE
Address: 1001 Ta-Hsueh Road
Hsinchu City 30010
Taiwan
Contact: www.sde.tw

Consultants:

Note:

Mark	Date	Description
DN	2013/04/01	SD Submission
DN	2013/07/01	DDc Submission
ST	2013/11/01	DD Submission
ST	2014/03/03	CD Submission
ST	2014/04/30	CD Submission
ST	2014/06/02	CD Submission

Drawn by	MS
Checked by	DN
Scale	-
Unit	-

DWG. Title

ASSEMBLY TRUCKS SHIPMENT 4

DWG. No. SO-014

PAGE 239

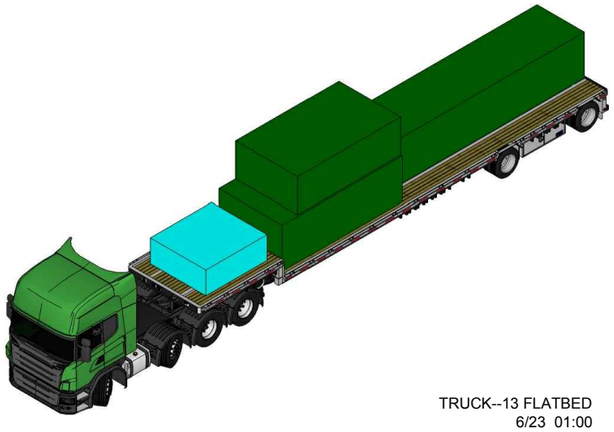

TRUCK--13 FLATBED
6/23 01:00

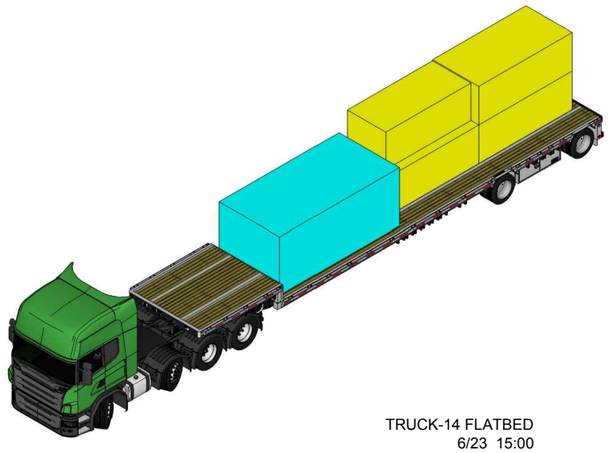

TRUCK-14 FLATBED
6/23 15:00

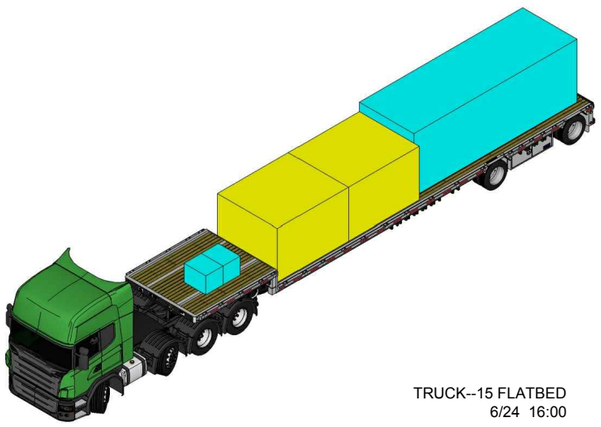

TRUCK--15 FLATBED
6/24 16:00

Truck No.(A)	Type	Designation	Package No.	Assembly No	QTY	Weight(kg)	Dimensions(mm)			Arrival
							L	W	H	
13	Flat	Solar Water Heater Frame	P44	328	1	220	2200	2000	800	6/23 01:00
13	Flat	Steel Structure UNIT 13	P10	334	1	1950	4300	2275	1430	6/23 01:00
13	Flat	Steel Structure UNIT 23	P11	334	1	3800	7000	1700	1430	6/23 01:00
13	Flat	Steel Structure UNIT 22	P12	334	1	1450	3700	2225	1180	6/23 01:00
total					4	7420				

Truck No.(A)	Type	Designation	Package No.	Assembly No	QTY	Weight(kg)	Dimensions(mm)			Arrival
							L	W	H	
14	Flat	FRP Rain Water Tank	W37	162	1	150	3100	1400	1180	6/23 15:00
14	Flat	Plastic Wood Unit	P68	378	1	4440	4350	2200	1830	6/23 15:00
14	Flat	Steel Outdoor Handrail	N1	396	1	800	3400	1685	1215	6/23 15:00
14	Flat	Steel Outdoor Handrail	N3	396	1	800	3400	1685	1215	6/23 15:00
14	Flat	Steel Outdoor Handrail	N2	396	1	800	3400	1685	1215	6/23 15:00
total					5	6990				

Truck No.(A)	Type	Designation	Package No.	Assembly No	QTY	Weight(kg)	Dimensions(mm)			Arrival
							L	W	H	
15	Flat	Home accessories	N27	410	1	80	800	400	400	6/24 16:00
15	Flat	Furniture	W33	410	1	260	2600	2200	2200	6/24 16:00
15	Flat	Furniture	W34	410	1	650	2600	2200	2200	6/24 16:00
15	Flat	Planting	N35	400	1	3000	7000	2000	2000	6/24 16:00
total					4	3990				

Solar Decathlon Europe

Project: ORCHID HOUSE

Institution: 國立交通大學 National Chiao Tung University

NCTU Architecture 國立交通大學建築研究所

Team Name: NCTU/UNICODE
Address: 1001 Ta-Hsueh Road
Hsinchu City 30010
Taiwan
Contact: www.sde.tw

Consultants:

Note:

Mark	Date	Description
DN	2013/04/01	SD Submission
DN	2013/07/01	DDc Submission
ST	2013/11/01	DD Submission
ST	2014/03/03	CD Submission
ST	2014/04/30	CD Submission
ST	2014/06/02	CD Submission

Drawn by	MS
Checked by	DN
Scale	-
Unit	-

DWG. Title: ASSEMBLY TRUCKS SHIPMENT 5

DWG. No. SO-015

PAGE 240

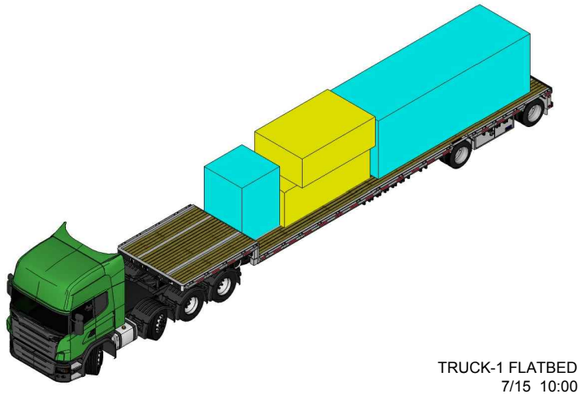

TRUCK-1 FLATBED
7/15 10:00

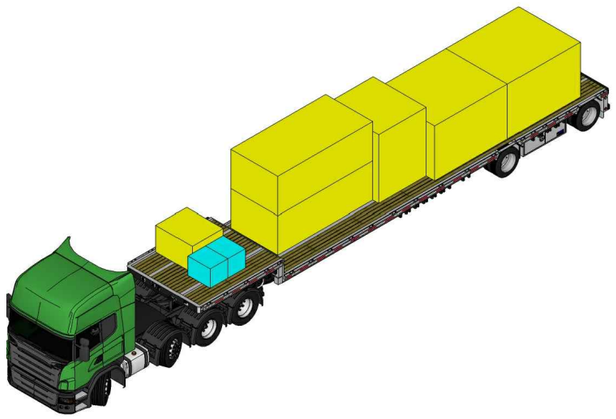

TRUCK-2 LOW LOADER
7/15 15:00

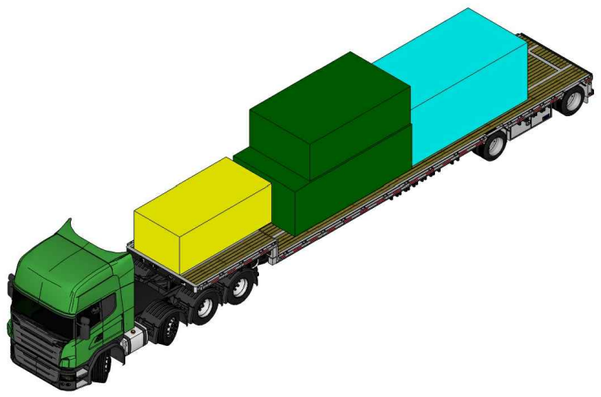

TRUCK-3 LOW LAODER
7/15 20:00

Truck No.(B)	Type	Designation	Package No.	Dismantling No	QTY	Weight(kg)	Dimensions(mm)			Arrival
							L	W	H	
1	Flat	Tool	N30	0	1	150	3400	1800	1100	7/15 10:00
1	Flat	Tool	N32	0	1	10	2900	1700	1100	7/15 10:00
1	Flat	Tool	N33	0	1	50	2000	2000	2000	7/15 10:00
1	Flat	Planting	N35	150	1	3000	7000	2000	2000	7/15 10:00
total					4	3210				
Truck No.(B)	Type	Designation	Package No.	Dismantling No	QTY	Weight(kg)	Dimensions(mm)			Arrival
							L	W	H	
2	Flat	Electrical equipment	W14	4	1	150	1100	1300	820	7/15 15:00
2	Flat	kitchen&living equipment	W10	3	1	460	1900	1700	2130	7/15 15:00
2	Flat	Steel Outdoor Handrail	N1	6	1	800	3400	1685	1215	7/15 15:00
2	Flat	Steel Outdoor Handrail	N2	6	1	800	3400	1685	1215	7/15 15:00
2	Flat	Home accessories	N27	1	1	80	800	400	400	7/15 15:00
2	Flat	Furniture	W33	2	1	260	2600	2200	2200	7/15 15:00
2	Flat	Furniture	W34	2	1	650	2600	2200	2200	7/15 15:00
total					7	3200				
Truck No.(B)	Type	Designation	Package No.	Dismantling No	QTY	Weight(kg)	Dimensions(mm)			Arrival
							L	W	H	
3	Flat	Steel Structure UNIT 13	P10	8	1	1950	4300	2275	1430	7/15 20:00
3	Flat	Steel Structure UNIT 22	P12	8	1	1450	3700	2225	1180	7/15 20:00
3	Flat	Plastic Wood Unit	P68	7	1	4440	4350	2200	1830	7/15 20:00
3	Flat	Steel Outdoor Handrail	N3	6	1	800	3400	1685	1215	7/15 20:00
total					4	8640				

Solar Decathlon Europe

Project: ORCHID HOUSE

Institution: 國立交通大學 National Chiao Tung University

NCTU Architecture 國立交通大學建築研究所

Team Name: NCTU/UNICODE
Address: 1001 Ta-Hsueh Road
Hsinchu City 30010
Taiwan
Contact: www.sde.tw

Consultants:

Note:

Mark	Date	Description
DN	2013/04/01	SD Submission
DN	2013/07/01	DDc Submission
ST	2013/11/01	DD Submission
ST	2014/03/03	CD Submission
ST	2014/04/30	CD Submission
ST	2014/06/02	CD Submission

Drawn by: SC
Checked by: DN
Scale: -
Unit: -

DWG. Title: DISASSEMBLY TRUCKS SHIPMENT 1

DWG. No.: SO-021

PAGE: 241

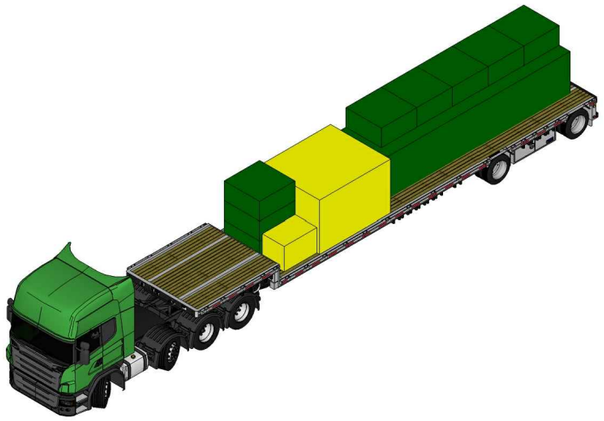

TRUCK-4 LOW LOADER
7/16 01:00

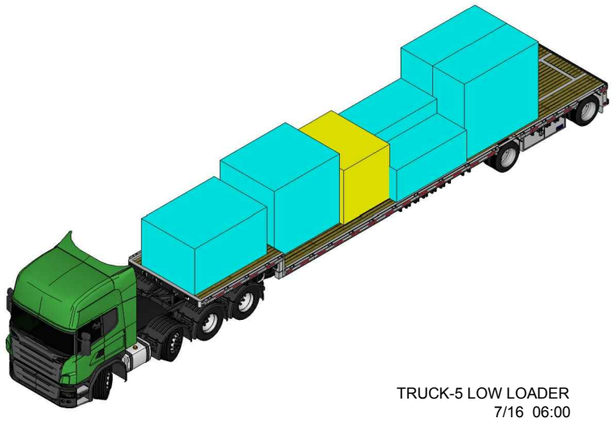

TRUCK-5 LOW LOADER
7/16 06:00

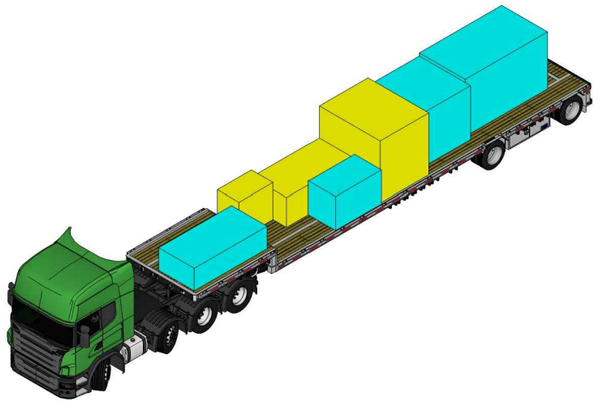

TRUCK-6 FLATBAD
7/16 12:00

Truck No.(B)	Type	Designation	Package No.	Dismantling No	QTY	Weight(kg)	Dimensions(mm)			Arrival
							L	W	H	
4	Flat	Glass Louver	W5	12	1	950	712	1200	740	7/16 01:00
4	Flat	Aluminum Windows	W32	15	1	140	2600	2200	2200	7/16 01:00
4	Flat	Steel Structure Footing	P19	9	1	440	1300	1300	620	7/16 01:00
4	Flat	Steel Structure Footing	P20	9	1	440	1300	1300	620	7/16 01:00
4	Flat	Steel Structure Footing	P21	9	1	440	1300	1300	620	7/16 01:00
4	Flat	Steel Structure Footing	P22	9	1	440	1300	1300	620	7/16 01:00
4	Flat	Steel Structure Footing	P23	9	1	440	1300	1300	620	7/16 01:00
4	Flat	Steel Structure Footing	P24	9	1	440	1300	1300	620	7/16 01:00
4	Flat	Steel Structure Footing	P25	9	1	440	1300	1300	620	7/16 01:00
4	Flat	Steel Structure Footing	P26	9	1	440	1300	1300	620	7/16 01:00
4	Flat	Steel Structure UNIT 23	P11	8	1	3800	7000	1700	1430	7/16 01:00
total					11	8410				

Truck No.(B)	Type	Designation	Package No.	Dismantling No	QTY	Weight(kg)	Dimensions(mm)			Arrival
							L	W	H	
5	Flat	Bedroom Cabinet	P64	25	1	200	2515	1065	1000	7/16 06:00
5	Flat	Wooden Box (Wall)	P61	21	1	2000	2650	1140	1236	7/16 06:00
5	Flat	Wooden Box (Wall)	P62	21	1	2000	2650	1140	1236	7/16 06:00
5	Flat	Small Wooden Box	P65	21	1	350	2500	1300	1440	7/16 06:00
5	Flat	Bedroom Cabinet	P74	25	1	220	2350	1950	2130	7/16 06:00
5	Flat	Ceiling Structure	P46	20	1	70	1622	960	420	7/16 06:00
5	Flat	Toilet equipment	W13	22	1	300	2100	1650	1680	7/16 06:00
total					7	5140				

Truck No.(B)	Type	Designation	Package No.	Dismantling No	QTY	Weight(kg)	Dimensions(mm)			Arrival
							L	W	H	
6	Flat	Kitchen Finish	P73	23	1	300	3050	1700	1830	7/16 12:00
6	Flat	Ceramic Panel	P75	31	1	860	2700	1320	720	7/16 12:00
6	Flat	Washing Machine	W11	28	1	150	800	1260	1180	7/16 12:00
6	Flat	Panasonic CO2 Heat Pump Tank	W12	28	1	270	1800	2250	1980	7/16 12:00
6	Flat	Hot Water Tank	P72	28	1	150	1700	1000	1080	7/16 12:00
6	Flat	Polli-Brick	P45	26	1	160	1900	1900	1730	7/16 12:00
6	Flat	Thermal Wall Outside Structure	W30	26	1	500	2500	1300	950	7/16 12:00
total					7	2390				

Solar Decathlon Europe

Project: ORCHID HOUSE

Institution: 國立交通大學 National Chiao Tung University

NCTU Architecture 國立交通大學建築研究所

Team Name: NCTU/UNICODE
Address: 1001 Ta-Hsueh Road Hsinchu City 30010 Taiwan
Contact: www.sde.tw

Consultants:

Note:

Mark	Date	Description
DN	2013/04/01	SD Submission
DN	2013/07/01	DDc Submission
ST	2013/11/01	DD Submission
ST	2014/03/03	CD Submission
ST	2014/04/30	CD Submission
ST	2014/06/02	CD Submission

Drawn by: MS
Checked by: DN
Scale: -
Unit: -

DWG. Title: DISASSEMBLY TRUCKS SHIPMENT 2

DWG. No.: SO-022

PAGE: 242

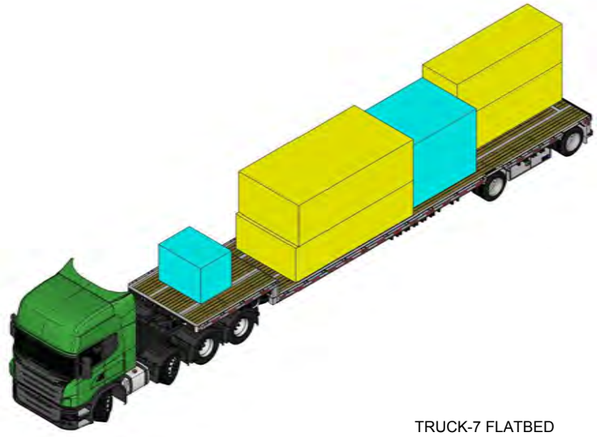

TRUCK-7 FLATBED
7/16 23:00

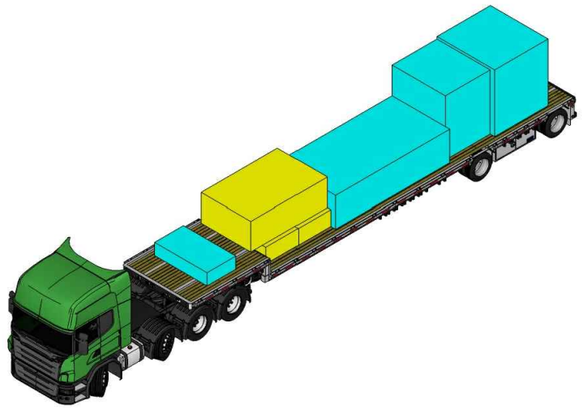

TRUCK-8 FLATBED
7/17 09:00

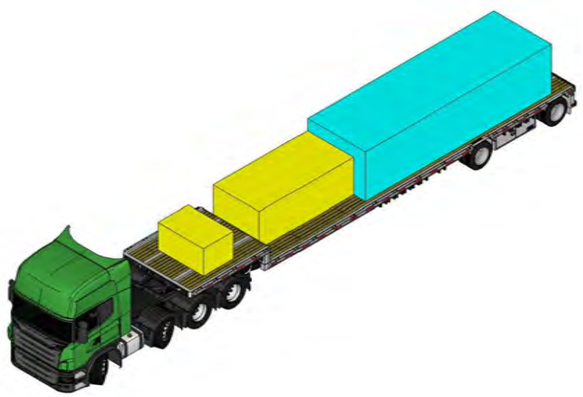

TRUCK-9 FLATBED
7/17 15:00

Truck No.(B)	Type	Designation	Package No.	Dismantling No	QTY	Weight(kg)	Dimensions(mm)			Arrival
							L	W	H	
7	Flat	Aluminum Window Frame	W3	38	1	260	4450	2200	1300	7/16 23:00
7	Flat	GL Lower Wooden Box	P50	39	1	80	1865	1150	1140	7/16 23:00
7	Flat	GL Upper Wooden Box	W26	36	1	760	4350	2200	1100	7/16 23:00
7	Flat	Wooden Box	P77	31	1	360	2540	2000	2020	7/16 23:00
7	Flat	Steel Column Green Core	N6	35	1	2200	3900	1290	1215	7/16 23:00
7	Flat	Steel Column Green Core	N7	35	1	2200	3900	1290	1215	7/16 23:00
total					6	5860				
Truck No.(B)	Type	Designation	Package No.	Dismantling No	QTY	Weight(kg)	Dimensions(mm)			Arrival
							L	W	H	
8	Flat	GL Lower Wooden Box	P52	39	1	180	1865	1150	1140	7/17 09:00
8	Flat	ML Upper Wooden Box	P60	37	1	420	2000	2000	2000	7/17 09:00
8	Flat	PV Module	N26	0	1	160	1500	800	600	7/17 09:00
8	Flat	PV Module	N13	50	1	720	2900	1890	1000	7/17 09:00
8	Flat	Exhaust Fan	W15	45	1	200	1230	2020	550	7/17 09:00
8	Flat	Exhaust Fan	W16	45	1	200	1230	2020	550	7/17 09:00
8	Flat	Plastic Wood Unit	P67	40	1	4200	4350	2200	1100	7/17 09:00
total					7	6080				
Truck No.(B)	Type	Designation	Package No.	Dismantling No	QTY	Weight(kg)	Dimensions(mm)			Arrival
							L	W	H	
9	Flat	Smart Skin UNIT	N14	51	1	275	1730	1150	900	7/17 15:00
9	Flat	Bayer PC Hollow Sheet	P78	55	1	900	7100	2200	1630	7/17 15:00
9	Flat	Aluminum Louver Frame	W4	53	1	2000	3560	1750	1230	7/17 15:00
total					3	3175				

Solar Decathlon Europe

Project: ORCHID HOUSE

Institution: 國立交通大學 National Chiao Tung University

NCTU Architecture 國立交通大學建築研究所

Team Name: NCTU/UNICODE
Address: 1001 Ta-Hsueh Road
Hsinchu City 30010
Taiwan
Contact: www.sde.tw

Consultants:

Note:

Mark	Date	Description
DN	2013/04/01	SD Submission
DN	2013/07/01	DDc Submission
ST	2013/11/01	DD Submission
ST	2014/03/03	CD Submission
ST	2014/04/30	CD Submission
ST	2014/06/02	CD Submission

Drawn by	SC
Checked by	DN
Scale	-
Unit	-

DWG. Title

DISASSEMBLY TRUCKS SHIPMENT 3

DWG. No. SO-023

PAGE 243

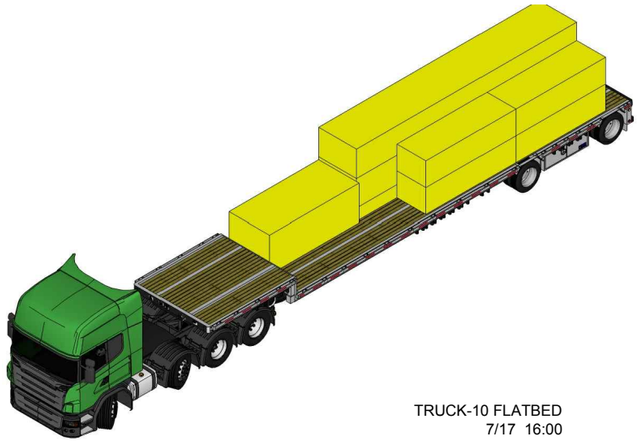

TRUCK-10 FLATBED
7/17 16:00

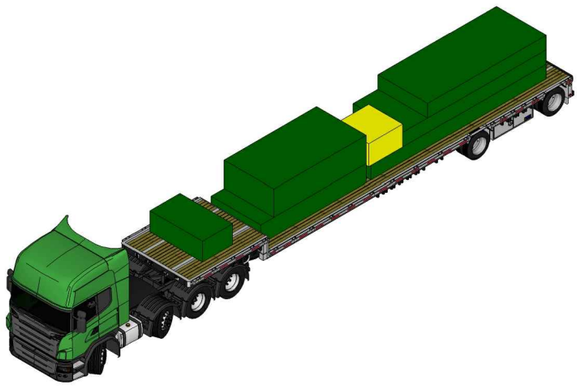

TRUCK-11 FLATBED
7/18 23:00

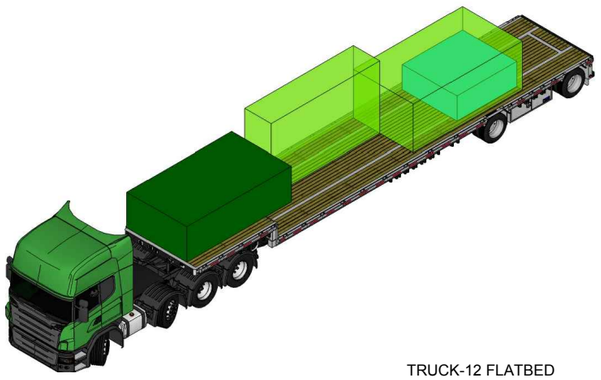

TRUCK-12 FLATBED
7/19 02:00

Truck No.(B)	Type	Designation	Package No.	Dismantling No	QTY	Weight(kg)	Dimensions(mm)			Arrival
							L	W	H	
10	Flat	Electrical Pipe	W22	56	1	80	3100	1000	800	7/17 16:00
10	Flat	Water Pipe	W23	56	1	110	3100	1000	800	7/17 16:00
10	Flat	Air Pipe	W24	30	1	50	3100	1000	800	7/17 16:00
10	Flat	Stainless Steel Pool	W9	29	1	190	7600	1310	390	7/17 16:00
10	Flat	FRP Clean Water Tank	W35	57	1	110	7600	1310	880	7/17 16:00
10	Flat	FRP Gray Water Tank	W36	57	1	110	7600	1310	880	7/17 16:00
10	Flat	FRP Rain Water Tank	W37	57	1	150	3100	1400	1180	7/17 16:00
10	Flat	Exhaust Fan Air Pipe	W25	56	1	250	3100	1000	800	7/17 16:00
10	Flat	PV Cable Tray	w25	56	1	250	3100	1000	800	7/17 16:00
total					9	1300				

Truck No.(B)	Type	Designation	Package No.	Dismantling No	QTY	Weight(kg)	Dimensions(mm)			Arrival
							L	W	H	
11	Flat	Steel Structure Beam	P37	133	1	1660	4030	1900	630	7/18 23:00
11	Flat	Steel Structure Stair	P38	133	1	400	2010	1150	690	7/18 23:00
11	Flat	Steel Structure Small Beam	P35	122	1	800	3530	1900	930	7/18 23:00
11	Flat	Steel Structure Beam	P34	122	1	1540	4507.6	1900	480	7/18 23:00
11	Flat	Steel Structure Beam	P36	122	1	920	5451.5	1900	480	7/18 23:00
11	Flat	Steel Structure Connection	P13-w	124	1	350	1300	1300	755	7/18 23:00
11	Flat	Steel Structure Column	P33	105	1	1700	6674.3	1900	480	7/18 23:00
total					7	7370				

Truck No.(B)	Type	Designation	Package No.	Dismantling No	QTY	Weight(kg)	Dimensions(mm)			Arrival
							L	W	H	
12	Low	Steel Structure UNIT 01	P01	141	1	900	4000	975	3450	7/19 02:00
12	Low	Steel Structure UNIT 10	P07	138	1	550	4000	2200	1545	7/19 02:00
12	Low	Steel Structure UNIT 06	P06	134	1	1500	3850	2200	1130	7/19 02:00
12	Low	Solar Water Heater Frame	P44	54	1	220	2200	2000	800	7/19 02:00
total					4	3170				

Solar Decathlon Europe

Project:

ORCHID HOUSE

Institution:

國立交通大學 National Chiao Tung University

NCTU Architecture
國立交通大學建築研究所

Team Name: NCTU/UNICODE

Address: 1001 Ta-Hsueh Road
Hsinchu City 30010
Taiwan

Contact: www.sde.tw

Consultants:

Note:

Mark	Date	Description
DN	2013/04/01	SD Submission
DN	2013/07/01	DDc Submission
ST	2013/11/01	DD Submission
ST	2014/03/03	CD Submission
ST	2014/04/30	CD Submission
ST	2014/06/02	CD Submission

Drawn by: MS

Checked by: DN

Scale: -

Unit: -

DWG. Title: DISASSEMBLY TRUCKS SHIPMENT 4

DWG. No.: SO-024

PAGE: 244

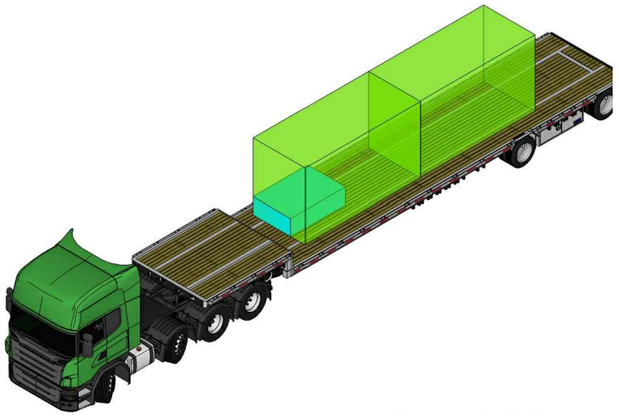

TRUCK--13 FLATBED
7/19 03:00

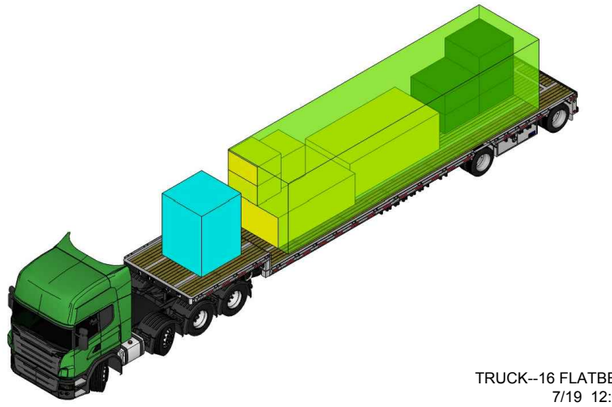

TRUCK--16 FLATBED
7/19 12:00

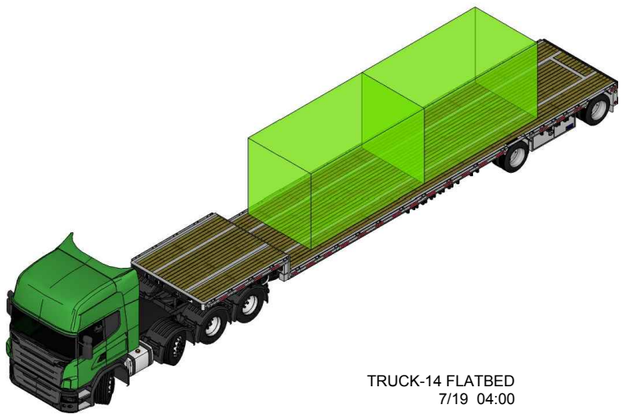

TRUCK-14 FLATBED
7/19 04:00

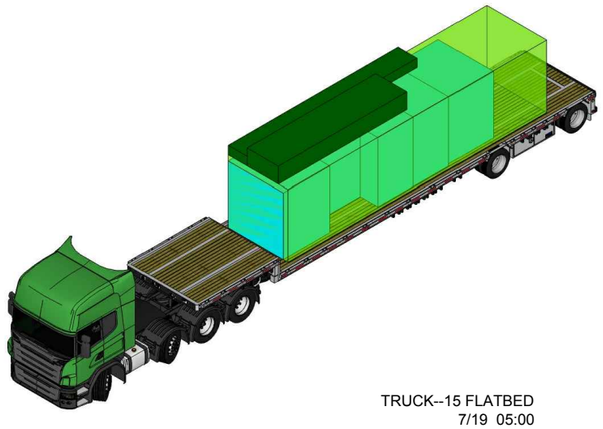

TRUCK--15 FLATBED
7/19 05:00

Truck No.(B)	Type	Designation	Package No.	Dismantling No	QTY	Weight(kg)	Dimensions(mm)			Arrival
							L	W	H	
13	Low	Steel Structure UNIT 03	P03	143	1	950	4000	1810	3450	7/19 03:00
13	Low	Steel Structure UNIT 02	P02	142	1	1000	4000	1790	3450	7/19 03:00
13	Low	Steel Structure Stair	P40	132	1	200	1890	1305	540	7/19 03:00
total					3	2150				
Truck No.(B)	Type	Designation	Package No.	Dismantling No	QTY	Weight(kg)	Dimensions(mm)			Arrival
							L	W	H	
14	Low	Steel Structure UNIT 05	P05	145	1	1150	4000	2200	3450	7/19 04:00
14	Low	Steel Structure UNIT 04	P04	144	1	1025	4000	2200	3450	7/19 04:00
total					2	2175				
Truck No.(B)	Type	Designation	Package No.	Dismantling No	QTY	Weight(kg)	Dimensions(mm)			Arrival
							L	W	H	
15	Low	Wooden Sandbox	P27	149	1	150	2100	1300	1090	7/19 05:00
15	Low	Wooden Sandbox	P28	149	1	150	2100	1300	1090	7/19 05:00
15	Low	Wooden Sandbox	P31	149	1	150	1700	1450	1210	7/19 05:00
15	Low	Steel Structure UNIT 11	P08	147	1	2345	9500	2200	3450	7/19 05:00
15	Low	Steel Structure Stair	P39	132	1	350	4730	1150	565	7/19 05:00
15	Low	Steel Structure Canopy	P82	131	1	300	6250	700	300	7/19 05:00
15	Low	ML Lower Wooden Box	P58	150	1	2500	2030	1710	1210	7/19 05:00
15	Low	ML Lower Wooden Box	P59	150	1	2500	2030	1710	1210	7/19 05:00
total					8	8445				
Truck No.(B)	Type	Designation	Package No.	Dismantling No	QTY	Weight(kg)	Dimensions(mm)			Arrival
							L	W	H	
16	Low	Tool	N12	150	1	835	2900	1890	1000	7/19 12:00
16	Low	Tool	N25	150	1	150	1000	1000	1000	7/19 12:00
16	Low	Tool	N11	150	1	800	3400	1690	1200	7/19 12:00
16	Low	Steel Structure Footing	P14	149	1	440	1300	1300	620	7/19 12:00
16	Low	Steel Structure Footing	P15	149	1	440	1300	1300	620	7/19 12:00
16	Low	Steel Structure Footing	P16	149	1	440	1300	1300	620	7/19 12:00
16	Low	Steel Structure Footing	P17	149	1	440	1300	1300	620	7/19 12:00
16	Low	Steel Structure Footing	P18	149	1	440	1300	1300	620	7/19 12:00
16	Low	Steel Structure UNIT 12	P09	148	1	2640	9500	2275	3450	7/19 12:00
16	Low	Plastic Bucket	W1	150	1	890	1100	900	630	7/19 12:00
16	Low	Plastic Bucket	W2	150	1	120	1100	900	630	7/19 12:00
16	Low	Tool	P48-w	150	1	680	1500	1500	2000	7/19 12:00
16	Low	Sand Bag	N34	150	1	6000	2000	2000	2000	7/19 12:00
16	Low	Sand Bag	N36	150	1	6000	2000	2000	2000	7/19 12:00
total					14	20315				

Solar Decathlon Europe

Project: ORCHID HOUSE

Institution: 國立交通大學 National Chiao Tung University

NCTU Architecture 國立交通大學建築研究所

Team Name: NCTU/UNICODE
Address: 1001 Ta-Hsueh Road
Hsinchu City 30010
Taiwan
Contact: www.sde.tw

Consultants:

Note:

Mark	Date	Description
DN	2013/04/01	SD Submission
DN	2013/07/01	DDc Submission
ST	2013/11/01	DD Submission
ST	2014/03/03	CD Submission
ST	2014/04/30	CD Submission
ST	2014/06/02	CD Submission

Drawn by	MS
Checked by	DN
Scale	-
Unit	-

DWG. Title

DISASSEMBLY TRUCKS
SHIPMENT 5

DWG. No. SO-025

PAGE 245

Solar Decathlon Europe

Project: ORCHID HOUSE

Institution: 國立交通大學 National Chiao Tung University

NCTU Architecture 國立交通大學建築研究所

Team Name:	NCTU/UNICODE
Address:	1001 Ta-Hsueh Road Hsinchu City 30010 Taiwan
Contact:	www.sde.tw

Consultants:

Note:

Mark	Date	Description
DN	2013/04/01	SD Submission
DN	2013/07/01	DDc Submission
ST	2013/11/01	DD Submission
ST	2014/03/03	CD Submission
ST	2014/04/30	CD Submission
ST	2014/06/02	CD Submission

Drawn by	ST
Checked by	DN
Scale	1:1100
Unit	mm

DWG. Title: La Cité du Soleil® PLAN

DWG. No.: SO-101

PAGE: 246

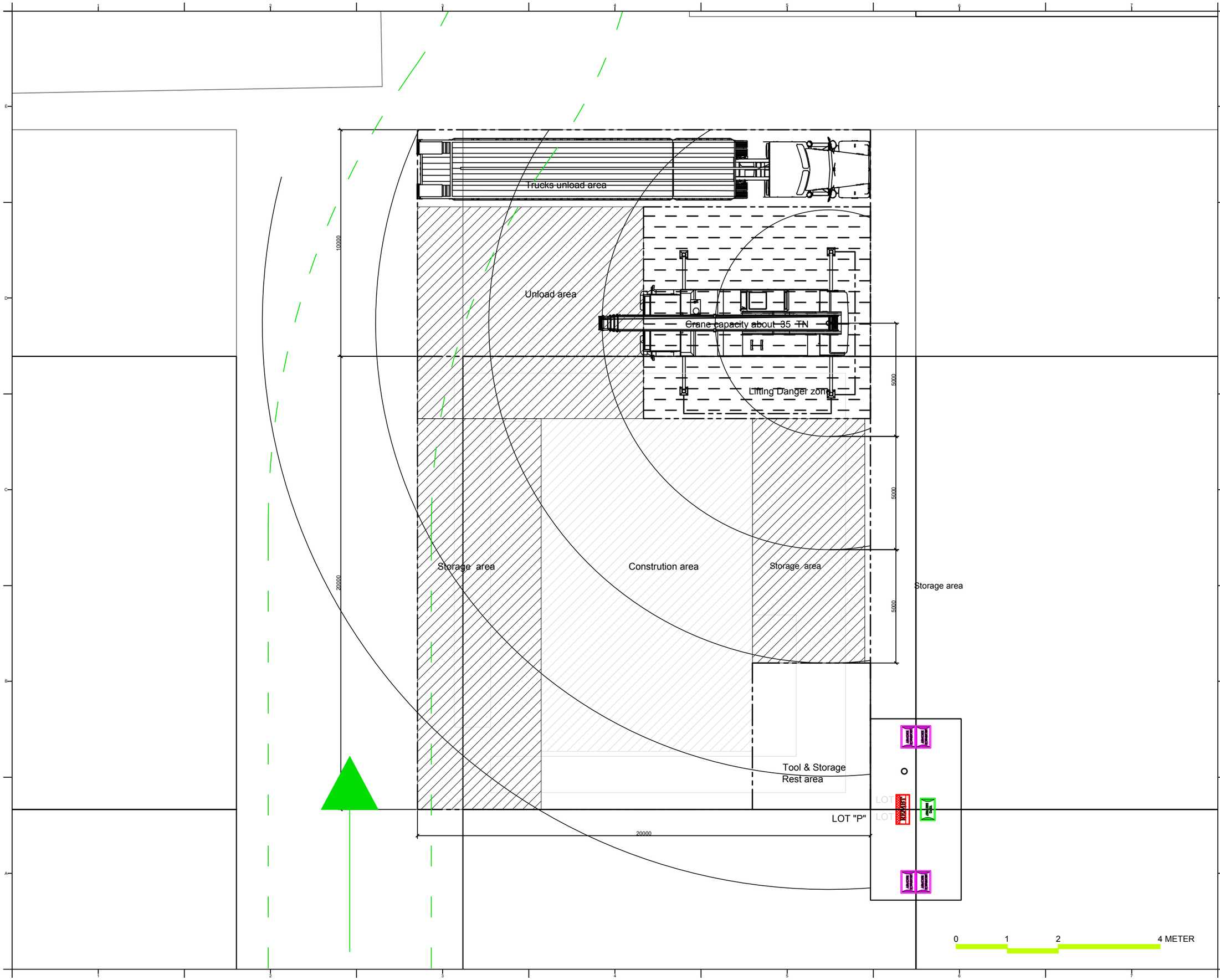

Solar Decathlon Europe

Project: ORCHID HOUSE

Institution: 國立交通大學 National Chiao Tung University

NCTU Architecture 國立交通大學建築研究所

Team Name:	NCTU/UNICODE
Address:	1001 Ta-Hsueh Road Hsinchu City 30010 Taiwan
Contact:	www.sde.tw

Consultants:

Note:

Mark	Date	Description
DN	2013/04/01	SD Submission
DN	2013/07/01	DDc Submission
ST	2013/11/01	DD Submission
ST	2014/03/03	CD Submission
ST	2014/04/30	CD Submission
ST	2014/06/02	CD Submission

Drawn by	MS
Checked by	DN
Scale	1:150
Unit	mm

DWG. Title: LOT PLAN

DWG. No.: SO-102

PAGE: 247

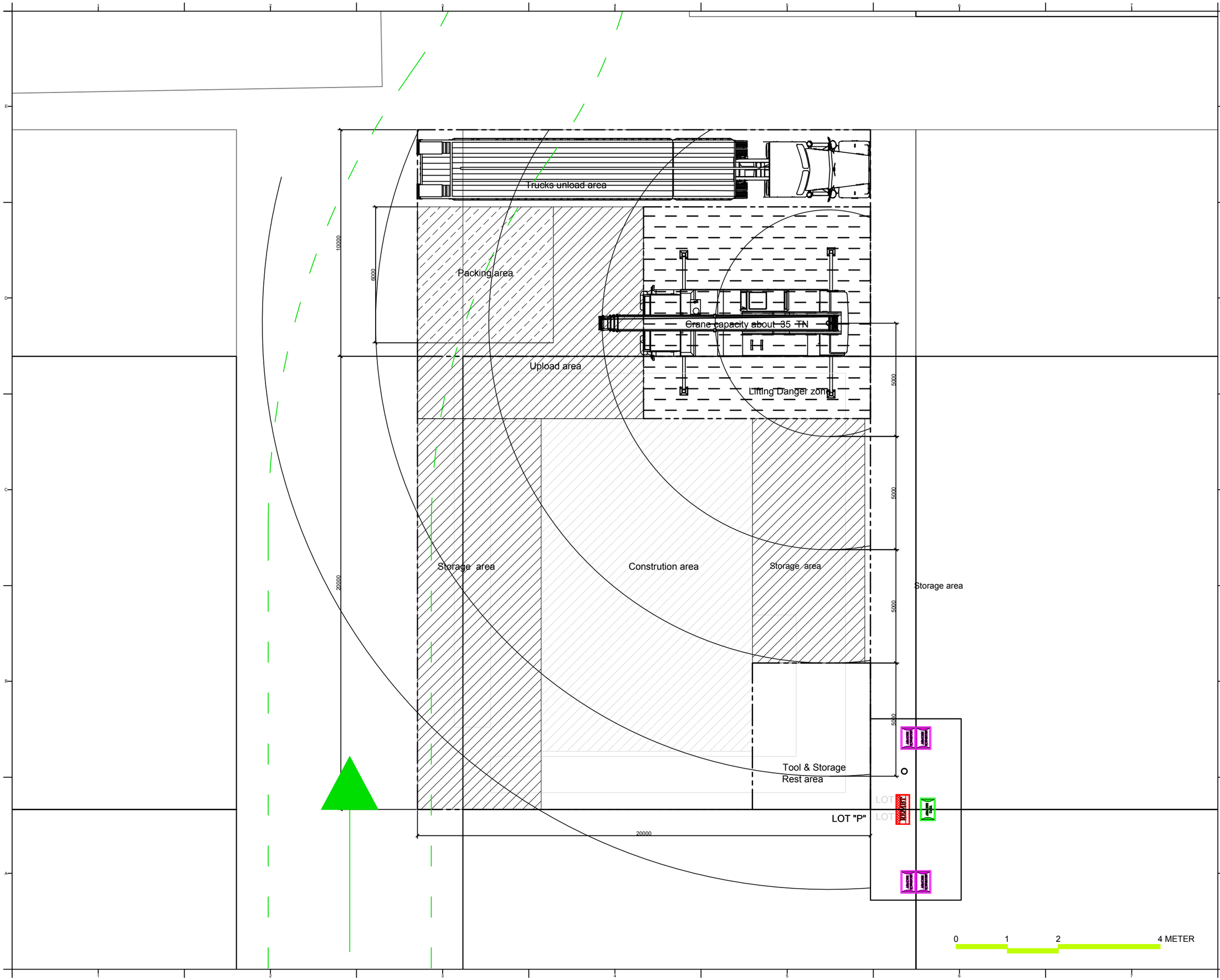

Solar Decathlon Europe

Project:

ORCHID HOUSE

Institution:

國立交通大學 National Chiao Tung University

NCTU Architecture 國立交通大學建築研究所

Team Name:	NCTU/UNICODE
Address:	1001 Ta-Hsueh Road Hsinchu City 30010 Taiwan
Contact:	www.sde.tw

Consultants:

Note:

Mark	Date	Description
DN	2013/04/01	SD Submission
DN	2013/07/01	DDc Submission
ST	2013/11/01	DD Submission
ST	2014/03/03	CD Submission
ST	2014/04/30	CD Submission
ST	2014/06/02	CD Submission

Drawn by	SC
Checked by	-
Scale	1:150
Unit	mm

DWG. Title

DISASSEMBLY LOT PLAN

DWG. No.	PAGE
SO-103	248

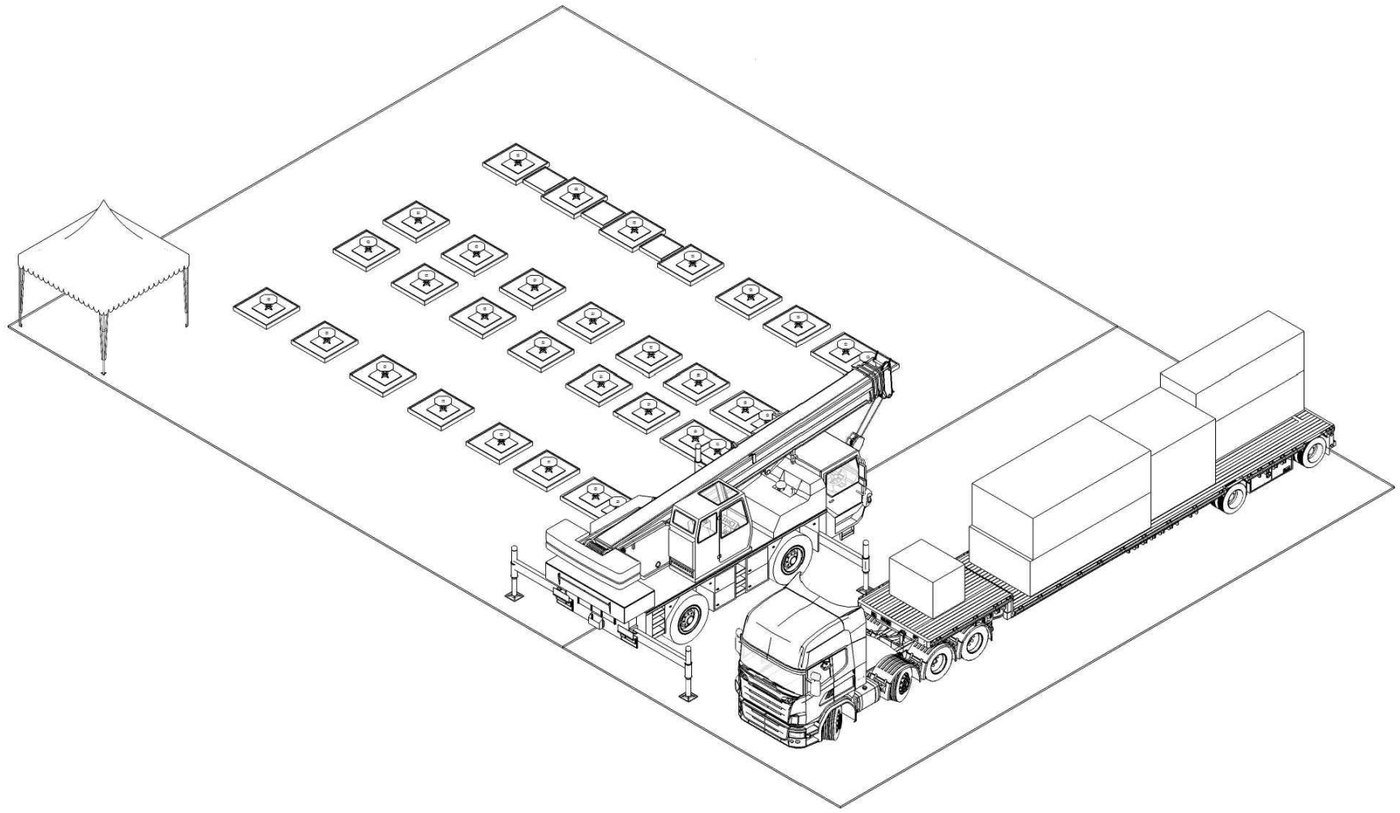

Site-Preparation

Step	1	2	3	4	5	6	7	8	9
Work Deatail	Datum Point	Spacing	Sand Box	Footing Set	Coordinate positioning	Horizontal correction			
Woker	6	4	4	4	6	4			
Note									

Solar Decathlon Europe

Project: ORCHID HOUSE

Institution: 國立交通大學 National Chiao Tung University

NCTU Architecture 國立交通大學建築研究所

Team Name: NCTU/UNICODE

Address: 1001 Ta-Hsueh Road
Hsinchu City 30010
Taiwan

Contact: www.sde.tw

Consultants:

Note:

N

Mark	Date	Description
DN	2013/04/01	SD Submission
DN	2013/07/01	DDc Submission
ST	2013/11/01	DD Submission
ST	2014/03/03	CD Submission
ST	2014/04/30	CD Submission
ST	2014/06/02	CD Submission

Drawn by: MS

Checked by: DN

Scale: -

Unit: -

DWG. Title: Assembly Phase 1

DWG. No.: SO-201

PAGE: 249

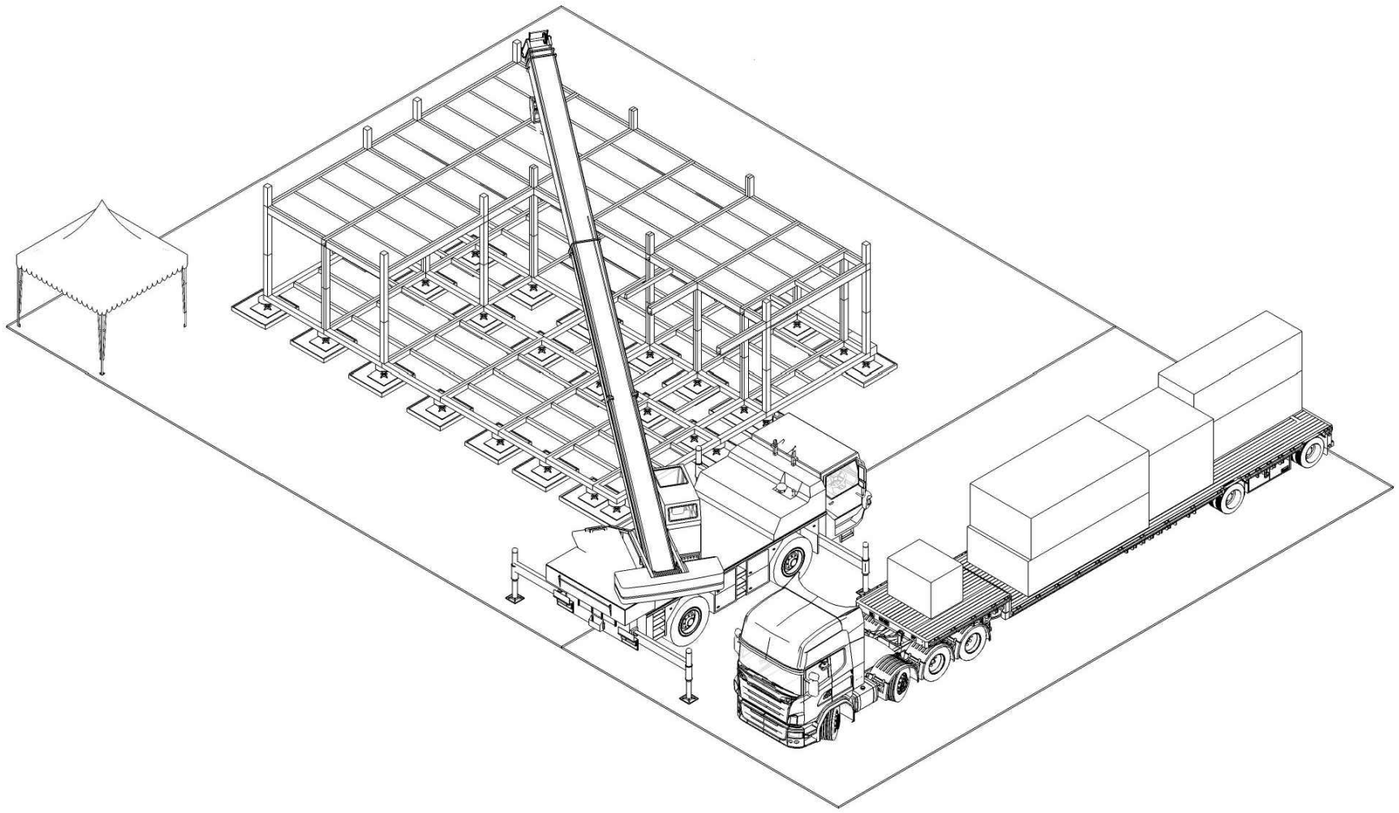

Modular Unit

Step	1	2	3	4	5	6	7	8	9
Work Deatail	Modular Unit 1~5 Modular Unit 11~12	M.E.P Ststem Under Unit	Unit combination	Building positioning correction					
Woker	8	4	4	6					
Note									

Solar Decathlon Europe

Project: ORCHID HOUSE

Institution: 國立交通大學 National Chiao Tung University

NCTU Architecture 國立交通大學建築研究所

Team Name: NCTU/UNICODE

Address: 1001 Ta-Hsueh Road
Hsinchu City 30010
Taiwan

Contact: www.sde.tw

Consultants:

Note:

Mark	Date	Description
DN	2013/04/01	SD Submission
DN	2013/07/01	DDc Submission
ST	2013/11/01	DD Submission
ST	2014/03/03	CD Submission
ST	2014/04/30	CD Submission
ST	2014/06/02	CD Submission

Drawn by	MS
Checked by	DN
Scale	-
Unit	-

DWG. Title: Assembly Phase 2

DWG. No. SO-202

PAGE 250

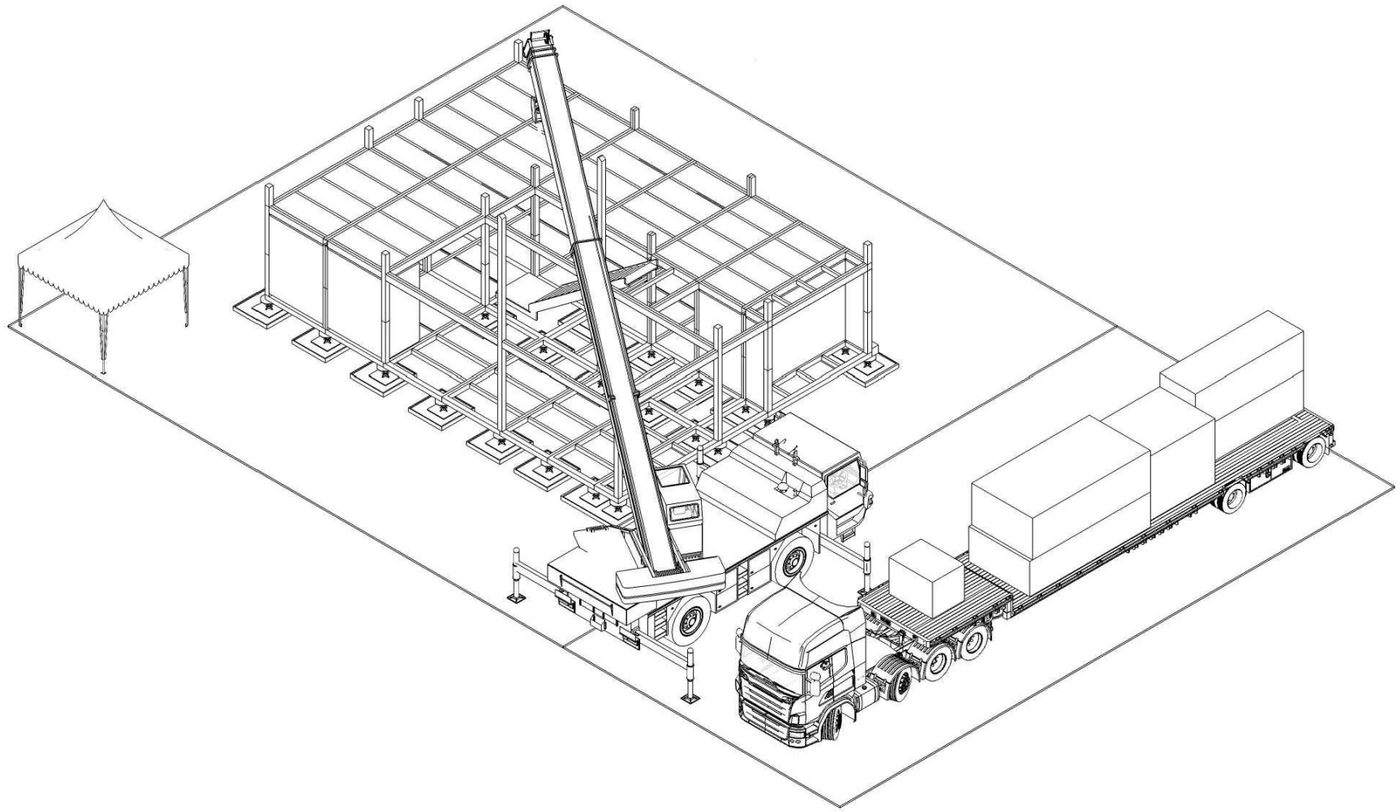

Insulation

Step	1	2	3	4	5	6	7	8	9
Work Deatail	Stair Unit and Terrace Unit Assembly and Lifting	Interior Insulation Assembly	M.E.P System Tube and trunking	Interior Upper Floor Insulation					
Woker	5	4	4	6					
Note									

Solar Decathlon Europe

Project:

ORCHID HOUSE

Institution:

國立交通大學 National Chiao Tung University

NCTU Architecture 國立交通大學建築研究所

Team Name: NCTU/UNICODE

Address: 1001 Ta-Hsueh Road Hsinchu City 30010 Taiwan

Contact: www.sde.tw

Consultants:

Note:

N

Mark	Date	Description
DN	2013/04/01	SD Submission
DN	2013/07/01	DDc Submission
ST	2013/11/01	DD Submission
ST	2014/03/03	CD Submission
ST	2014/04/30	CD Submission
ST	2014/06/02	CD Submission

Drawn by: MS

Checked by: DN

Scale: -

Unit: -

DWG. Title: Assembly Phase 3

DWG. No.: SO-203

PAGE: 251

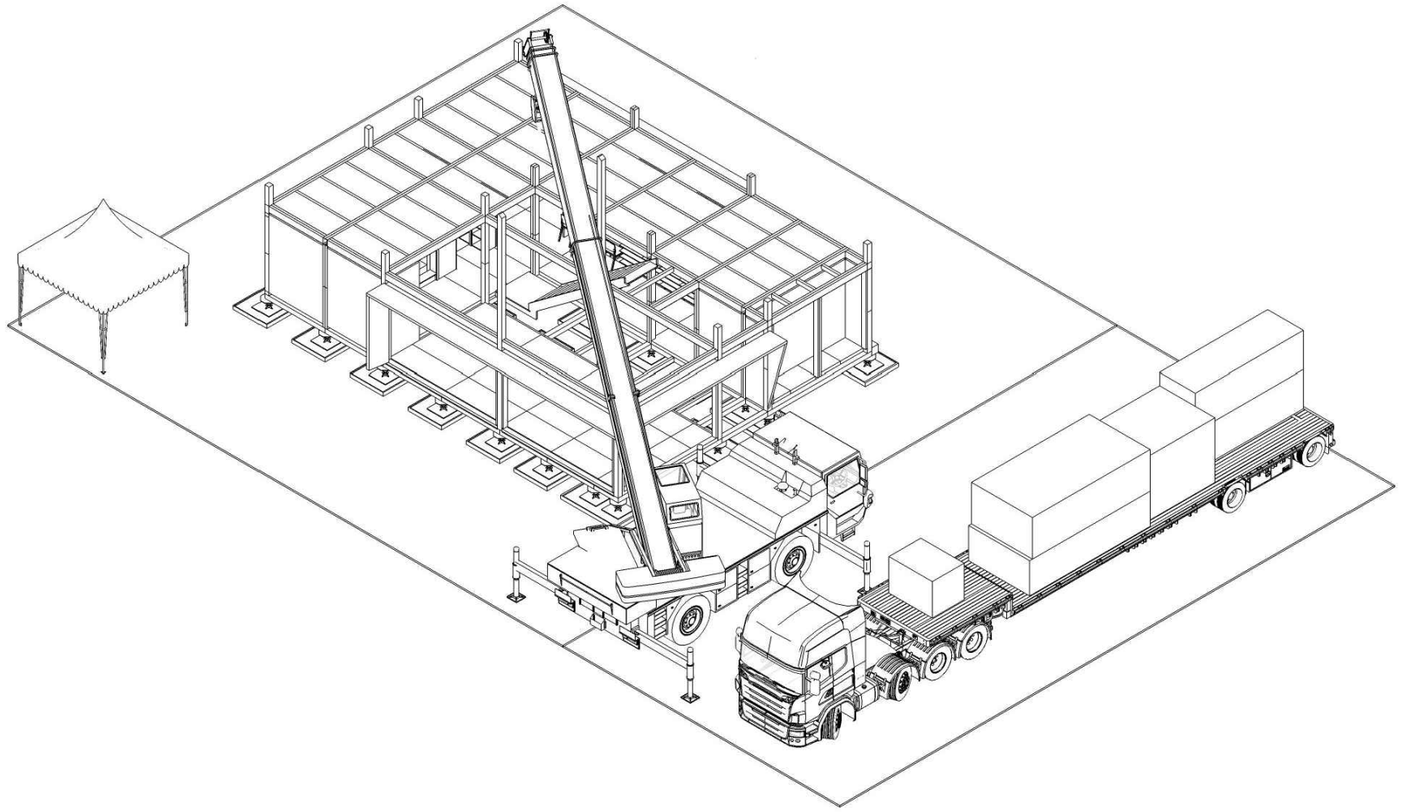

MEP System

Step	1	2	3	4	5	6	7	8	9
Work Deatail	Additional components	M.E.P System Shaft							
Woker	6	4							
Note									

Solar Decathlon Europe

Project:

ORCHID HOUSE

Institution:

國立交通大學 National Chiao Tung University

NCTU Architecture 國立交通大學建築研究所

Team Name: NCTU/UNICODE

Address: 1001 Ta-Hsueh Road
Hsinchu City 30010
Taiwan

Contact: www.sde.tw

Consultants:

Note:

N

Mark	Date	Description
DN	2013/04/01	SD Submission
DN	2013/07/01	DDc Submission
ST	2013/11/01	DD Submission
ST	2014/03/03	CD Submission
ST	2014/04/30	CD Submission
ST	2014/06/02	CD Submission

Drawn by	MS
Checked by	DN
Scale	-
Unit	-

DWG. Title

Assembly Phase 4

DWG. No. SO-204

PAGE 252

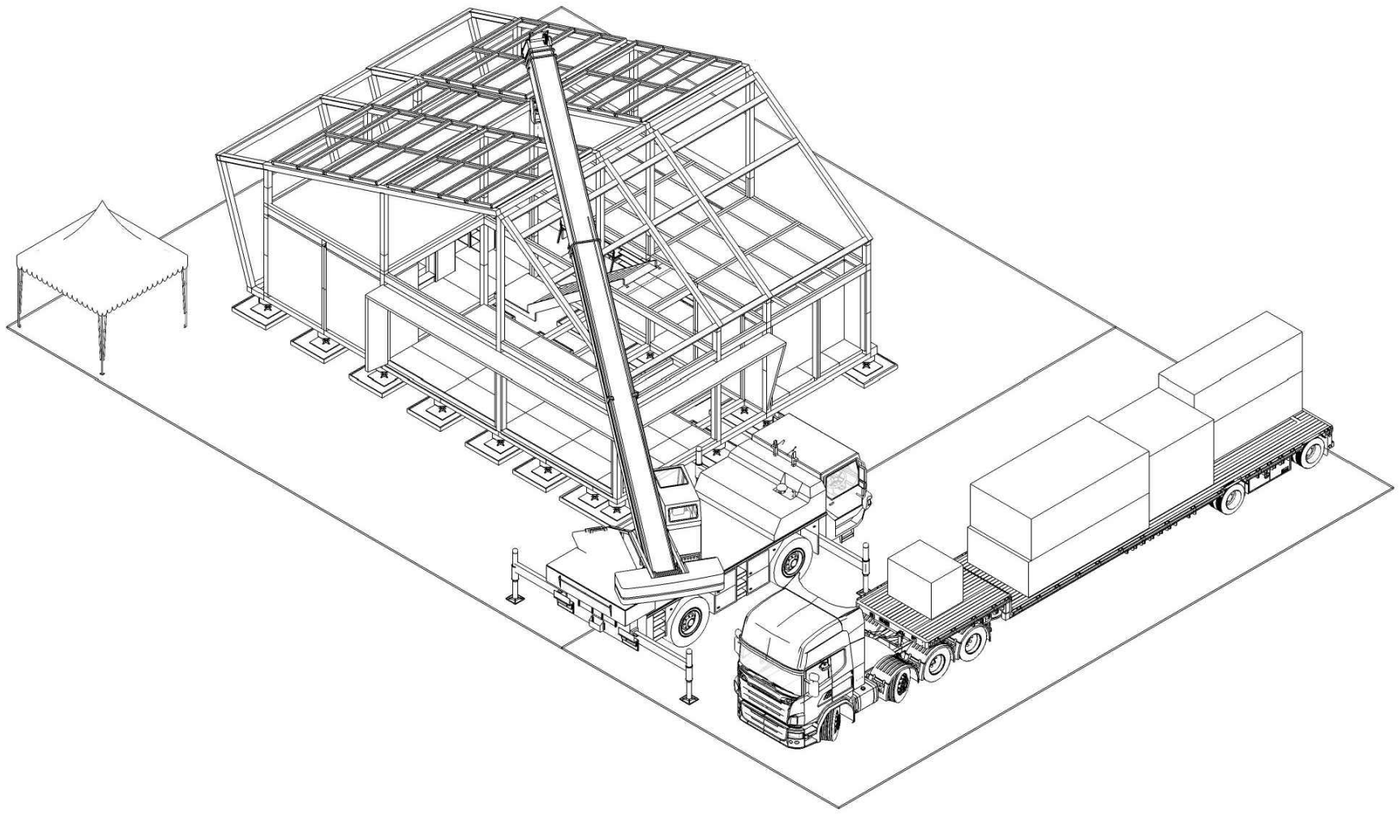

Roof Structure

Step	1	2	3	4	5	6	7	8	9
Work Deatail	2F Main Structure	Roof Unit							
Woker	6	4							
Note									

Solar Decathlon Europe

Project: ORCHID HOUSE

Institution: 國立交通大學 National Chiao Tung University

NCTU Architecture 國立交通大學建築研究所

Team Name: NCTU/UNICODE

Address: 1001 Ta-Hsueh Road
Hsinchu City 30010
Taiwan

Contact: www.sde.tw

Consultants:

Note:

Mark	Date	Description
DN	2013/04/01	SD Submission
DN	2013/07/01	DDc Submission
ST	2013/11/01	DD Submission
ST	2014/03/03	CD Submission
ST	2014/04/30	CD Submission
ST	2014/06/02	CD Submission

Drawn by	MS
Checked by	DN
Scale	-
Unit	-

DWG. Title: Assembly Phase 5

DWG. No. SO-205

PAGE 253

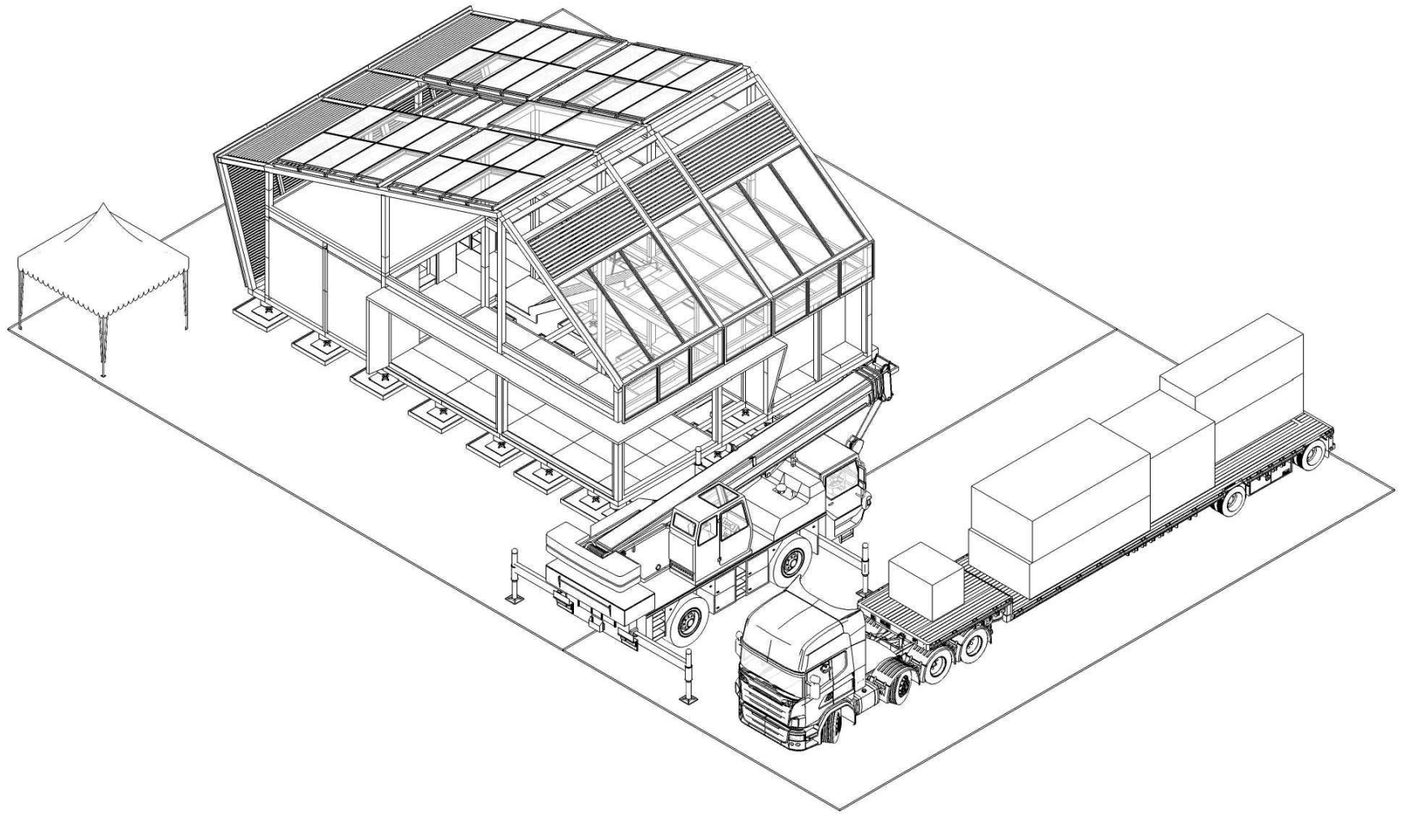

Roof Panel

Step	1	2	3	4	5	6	7	8	9
Work Deatail	Solar Panel & Solar Panel Electricity System	Bayer Roof Panel	Louver Panel						
Woker	6	4	6						
Note									

Solar Decathlon Europe

Project: ORCHID HOUSE

Institution: 國立交通大學 National Chiao Tung University

NCTU Architecture 國立交通大學建築研究所

Team Name: NCTU/UNICODE

Address: 1001 Ta-Hsueh Road
Hsinchu City 30010
Taiwan

Contact: www.sde.tw

Consultants:

Note:

N

Mark	Date	Description
DN	2013/04/01	SD Submission
DN	2013/07/01	DDc Submission
ST	2013/11/01	DD Submission
ST	2014/03/03	CD Submission
ST	2014/04/30	CD Submission
ST	2014/06/02	CD Submission

Drawn by	MS
Checked by	DN
Scale	-
Unit	-

DWG. Title: Assembly Phase 6

DWG. No. SO-206

PAGE 254

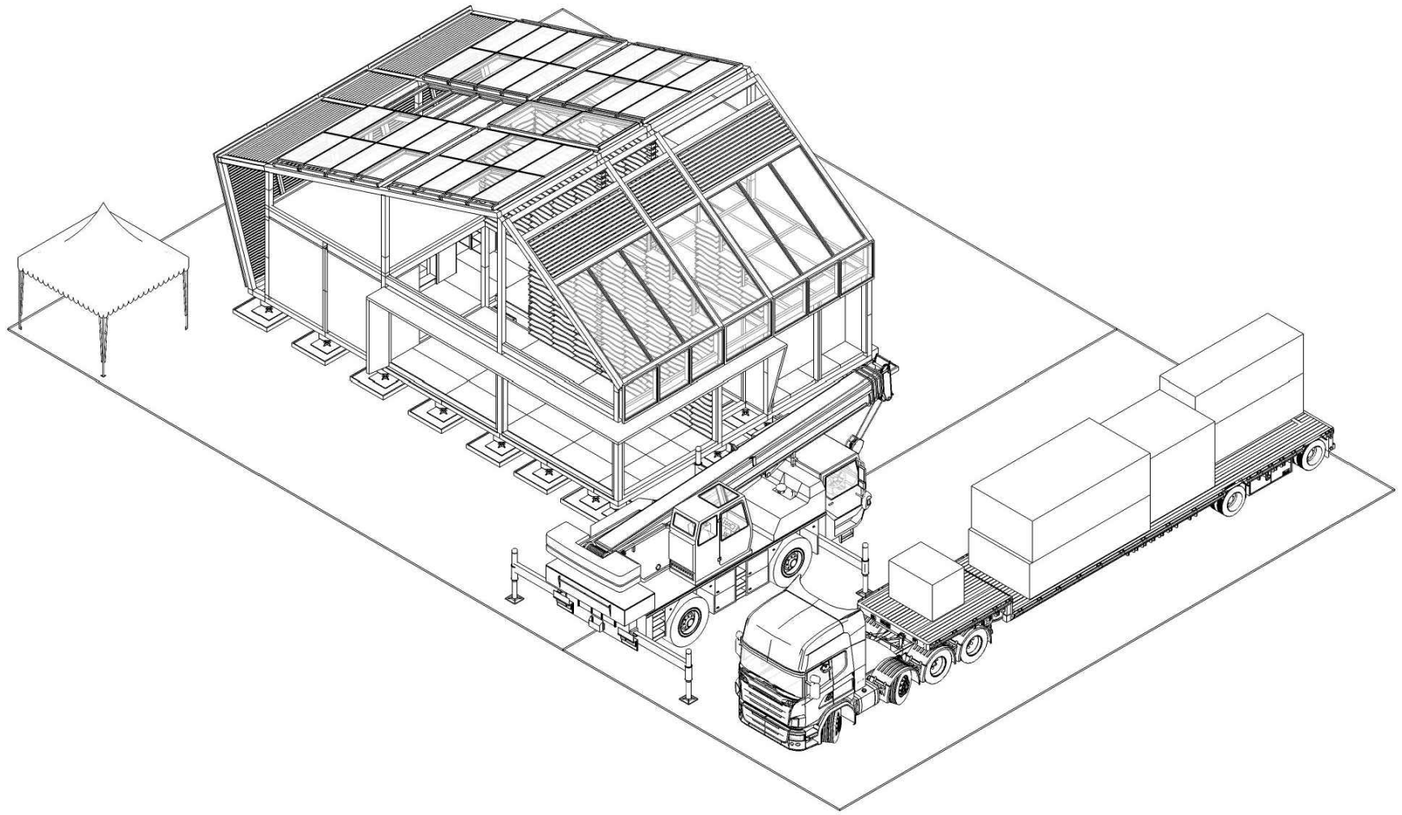

Green Core

Step	1	2	3	4	5	6	7	8	9
Work Deatail	Green Core Structure & Panel & Water System	M.E.P Wiring & Piping System							
Woker	6	4							
Note									

Solar Decathlon Europe

Project:

ORCHID HOUSE

Institution:

國立交通大學 National Chiao Tung University

NCTU Architecture 國立交通大學建築研究所

Team Name: NCTU/UNICODE

Address: 1001 Ta-Hsueh Road Hsinchu City 30010 Taiwan

Contact: www.sde.tw

Consultants:

Note:

N

Mark	Date	Description
DN	2013/04/01	SD Submission
DN	2013/07/01	DDc Submission
ST	2013/11/01	DD Submission
ST	2014/03/03	CD Submission
ST	2014/04/30	CD Submission
ST	2014/06/02	CD Submission

Drawn by: MS

Checked by: DN

Scale: -

Unit: -

DWG. Title: Assembly Phase 7

DWG. No.: SO-207

PAGE: 255

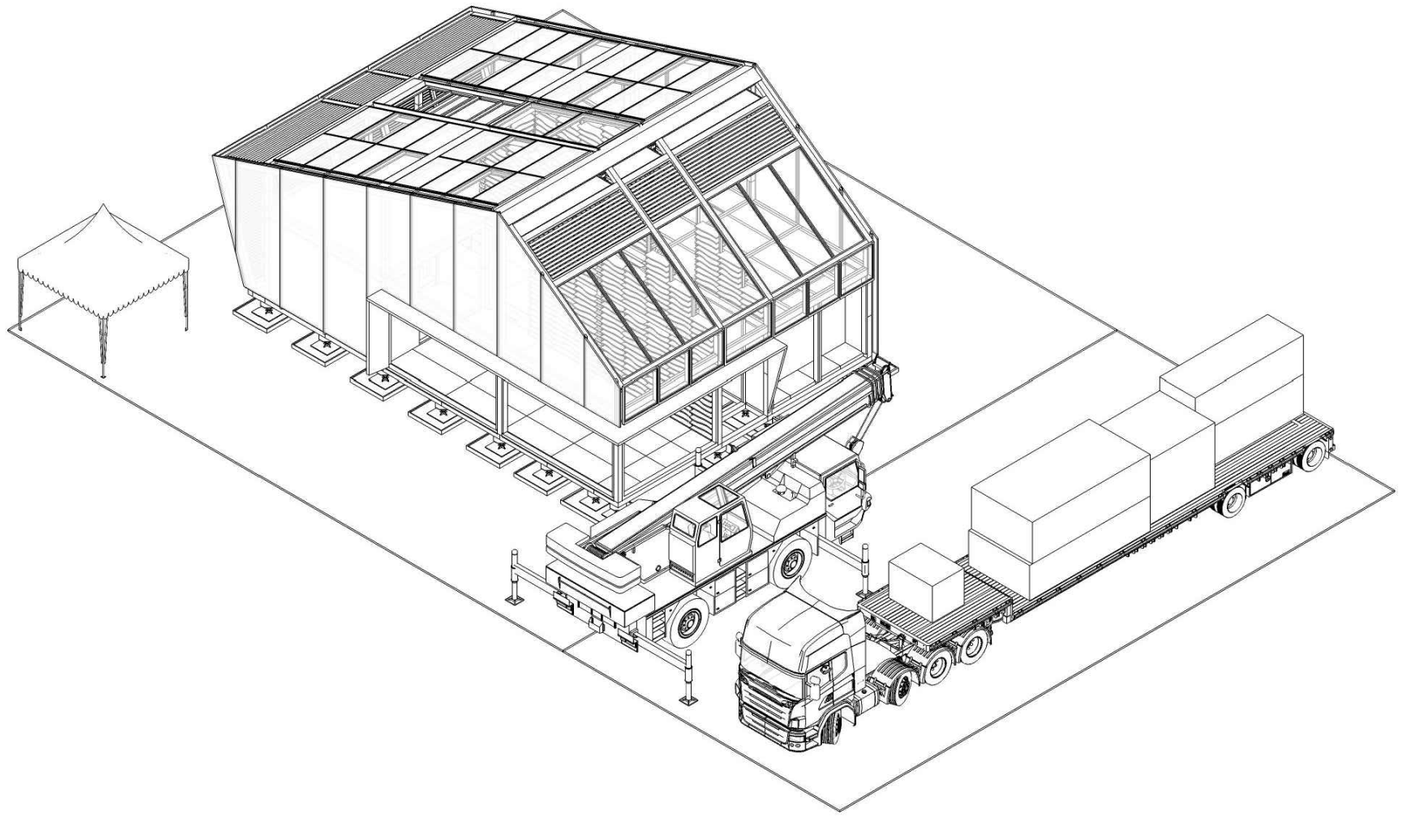

Facade

Step	1	2	3	4	5	6	7	8	9
Work Deatail	Bayer Wall System Structure & Panel	Roof Cover & Gutter System							
Woker	6	6							
Note									

Solar Decathlon Europe

Project:

ORCHID HOUSE

Institution:

國立交通大學 National Chiao Tung University

NCTU Architecture 國立交通大學建築研究所

Team Name: NCTU/UNICODE

Address: 1001 Ta-Hsueh Road
Hsinchu City 30010
Taiwan

Contact: www.sde.tw

Consultants:

Note:

N

Mark	Date	Description
DN	2013/04/01	SD Submission
DN	2013/07/01	DDc Submission
ST	2013/11/01	DD Submission
ST	2014/03/03	CD Submission
ST	2014/04/30	CD Submission
ST	2014/06/02	CD Submission

Drawn by	MS
Checked by	DN
Scale	-
Unit	-

DWG. Title

Assembly Phase 8

DWG. No. SO-208

PAGE 256

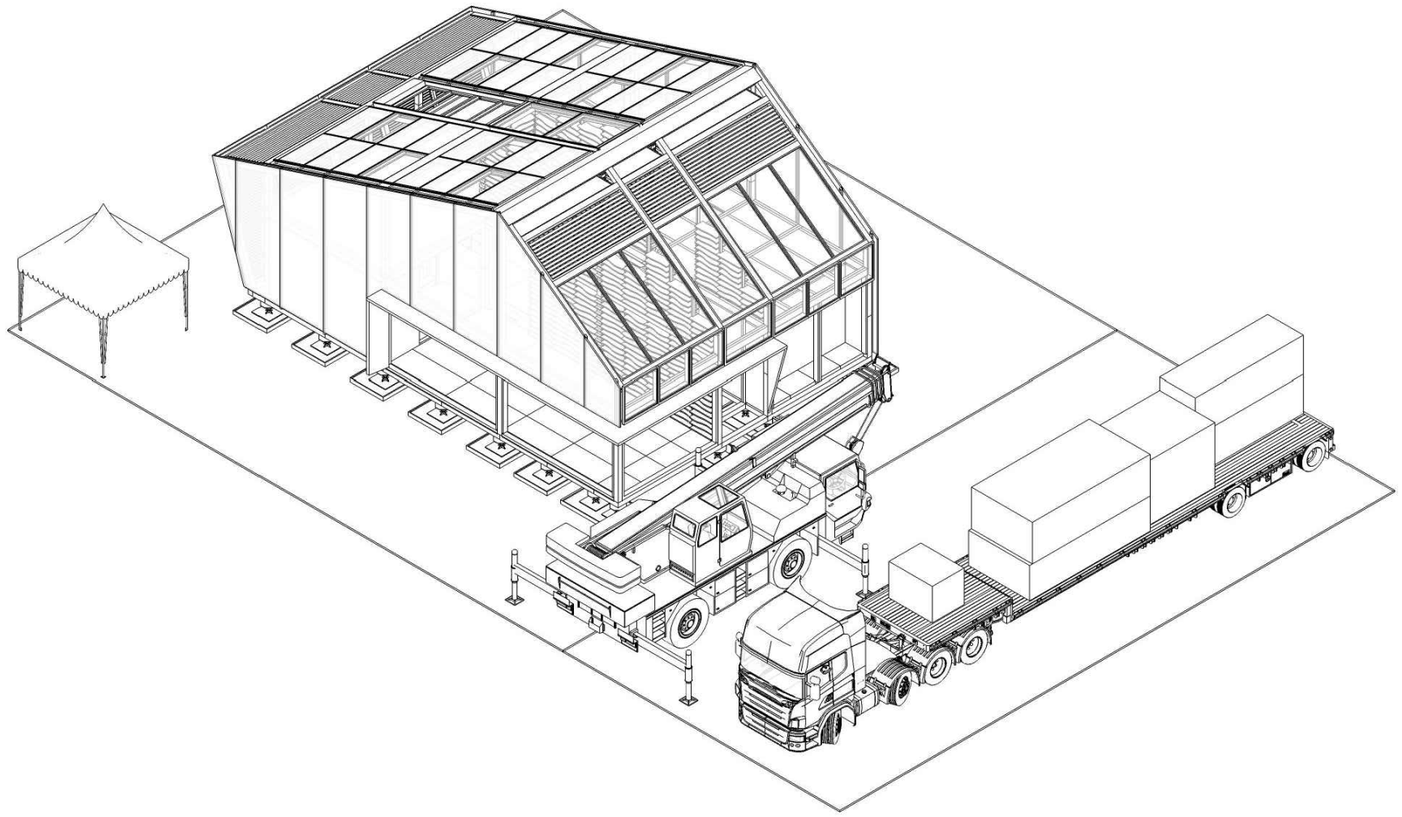

Waterproof

Step	1	2	3	4	5	6	7	8	9
Work Deatail	Roof Waterproof	Equipment & Lighting Test							
Woker	6	6							
Note									

Solar Decathlon Europe

Project:

ORCHID HOUSE

Institution:

國立交通大學 National Chiao Tung University

NCTU Architecture 國立交通大學建築研究所

Team Name: NCTU/UNICODE

Address: 1001 Ta-Hsueh Road
Hsinchu City 30010
Taiwan

Contact: www.sde.tw

Consultants:

Note:

Mark	Date	Description
DN	2013/04/01	SD Submission
DN	2013/07/01	DDc Submission
ST	2013/11/01	DD Submission
ST	2014/03/03	CD Submission
ST	2014/04/30	CD Submission
ST	2014/06/02	CD Submission

Drawn by: MS

Checked by: DN

Scale: -

Unit: -

DWG. Title: Assembly Phase 9

DWG. No.: SO-209

PAGE: 257

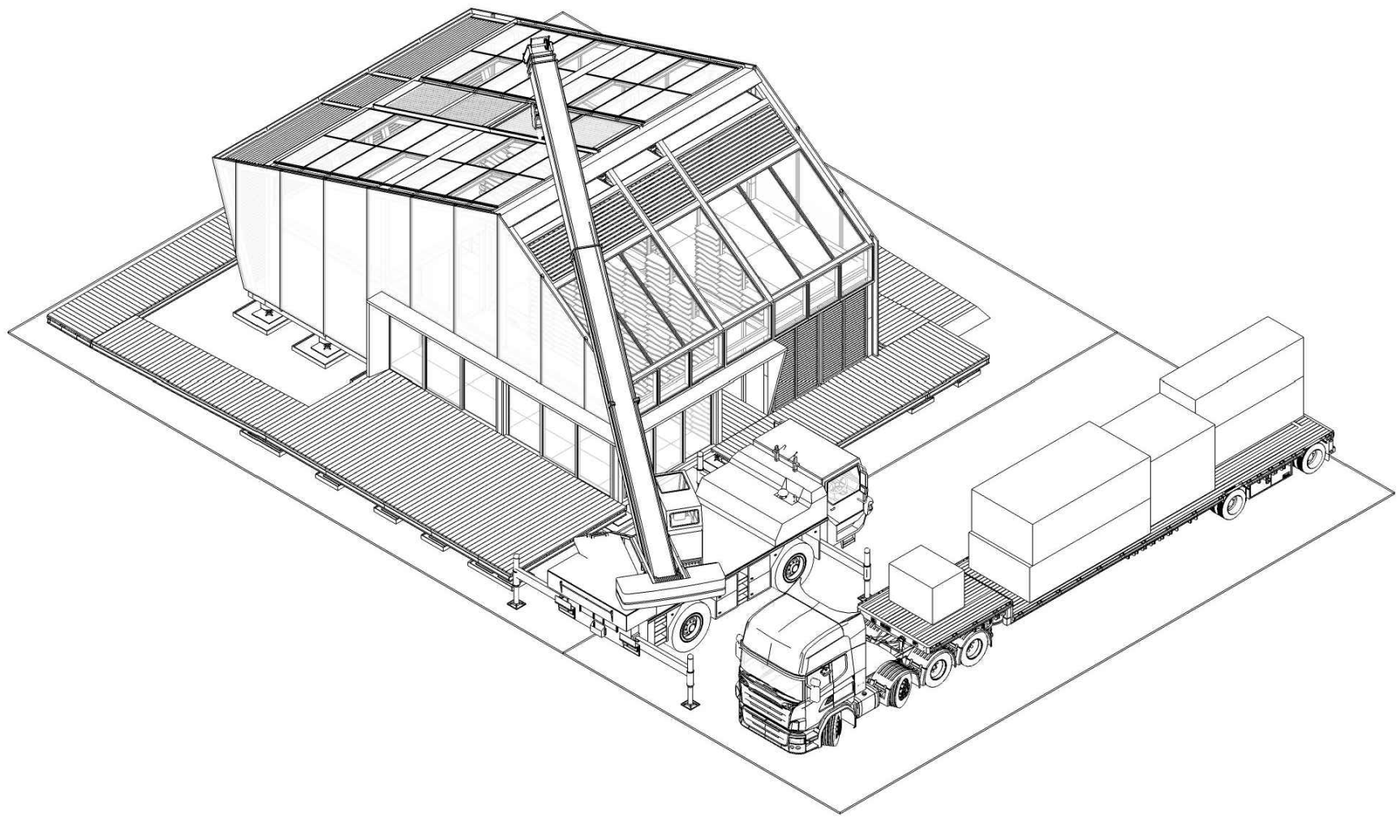

Furnishing and Planting

Step	1	2	3	4	5	6	7	8	9
Work Deatail	Outdoor Terrace Structure & Handrail & LIghting	Outdoor Planting & Green Core Planting	Furniture	Appliances	System Test	Lot Clean			
Woker	6	6	6	6	6	6			
Note									

Solar Decathlon Europe

Project:

ORCHID HOUSE

Institution:

國立交通大學 National Chiao Tung University

NCTU Architecture 國立交通大學建築研究所

Team Name: NCTU/UNICODE

Address: 1001 Ta-Hsueh Road
Hsinchu City 30010
Taiwan

Contact: www.sde.tw

Consultants:

Note:

N

Mark	Date	Description
DN	2013/04/01	SD Submission
DN	2013/07/01	DDc Submission
ST	2013/11/01	DD Submission
ST	2014/03/03	CD Submission
ST	2014/04/30	CD Submission
ST	2014/06/02	CD Submission

Drawn by: MS

Checked by: DN

Scale: -

Unit: -

DWG. Title: Assembly Phase 10

DWG. No.: SO-210

PAGE: 258

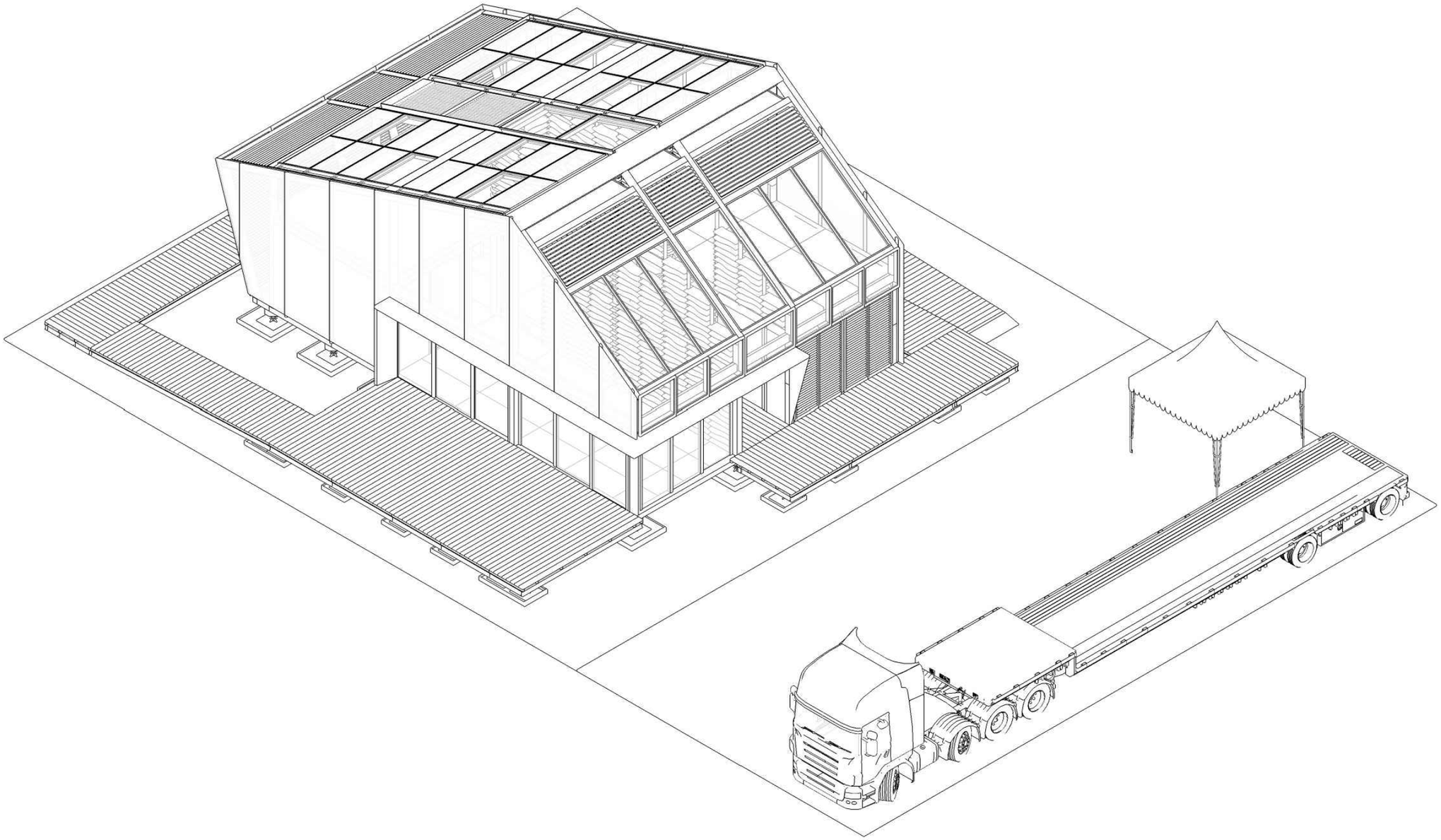

Furnishing and Planting

Step	1	2	3	4	5	6	7			
Work detail	Plants removing	accessory removing	Furniture removing	Kitchen/Appliance/Lamp equipment	Machinery room	Outside pipeline/Lamps	Outside handrail			
Worker	6	4	6	4	2	4	4			
Note										

Solar Decathlon Europe

Project:

ORCHID HOUSE

Institution:

國立交通大學 National Chiao Tung University

NCTU Architecture 國立交通大學建築研究所

Team Name: NCTU/UNICODE

Address: 1001 Ta-Hsueh Road
Hsinchu City 30010
Taiwan

Contact: www.sde.tw

Consultants:

Note:

N

Mark	Date	Description
DN	2013/04/01	SD Submission
DN	2013/07/01	DDc Submission
ST	2013/11/01	DD Submission
ST	2014/03/03	CD Submission
ST	2014/04/30	CD Submission
ST	2014/06/02	CD Submission

Drawn by: SC

Checked by: -

Scale: -

Unit: -

DWG. Title: Disassembly Phase 1

DWG. No.: SO-301

PAGE: 259

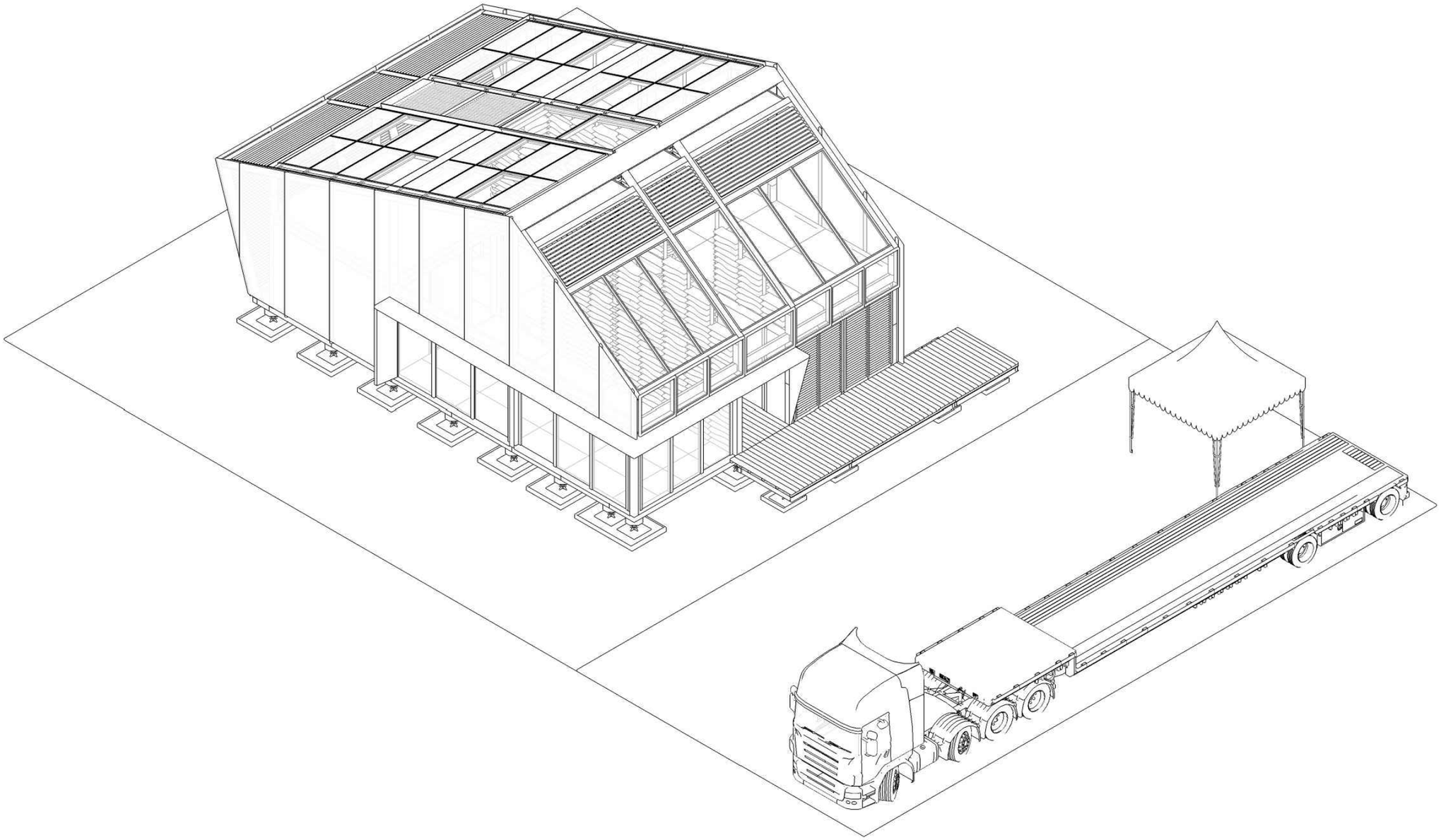

Outdoor Deck Units

Step	1	2	3	4						
Work detail	Outside WPC/deck	Outside footing	East/West Bayer board	South Eletric Blinds						
Worker	6	2	5	3						
Note										

Solar Decathlon Europe

Project: ORCHID HOUSE

Institution: 國立交通大學 National Chiao Tung University

NCTU Architecture 國立交通大學建築研究所

Team Name: NCTU/UNICODE

Address: 1001 Ta-Hsueh Road
Hsinchu City 30010
Taiwan

Contact: www.sde.tw

Consultants:

Note:

N

Mark	Date	Description
DN	2013/04/01	SD Submission
DN	2013/07/01	DDc Submission
ST	2013/11/01	DD Submission
ST	2014/03/03	CD Submission
ST	2014/04/30	CD Submission
ST	2014/06/02	CD Submission

Drawn by	SC
Checked by	-
Scale	-
Unit	-

DWG. Title: Disassembly Phase 2

DWG. No.: SO-302

PAGE: 260

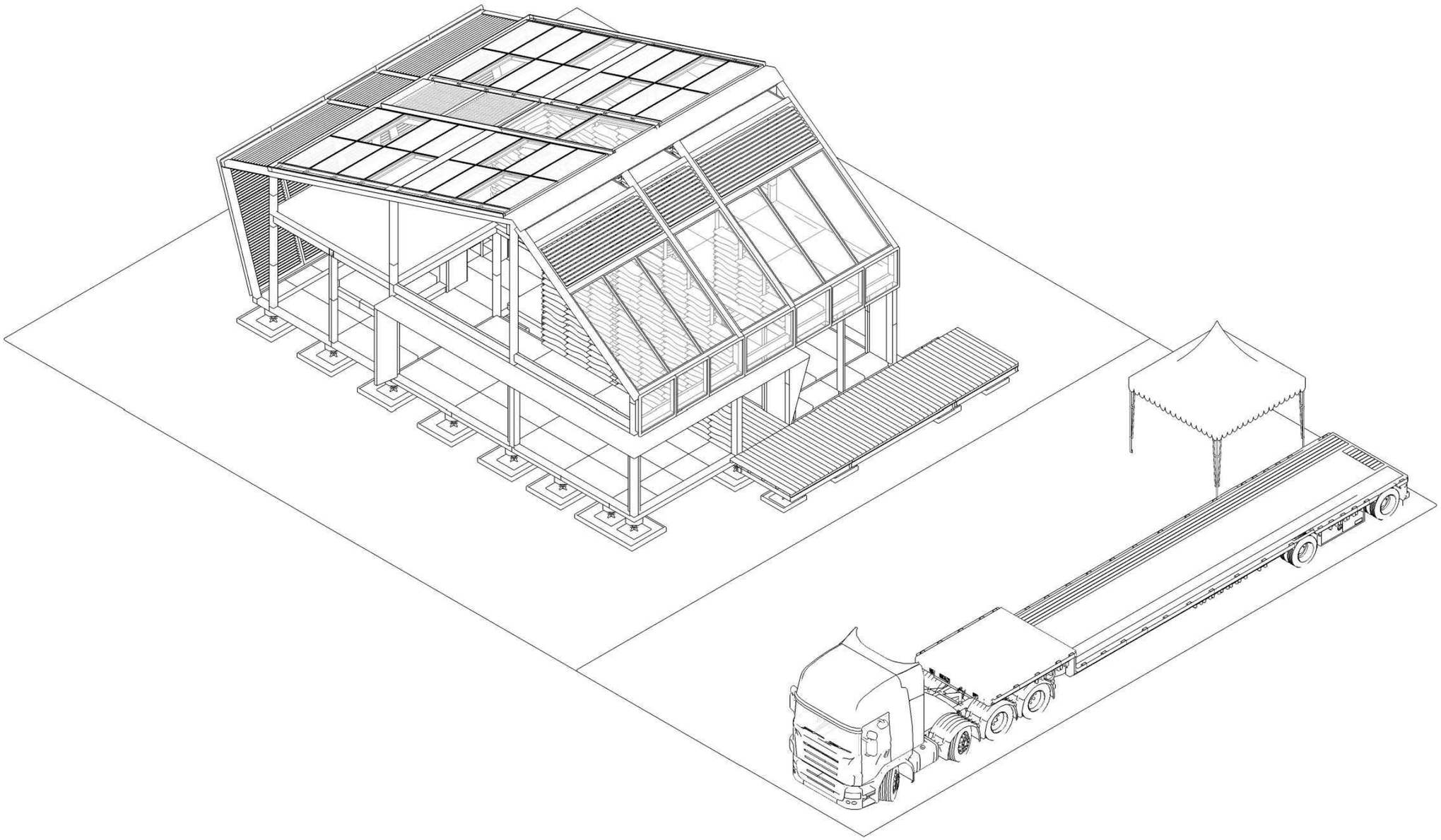

Ground Floor

Step	1	2	3	4	5	6	7	8	9	
Work detail	1F Interior floor	Aluminium window	Sensor removing	1F Ceiling	1F Wooden wall	Bathroom	Kitchen Island	Work Station removing	Thermal wall removing	
Worker	4	2	2	4	6	4	3	4	4	
Note										

Solar Decathlon Europe

Project: ORCHID HOUSE

Institution: 國立交通大學 National Chiao Tung University

NCTU Architecture 國立交通大學建築研究所

Team Name: NCTU/UNICODE

Address: 1001 Ta-Hsueh Road
Hsinchu City 30010
Taiwan

Contact: www.sde.tw

Consultants:

Note:

Mark	Date	Description
DN	2013/04/01	SD Submission
DN	2013/07/01	DDc Submission
ST	2013/11/01	DD Submission
ST	2014/03/03	CD Submission
ST	2014/04/30	CD Submission
ST	2014/06/02	CD Submission

Drawn by	SC
Checked by	-
Scale	-
Unit	-

DWG. Title: Disassembly Phase 3

DWG. No. SO-303

PAGE 261

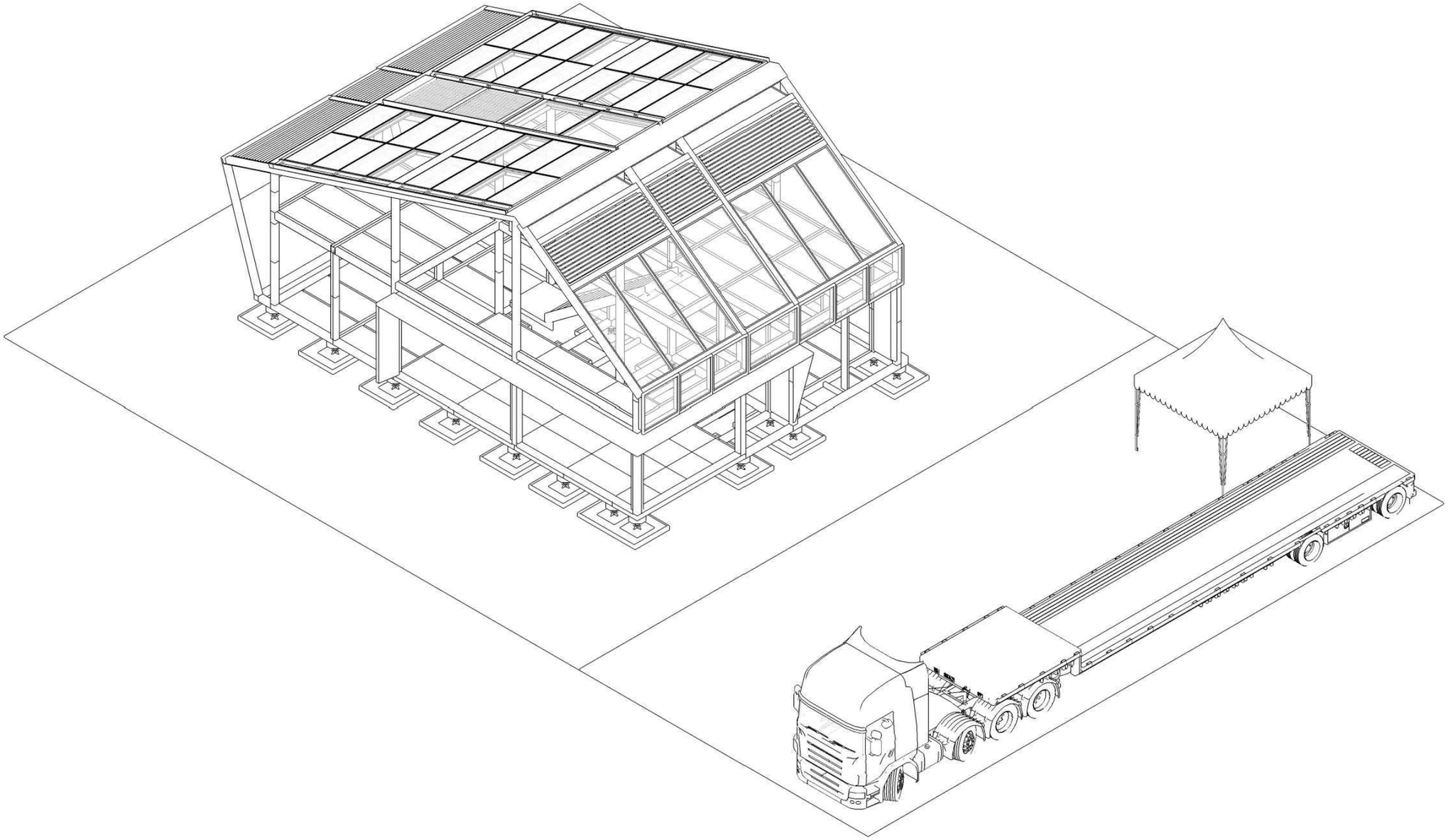

Mezzanine Floor

Step	1	2	3	4	5	6	7	8	9	
Work detail	2F WPC	2F Equipment/Appliance	Water wall removing	2F pipline	Green core	1F Upper wooden box	2F Upper wooden box	Window/Door disassembly	Tea terrance/Entrance WPC	
Worker	3	5	8	4	4	6	6	4	8	
Note										

Solar Decathlon Europe

Project: ORCHID HOUSE

Institution: 國立交通大學 National Chiao Tung University

NCTU Architecture 國立交通大學建築研究所

Team Name: NCTU/UNICODE

Address: 1001 Ta-Hsueh Road
Hsinchu City 30010
Taiwan

Contact: www.sde.tw

Consultants:

Note:

N

Mark	Date	Description
DN	2013/04/01	SD Submission
DN	2013/07/01	DDc Submission
ST	2013/11/01	DD Submission
ST	2014/03/03	CD Submission
ST	2014/04/30	CD Submission
ST	2014/06/02	CD Submission

Drawn by	SC
Checked by	-
Scale	-
Unit	-

DWG. Title: Disassembly Phase 4

DWG. No. SO-304

PAGE 262

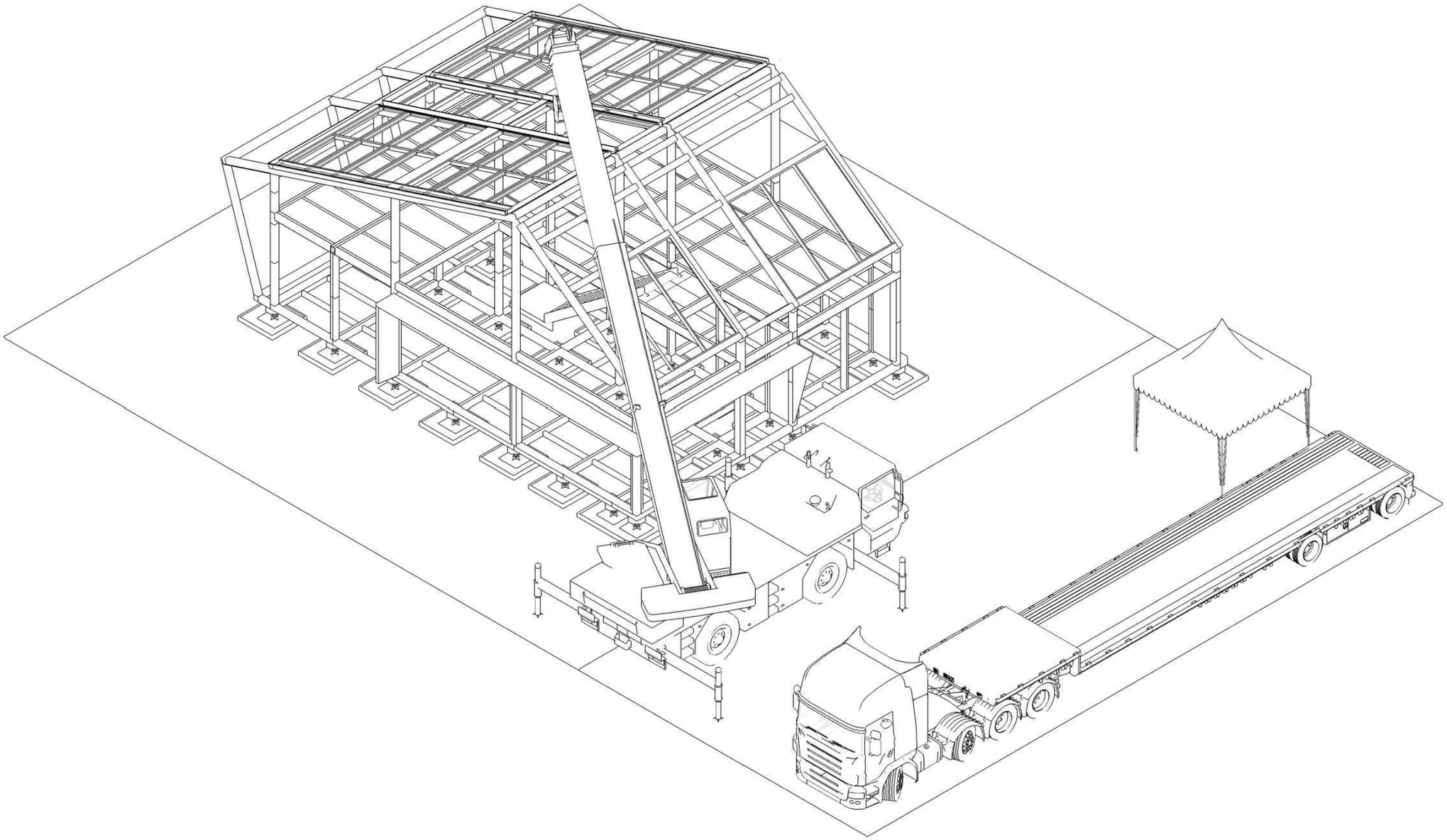

Roof Panels

Step	1	2	3	4	5	6	7	8		
Work detail	Roof cover board	North Bayer board	Roof ridge Fans	Smart skin	Solar panel	North Eletric Blinds	Solar water heater	Water tank		
Worker	4	3	4	3	3	4	2	6		
Note										

Solar Decathlon Europe

Project: ORCHID HOUSE

Institution: 國立交通大學 National Chiao Tung University

NCTU Architecture 國立交通大學建築研究所

Team Name: NCTU/UNICODE

Address: 1001 Ta-Hsueh Road
Hsinchu City 30010
Taiwan

Contact: www.sde.tw

Consultants:

Note:

Mark	Date	Description
DN	2013/04/01	SD Submission
DN	2013/07/01	DDc Submission
ST	2013/11/01	DD Submission
ST	2014/03/03	CD Submission
ST	2014/04/30	CD Submission
ST	2014/06/02	CD Submission

Drawn by: SC

Checked by: -

Scale: -

Unit: -

DWG. Title: Disassembly Phase 5

DWG. No.: SO-305

PAGE: 263

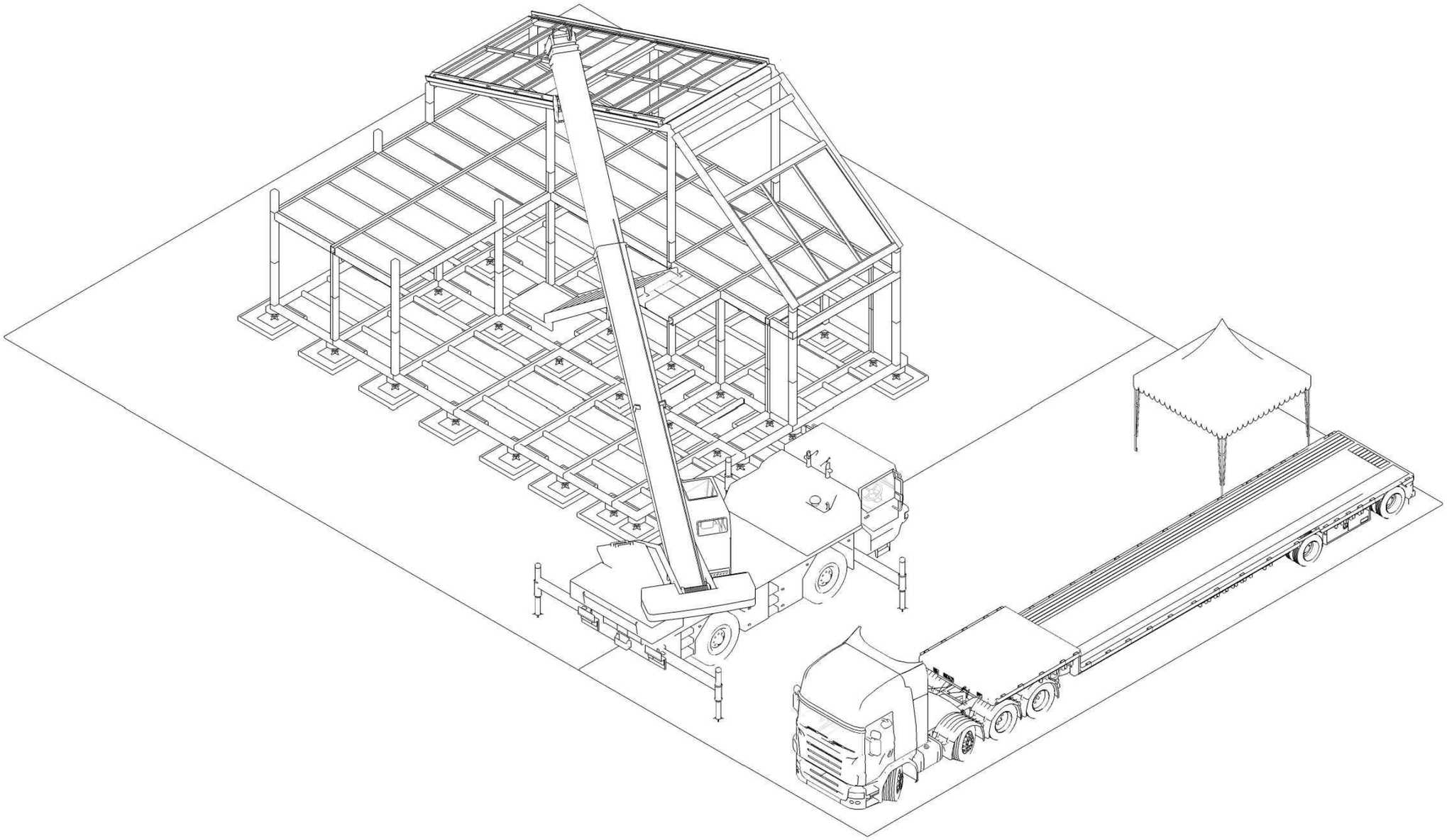

East Roof Structure

Step	1	2	3	4						
Work detail	E1,E2,E3,E4 unit disassembly	Roof Unit 5~7 disassembly	Roof Unit 9~11 disassembly	East column						
Worker	5	3	4	3						
Note										

Solar Decathlon Europe

Project: ORCHID HOUSE

Institution: 國立交通大學 National Chiao Tung University

NCTU Architecture 國立交通大學建築研究所

Team Name: NCTU/UNICODE

Address: 1001 Ta-Hsueh Road
Hsinchu City 30010
Taiwan

Contact: www.sde.tw

Consultants:

Note:

Mark	Date	Description
DN	2013/04/01	SD Submission
DN	2013/07/01	DDc Submission
ST	2013/11/01	DD Submission
ST	2014/03/03	CD Submission
ST	2014/04/30	CD Submission
ST	2014/06/02	CD Submission

Drawn by: SC

Checked by: -

Scale: -

Unit: -

DWG. Title: Disassembly Phase 6

DWG. No.: SO-306

PAGE: 264

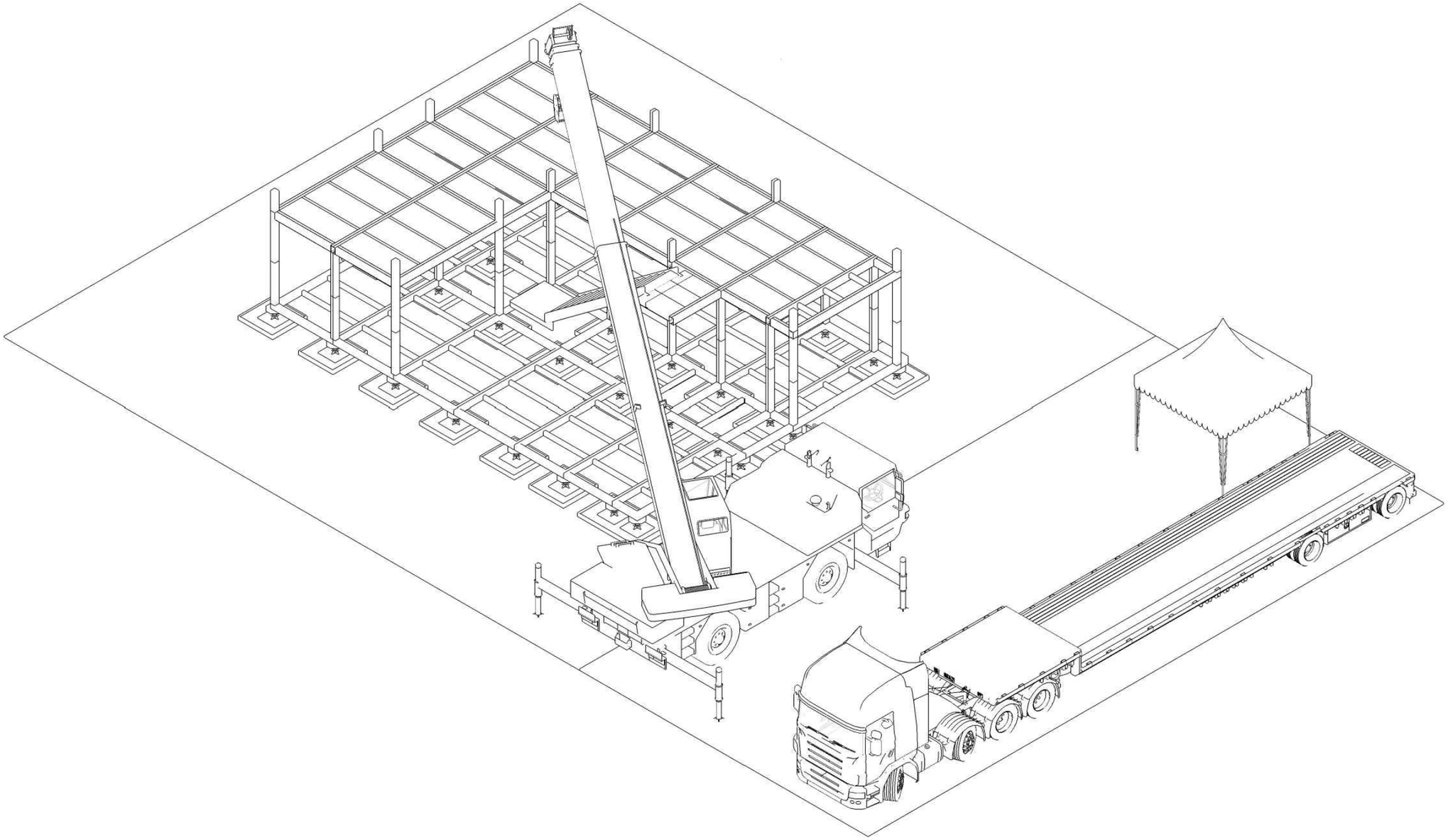

West Roof Structure

Step	1	2	3	4	5					
Work detail	Roof Unit 1~3 removing	2F unit disassemby	Roof Unit 9~11 disassembly	West column	East/North canopy					
Worker	4	6	4	3	6					
Note										

Solar Decathlon Europe

Project: ORCHID HOUSE

Institution: 國立交通大學 National Chiao Tung University

NCTU Architecture 國立交通大學建築研究所

Team Name: NCTU/UNICODE

Address: 1001 Ta-Hsueh Road
Hsinchu City 30010
Taiwan

Contact: www.sde.tw

Consultants:

Note:

Mark	Date	Description
DN	2013/04/01	SD Submission
DN	2013/07/01	DDc Submission
ST	2013/11/01	DD Submission
ST	2014/03/03	CD Submission
ST	2014/04/30	CD Submission
ST	2014/06/02	CD Submission

Drawn by: SC

Checked by: -

Scale: -

Unit: -

DWG. Title: Disassembly Phase 7

DWG. No.: SO-307

PAGE: 265

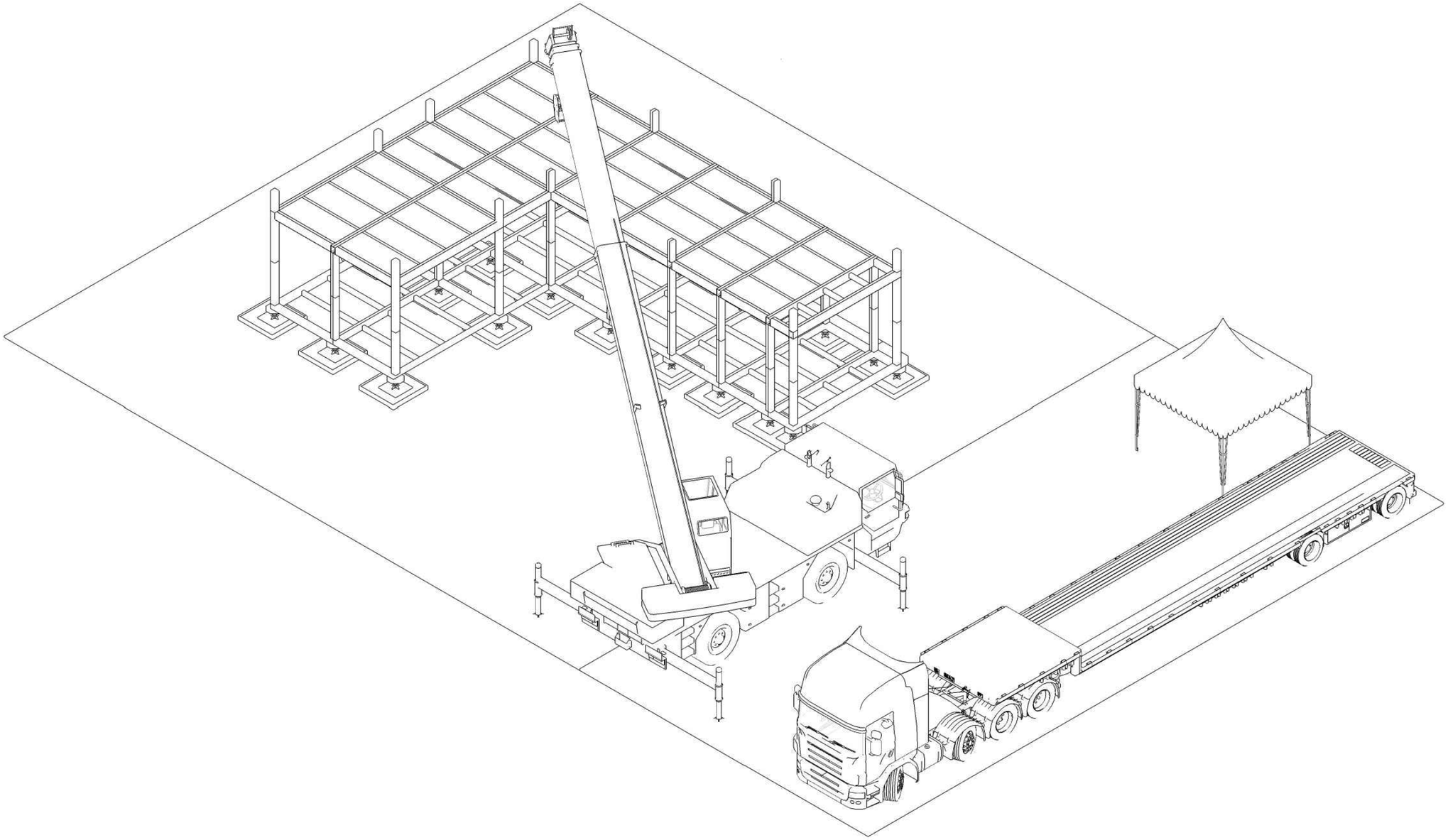

Tea Terrance Units

Step	1	2								
Work detail	Unit 6~10 disassembly	Tea terrance footing								
Worker	4	4								
Note										

Solar Decathlon Europe

Project:

ORCHID HOUSE

Institution:

國立交通大學 National Chiao Tung University

NCTU Architecture 國立交通大學建築研究所

Team Name: NCTU/UNICODE

Address: 1001 Ta-Hsueh Road
Hsinchu City 30010
Taiwan

Contact: www.sde.tw

Consultants:

Note:

N

Mark	Date	Description
DN	2013/04/01	SD Submission
DN	2013/07/01	DDc Submission
ST	2013/11/01	DD Submission
ST	2014/03/03	CD Submission
ST	2014/04/30	CD Submission
ST	2014/06/02	CD Submission

Drawn by: SC

Checked by: -

Scale: -

Unit: -

DWG. Title: Disassembly Phase 8

DWG. No.: SO-308

PAGE: 266

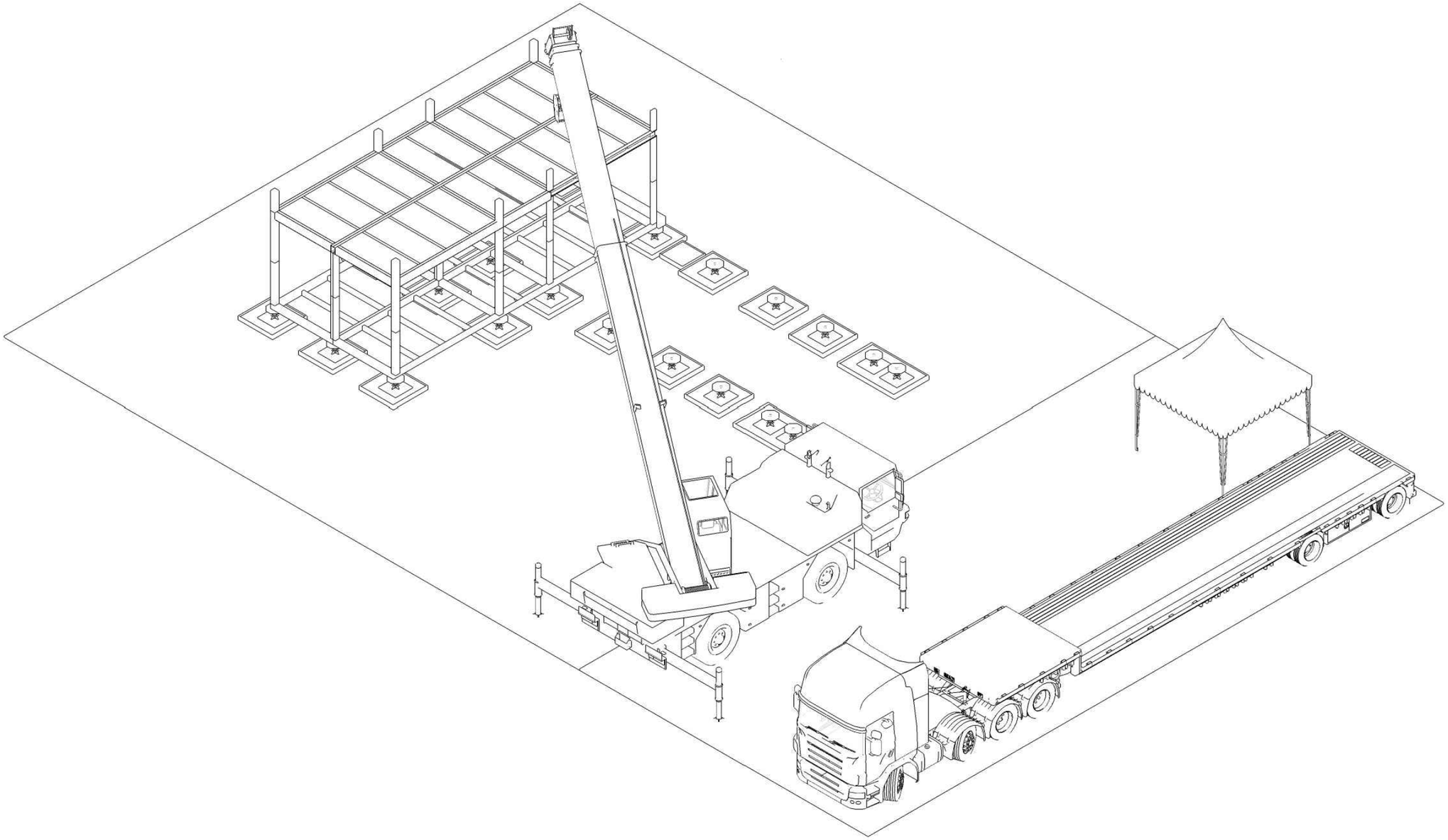

Box Units

Step	1	2								
Work detail	Unit 1~5 disassembly	Unit 1~5 removing								
Worker	6	4								
Note										

Solar Decathlon Europe

Project: ORCHID HOUSE

Institution: 國立交通大學 National Chiao Tung University

NCTU Architecture 國立交通大學建築研究所

Team Name: NCTU/UNICODE

Address: 1001 Ta-Hsueh Road
Hsinchu City 30010
Taiwan

Contact: www.sde.tw

Consultants:

Note:

N

Mark	Date	Description
DN	2013/04/01	SD Submission
DN	2013/07/01	DDc Submission
ST	2013/11/01	DD Submission
ST	2014/03/03	CD Submission
ST	2014/04/30	CD Submission
ST	2014/06/02	CD Submission

Drawn by: SC

Checked by: -

Scale: -

Unit: -

DWG. Title: Disassembly Phase 9

DWG. No.: SO-309

PAGE: 267

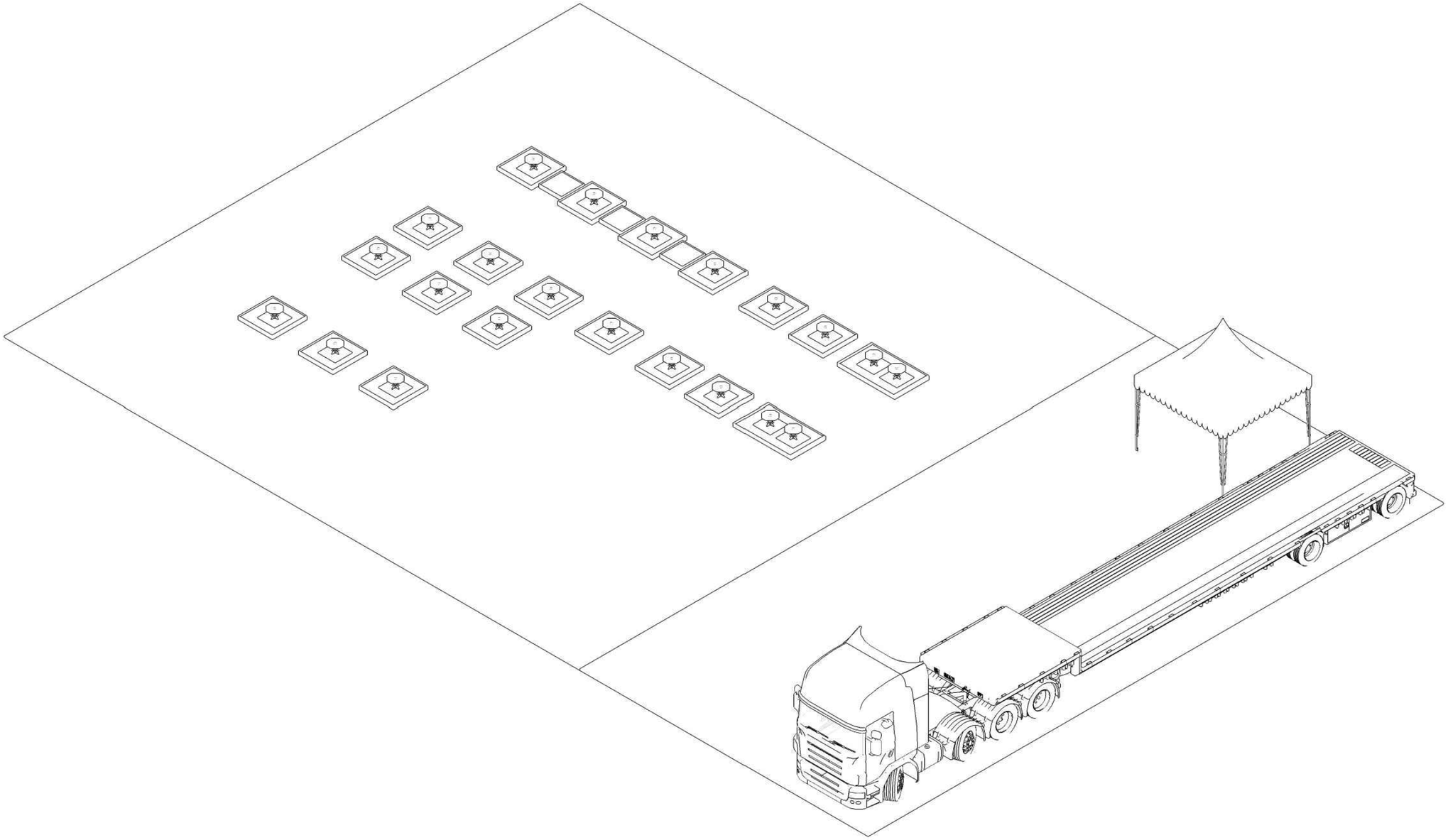

Footing

Step	1	2	3	4						
Work detail	Unit 11~12 disassembly	Unit 11~12 removing	Footing removing	Site cleaning						
Worker	6	4	6	10						
Note										

Solar Decathlon Europe

Project: ORCHID HOUSE

Institution: 國立交通大學 National Chiao Tung University

NCTU Architecture 國立交通大學建築研究所

Team Name: NCTU/UNICODE

Address: 1001 Ta-Hsueh Road
Hsinchu City 30010
Taiwan

Contact: www.sde.tw

Consultants:

Note:

N

Mark	Date	Description
DN	2013/04/01	SD Submission
DN	2013/07/01	DDc Submission
ST	2013/11/01	DD Submission
ST	2014/03/03	CD Submission
ST	2014/04/30	CD Submission
ST	2014/06/02	CD Submission

Drawn by	SC
Checked by	-
Scale	-
Unit	-

DWG. Title: Disassembly Phase 10

DWG. No. SO-310

PAGE 268

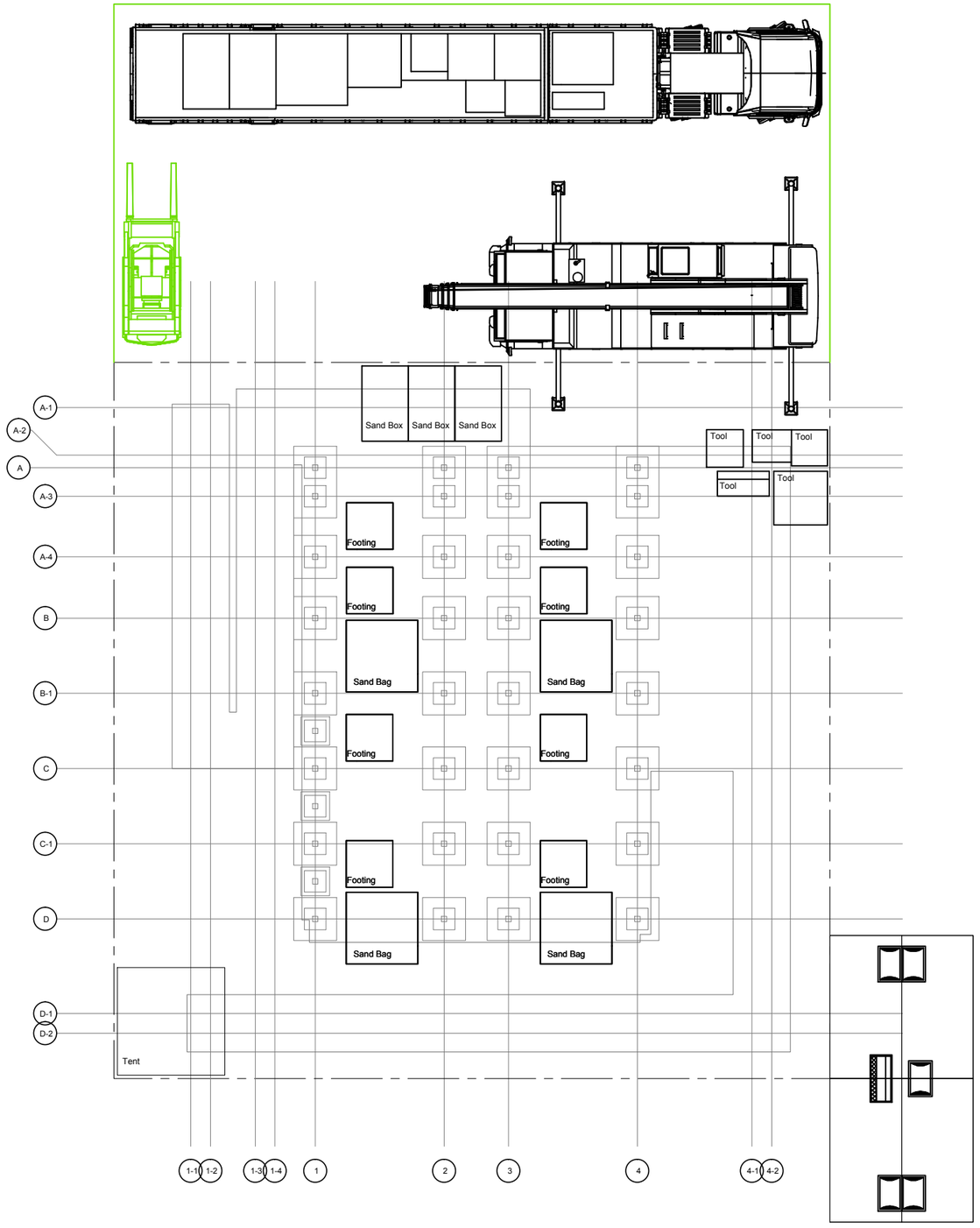

0 1 2 5 METER

Solar Decathlon Europe

Project: ORCHID HOUSE

Institution: 國立交通大學 National Chiao Tung University

NCTU Architecture 國立交通大學建築研究所

Team Name: NCTU/UNICODE

Address: 1001 Ta-Hsueh Road
Hsinchu City 30010
Taiwan

Contact: www.sde.tw

Consultants:

Note:

Mark	Date	Description
DN	2013/04/01	SD Submission
DN	2013/07/01	DDc Submission
ST	2013/11/01	DD Submission
ST	2014/03/03	CD Submission
ST	2014/04/30	CD Submission
ST	2014/06/02	CD Submission

Drawn by	MS
Checked by	BT
Scale	1:100
Unit	mm

DWG. Title

ASSEMBLY LOT PLAN
TRUCK 01

DWG. No. SO-401

PAGE 269

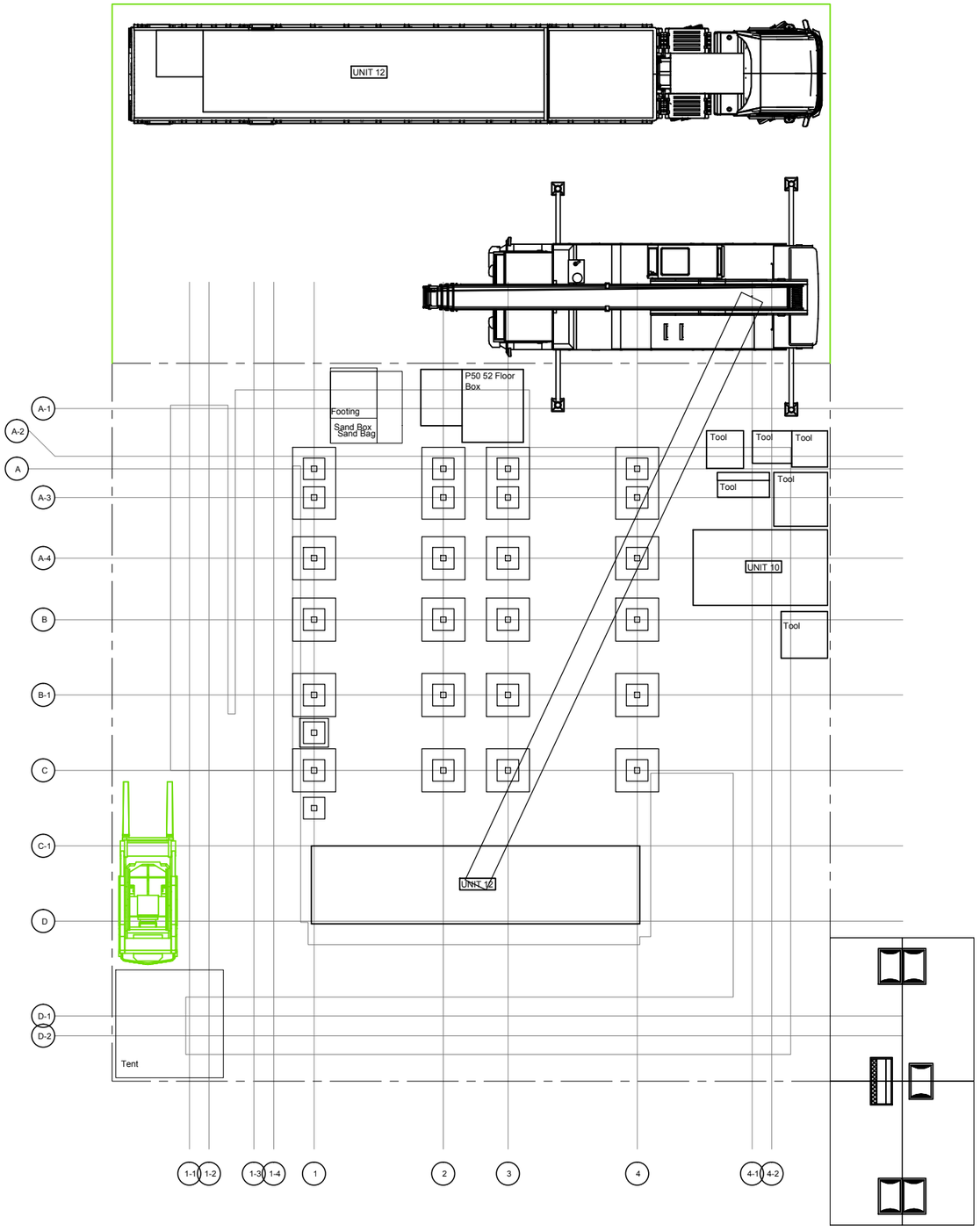

0 1 2 5 METER

Solar Decathlon Europe

Project:

ORCHID HOUSE

Institution:

國立交通大學 National Chiao Tung University

NCTU Architecture 國立交通大學建築研究所

Team Name:	NCTU/UNICODE
Address:	1001 Ta-Hsueh Road Hsinchu City 30010 Taiwan
Contact:	www.sde.tw

Consultants:

Note:

Mark	Date	Description
DN	2013/04/01	SD Submission
DN	2013/07/01	DDc Submission
ST	2013/11/01	DD Submission
ST	2014/03/03	CD Submission
ST	2014/04/30	CD Submission
ST	2014/06/02	CD Submission

Drawn by	MS
Checked by	BT
Scale	1:100
Unit	mm

DWG. Title

ASSEMBLY LOT PLAN
TRUCK 02

DWG. No. SO-402

PAGE 270

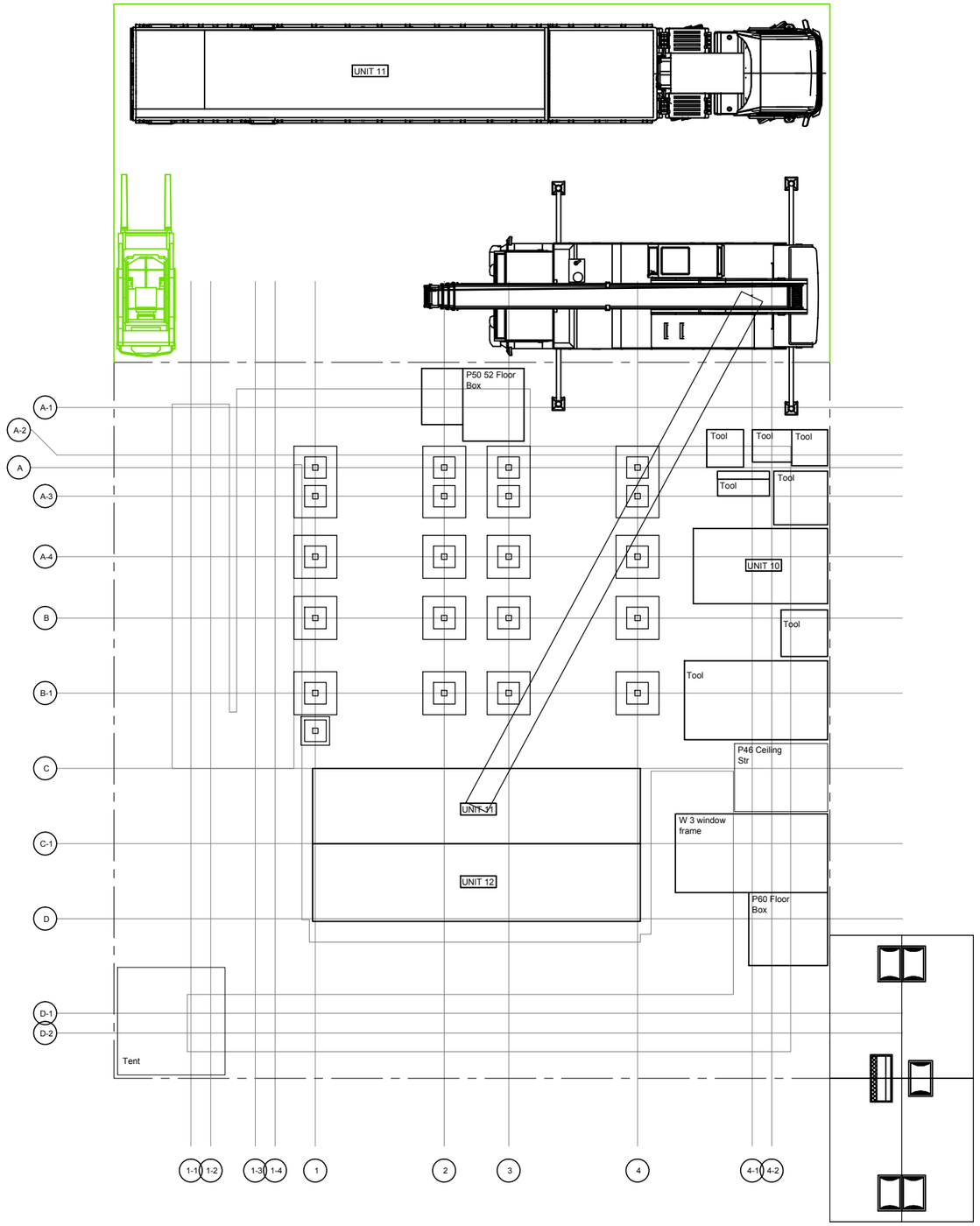

0 1 2 5 METER

Solar Decathlon Europe

Project: ORCHID HOUSE

Institution: 國立交通大學 National Chiao Tung University

NCTU Architecture 國立交通大學建築研究所

Team Name: NCTU/UNICODE

Address: 1001 Ta-Hsueh Road
Hsinchu City 30010
Taiwan

Contact: www.sde.tw

Consultants:

Note:

Mark	Date	Description
DN	2013/04/01	SD Submission
DN	2013/07/01	DDc Submission
ST	2013/11/01	DD Submission
ST	2014/03/03	CD Submission
ST	2014/04/30	CD Submission
ST	2014/06/02	CD Submission

Drawn by	MS
Checked by	BT
Scale	1:100
Unit	mm

DWG. Title

ASSEMBLY LOT PLAN
TRUCK 03

DWG. No. SO-403

PAGE 271

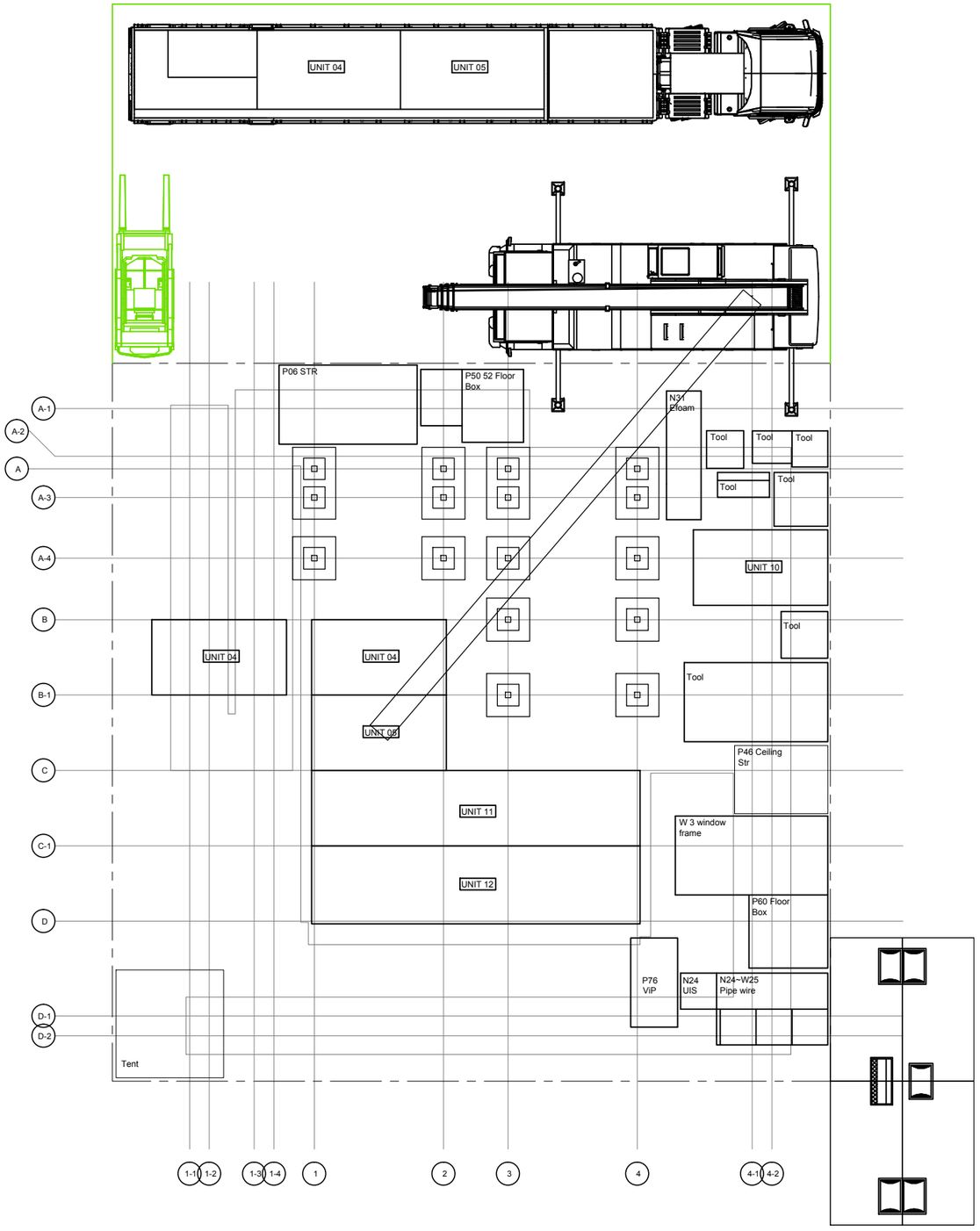

0 1 2 5 METER

Solar Decathlon Europe

Project:

ORCHID HOUSE

Institution:

國立交通大學 National Chiao Tung University

NCTU Architecture 國立交通大學建築研究所

Team Name:	NCTU/UNICODE
Address:	1001 Ta-Hsueh Road Hsinchu City 30010 Taiwan
Contact:	www.sde.tw

Consultants:

Note:

Mark	Date	Description
DN	2013/04/01	SD Submission
DN	2013/07/01	DDc Submission
ST	2013/11/01	DD Submission
ST	2014/03/03	CD Submission
ST	2014/04/30	CD Submission
ST	2014/06/02	CD Submission

Drawn by	MS
Checked by	BT
Scale	1:100
Unit	mm

DWG. Title

ASSEMBLY LOT PLAN
TRUCK 04

DWG. No. SO-404

PAGE 272

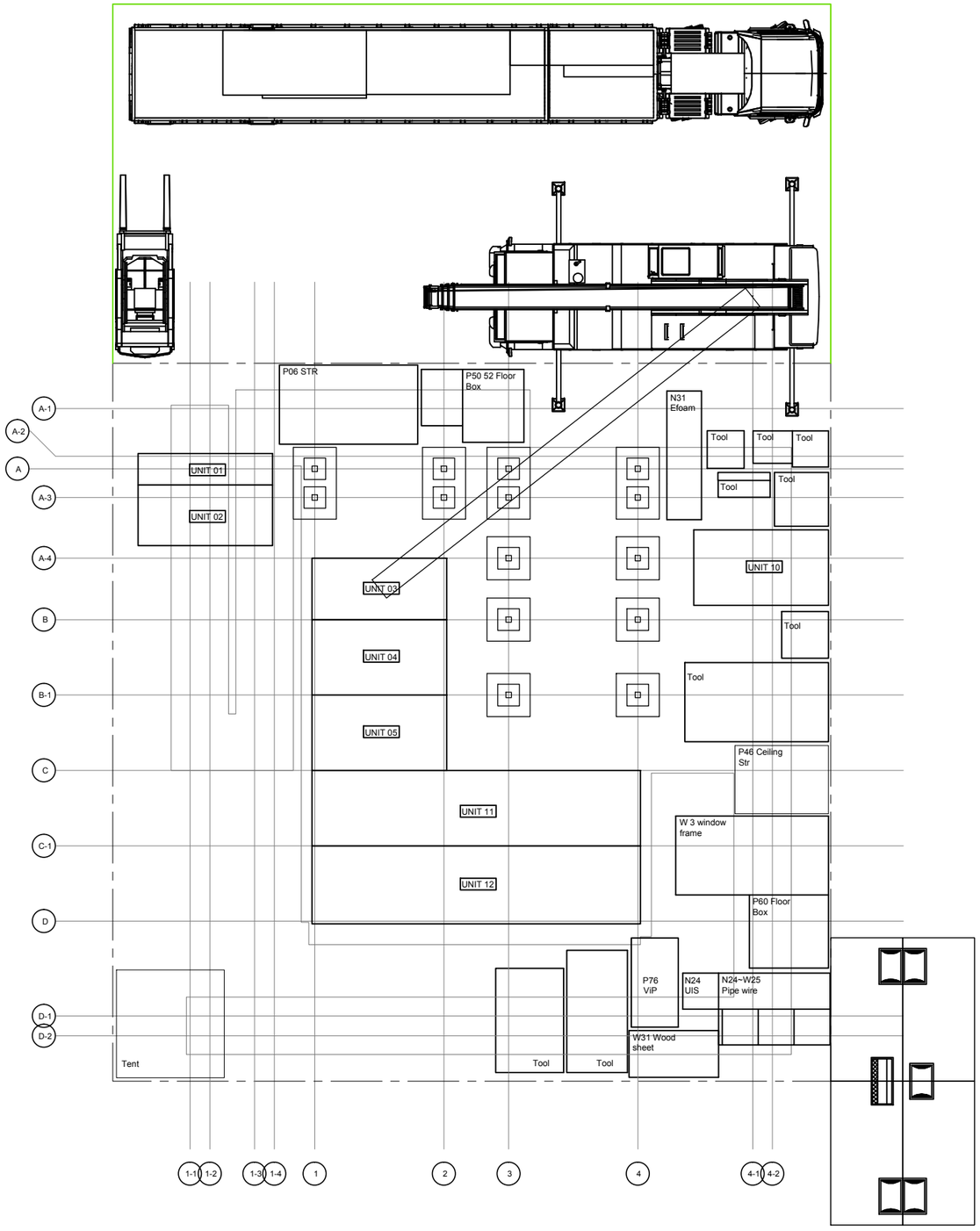

0 1 2 5 METER

Solar Decathlon Europe

Project: ORCHID HOUSE

Institution: 國立交通大學 National Chiao Tung University

NCTU Architecture 國立交通大學建築研究所

Team Name: NCTU/UNICODE

Address: 1001 Ta-Hsueh Road
Hsinchu City 30010
Taiwan

Contact: www.sde.tw

Consultants:

Note:

Mark	Date	Description
DN	2013/04/01	SD Submission
DN	2013/07/01	DDc Submission
ST	2013/11/01	DD Submission
ST	2014/03/03	CD Submission
ST	2014/04/30	CD Submission
ST	2014/06/02	CD Submission

Drawn by	MS
Checked by	BT
Scale	1:100
Unit	mm

DWG. Title

ASSEMBLY LOT PLAN
TRUCK 05

DWG. No. SO-405

PAGE 273

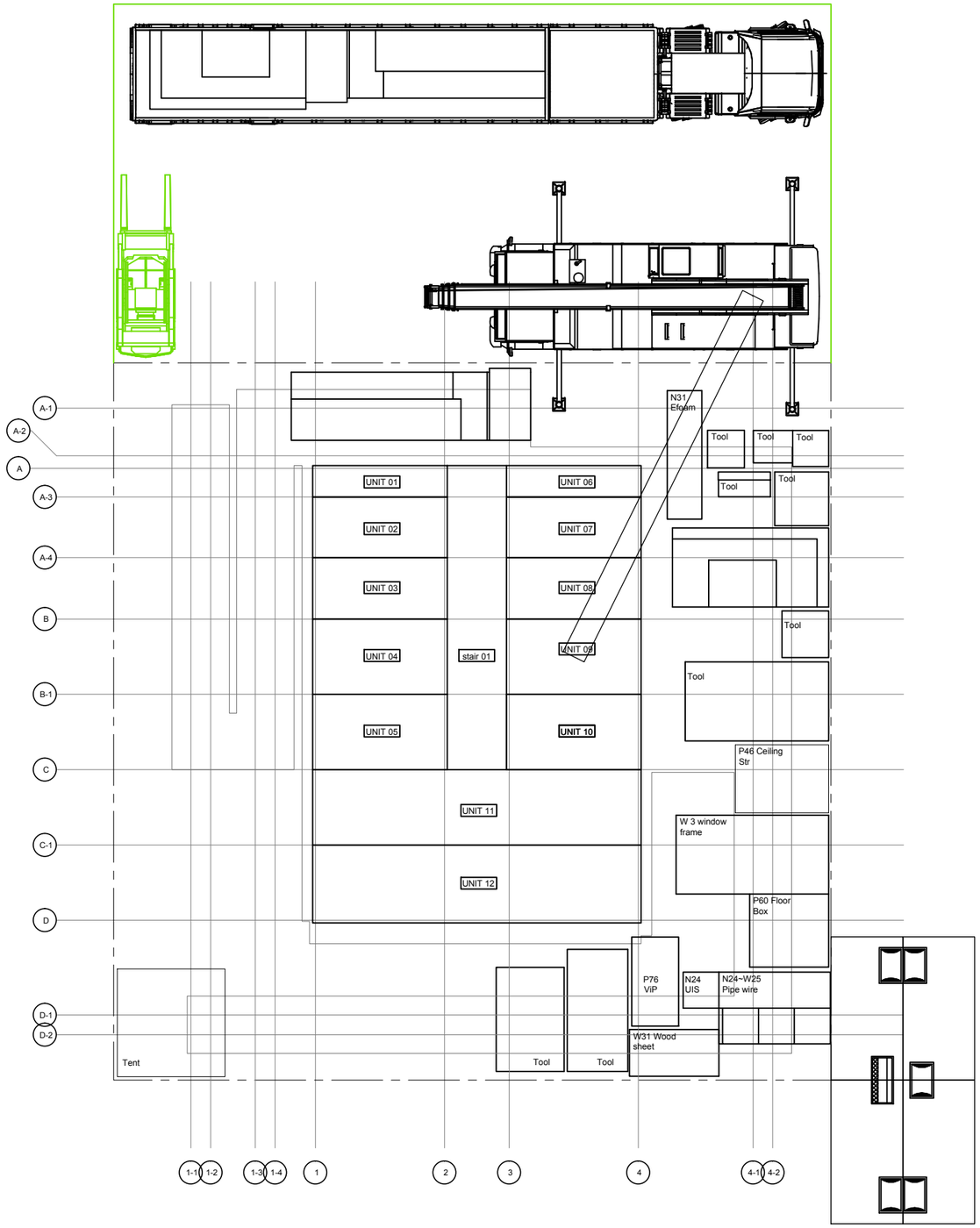

0 1 2 5 METER

Solar Decathlon Europe

Project: ORCHID HOUSE

Institution: 國立交通大學 National Chiao Tung University

NCTU Architecture 國立交通大學建築研究所

Team Name: NCTU/UNICODE

Address: 1001 Ta-Hsueh Road
Hsinchu City 30010
Taiwan

Contact: www.sde.tw

Consultants:

Note:

N

Mark	Date	Description
DN	2013/04/01	SD Submission
DN	2013/07/01	DDc Submission
ST	2013/11/01	DD Submission
ST	2014/03/03	CD Submission
ST	2014/04/30	CD Submission
ST	2014/06/02	CD Submission

Drawn by	MS
Checked by	BT
Scale	1:100
Unit	mm

DWG. Title

ASSEMBLY LOT PLAN
TRUCK 06

DWG. No. SO-406

PAGE 274

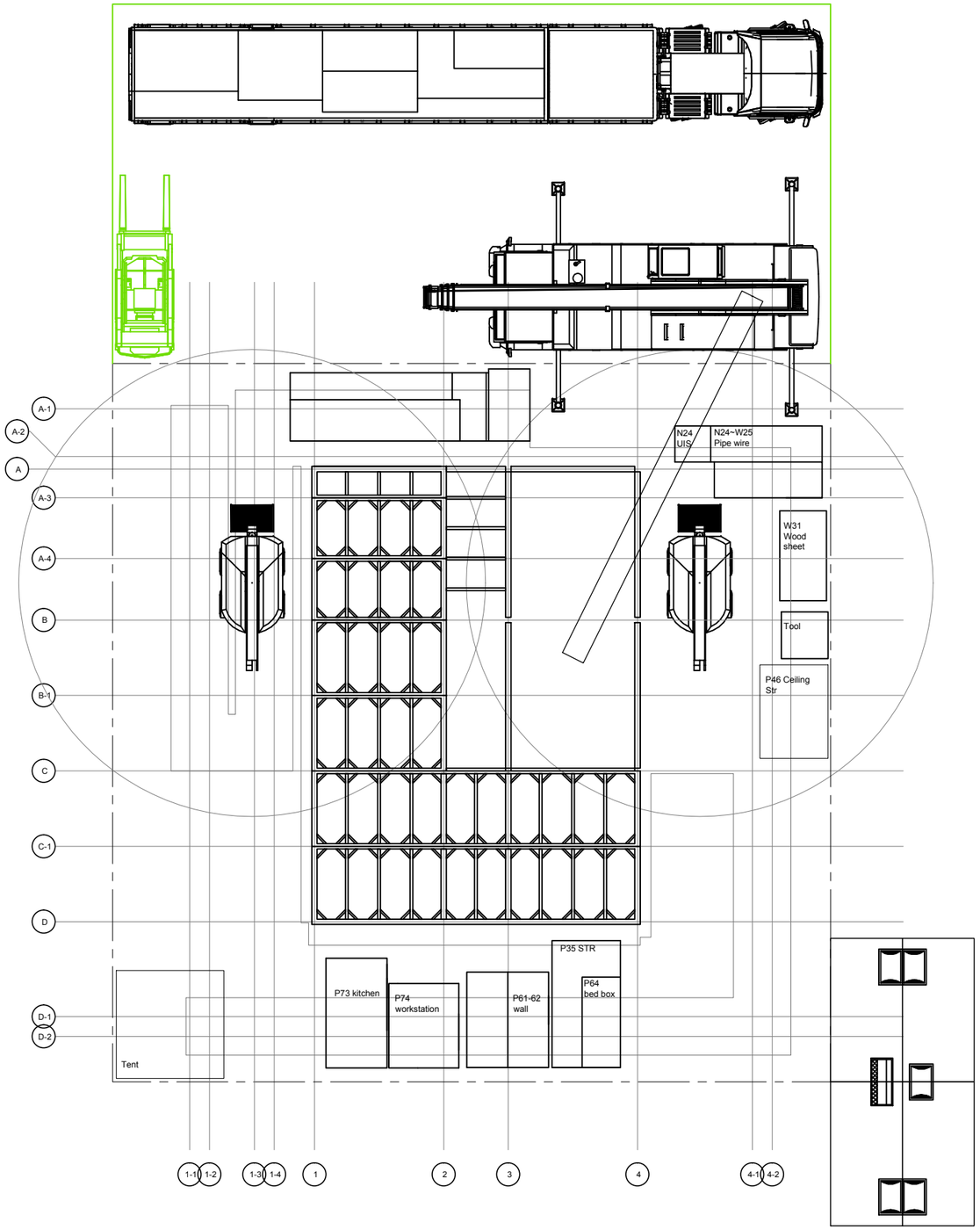

0 1 2 5 METER

Solar Decathlon Europe

Project: ORCHID HOUSE

Institution: 國立交通大學 National Chiao Tung University

NCTU Architecture 國立交通大學建築研究所

Team Name:	NCTU/UNICODE
Address:	1001 Ta-Hsueh Road Hsinchu City 30010 Taiwan
Contact:	www.sde.tw

Consultants:

Note:

Mark	Date	Description
DN	2013/04/01	SD Submission
DN	2013/07/01	DDc Submission
ST	2013/11/01	DD Submission
ST	2014/03/03	CD Submission
ST	2014/04/30	CD Submission
ST	2014/06/02	CD Submission

Drawn by	MS
Checked by	BT
Scale	1:100
Unit	mm

DWG. Title

ASSEMBLY LOT PLAN
TRUCK 07

DWG. No. SO-407

PAGE 275

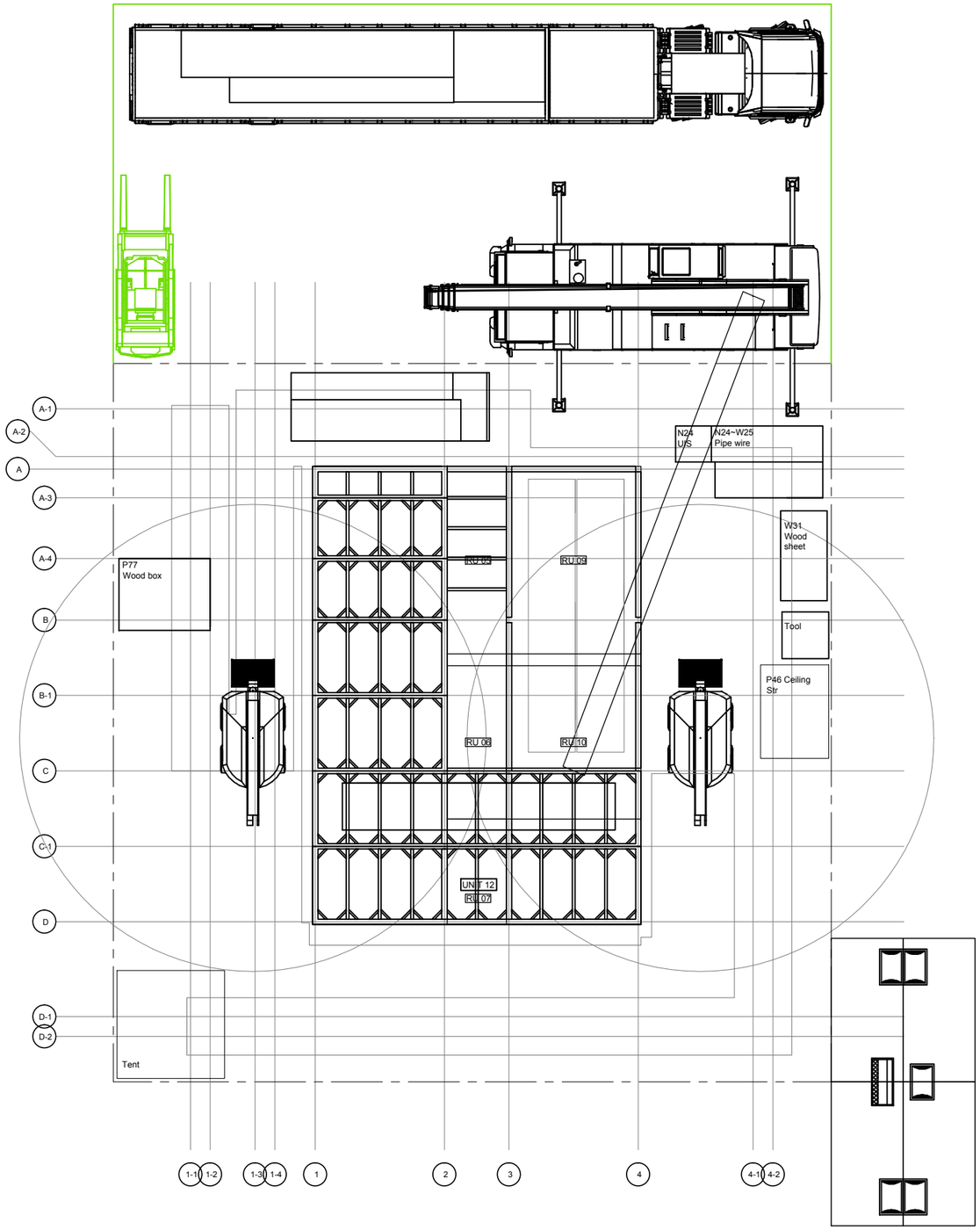

0 1 2 5 METER

Solar Decathlon Europe

Project:

ORCHID HOUSE

Institution:

國立交通大學 National Chiao Tung University

NCTU Architecture 國立交通大學建築研究所

Team Name: NCTU/UNICODE

Address: 1001 Ta-Hsueh Road
Hsinchu City 30010
Taiwan

Contact: www.sde.tw

Consultants:

Note:

Mark	Date	Description
DN	2013/04/01	SD Submission
DN	2013/07/01	DDc Submission
ST	2013/11/01	DD Submission
ST	2014/03/03	CD Submission
ST	2014/04/30	CD Submission
ST	2014/06/02	CD Submission

Drawn by	MS
Checked by	BT
Scale	1:100
Unit	mm

DWG. Title

ASSEMBLY LOT PLAN
TRUCK 08

DWG. No. SO-408

PAGE 276

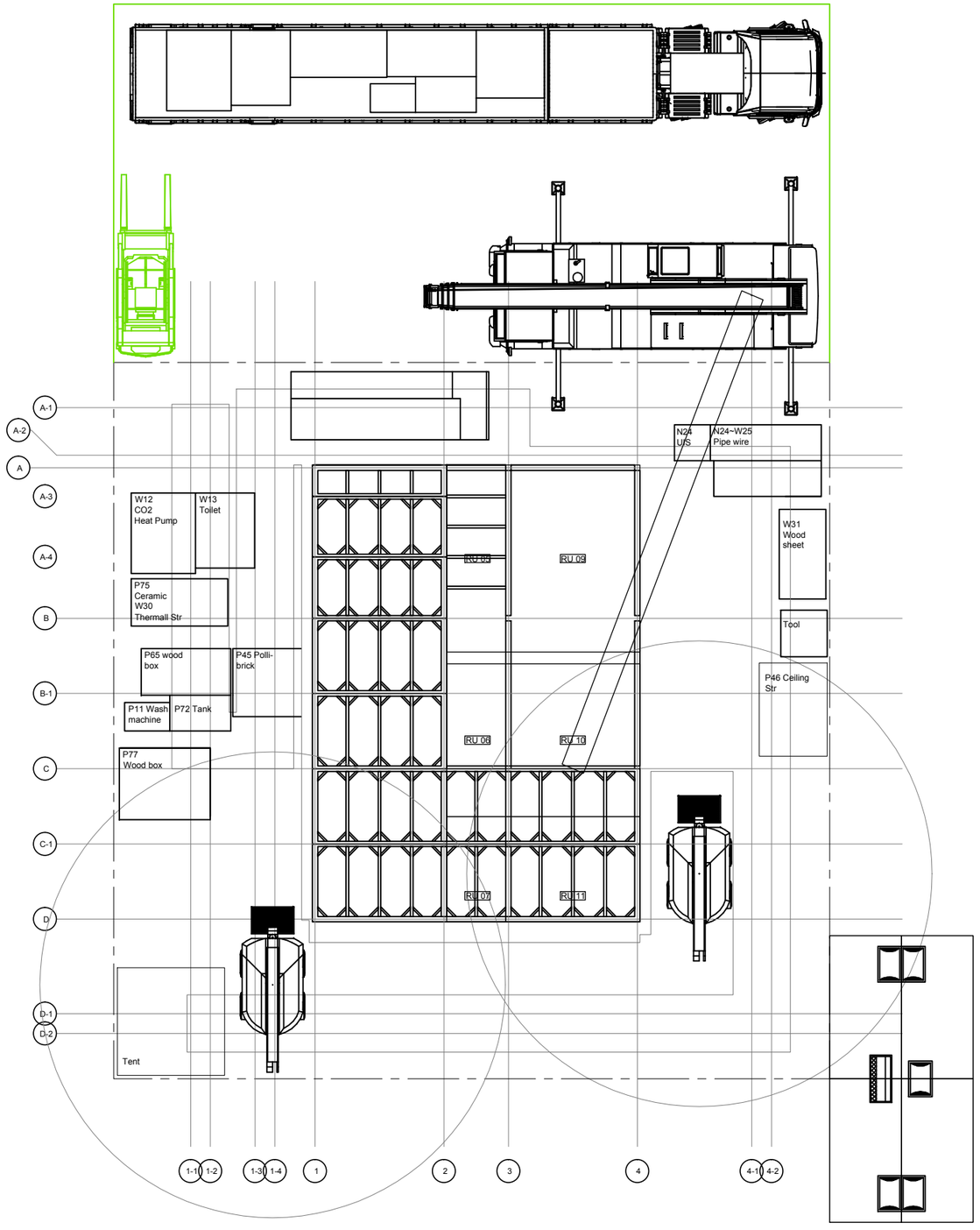

0 1 2 5 METER

Solar Decathlon Europe

Project:

ORCHID HOUSE

Institution:

國立交通大學
National Chiao Tung University

NCTU Architecture
國立交通大學建築研究所

Team Name: NCTU/UNICODE

Address: 1001 Ta-Hsueh Road
Hsinchu City 30010
Taiwan

Contact: www.sde.tw

Consultants:

Note:

N

Mark	Date	Description
DN	2013/04/01	SD Submission
DN	2013/07/01	DDc Submission
ST	2013/11/01	DD Submission
ST	2014/03/03	CD Submission
ST	2014/04/30	CD Submission
ST	2014/06/02	CD Submission

Drawn by	MS
Checked by	BT
Scale	1:100
Unit	mm

DWG. Title

ASSEMBLY LOT PLAN
TRUCK 09

DWG. No. SO-409

PAGE 277

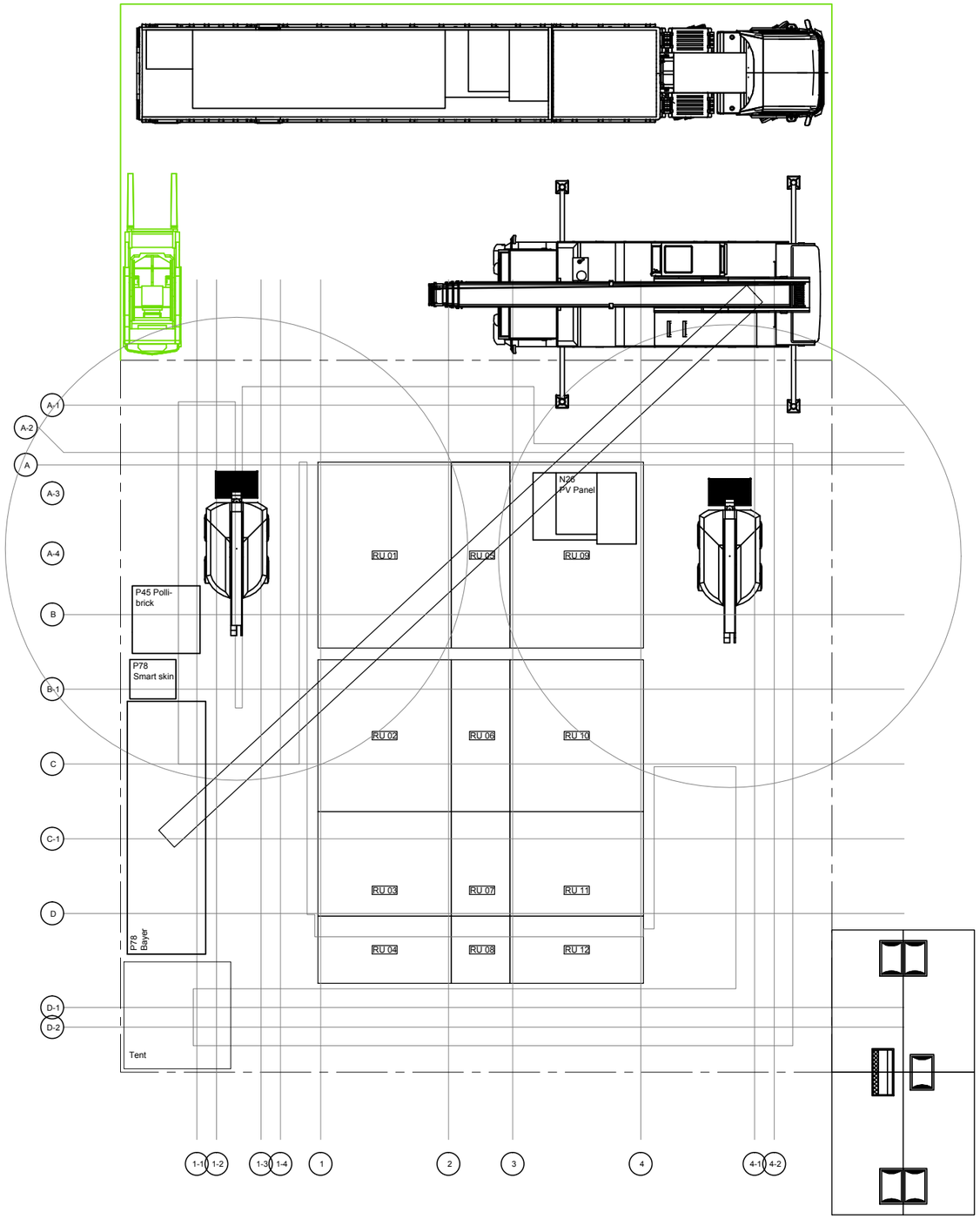

0 1 2 5 METER

Solar Decathlon Europe

Project:

ORCHID HOUSE

Institution:

國立交通大學
National Chiao Tung University

NCTU Architecture
國立交通大學建築研究所

Team Name: NCTU/UNICODE

Address: 1001 Ta-Hsueh Road
Hsinchu City 30010
Taiwan

Contact: www.sde.tw

Consultants:

Note:

N

Mark	Date	Description
DN	2013/04/01	SD Submission
DN	2013/07/01	DDc Submission
ST	2013/11/01	DD Submission
ST	2014/03/03	CD Submission
ST	2014/04/30	CD Submission
ST	2014/06/02	CD Submission

Drawn by	MS
Checked by	BT
Scale	1:100
Unit	mm

DWG. Title

ASSEMBLY LOT PLAN
TRUCK 10

DWG. No. SO-410

PAGE 278

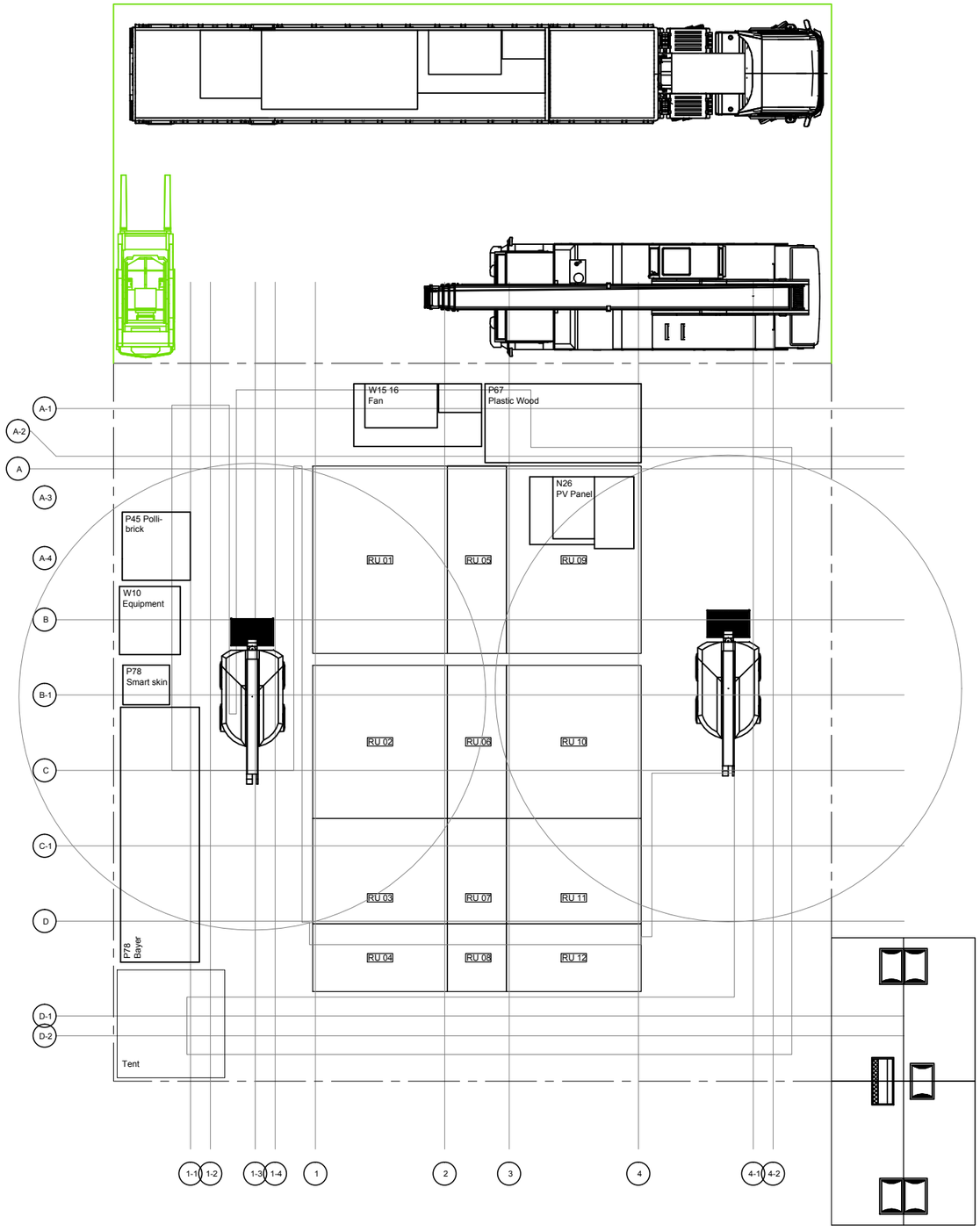

0 1 2 5 METER

Solar Decathlon Europe

Project:

ORCHID HOUSE

Institution:

國立交通大學 National Chiao Tung University

NCTU Architecture 國立交通大學建築研究所

Team Name:	NCTU/UNICODE
Address:	1001 Ta-Hsueh Road Hsinchu City 30010 Taiwan
Contact:	www.sde.tw

Consultants:

Note:

Mark	Date	Description
DN	2013/04/01	SD Submission
DN	2013/07/01	DDc Submission
ST	2013/11/01	DD Submission
ST	2014/03/03	CD Submission
ST	2014/04/30	CD Submission
ST	2014/06/02	CD Submission

Drawn by	MS
Checked by	BT
Scale	1:100
Unit	mm

DWG. Title

ASSEMBLY LOT PLAN
TRUCK 11

DWG. No. SO-411

PAGE 279

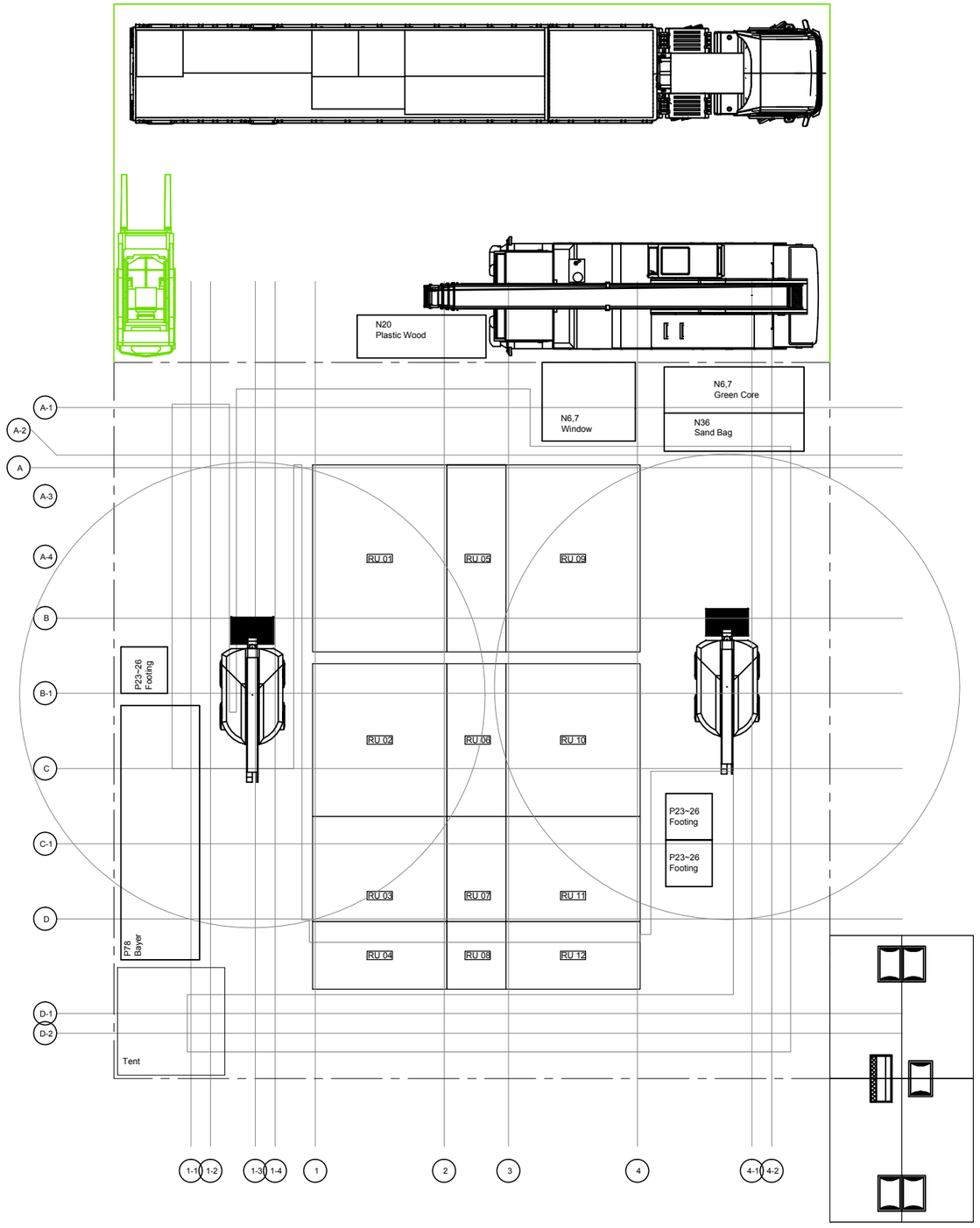

0 1 2 5 METER

Solar Decathlon Europe

Project:

ORCHID HOUSE

Institution:

國立交通大學
National Chiao Tung University

NCTU Architecture
國立交通大學建築研究所

Team Name:	NCTU/UNICODE
Address:	1001 Ta-Hsueh Road Hsinchu City 30010 Taiwan
Contact:	www.sde.tw

Consultants:

Note:

N

Mark	Date	Description
DN	2013/04/01	SD Submission
DN	2013/07/01	DDc Submission
ST	2013/11/01	DD Submission
ST	2014/03/03	CD Submission
ST	2014/04/30	CD Submission
ST	2014/06/02	CD Submission

Drawn by	MS
Checked by	BT
Scale	1:100
Unit	mm

DWG. Title

ASSEMBLY LOT PLAN
TRUCK 12

DWG. No.	PAGE
SO-412	280

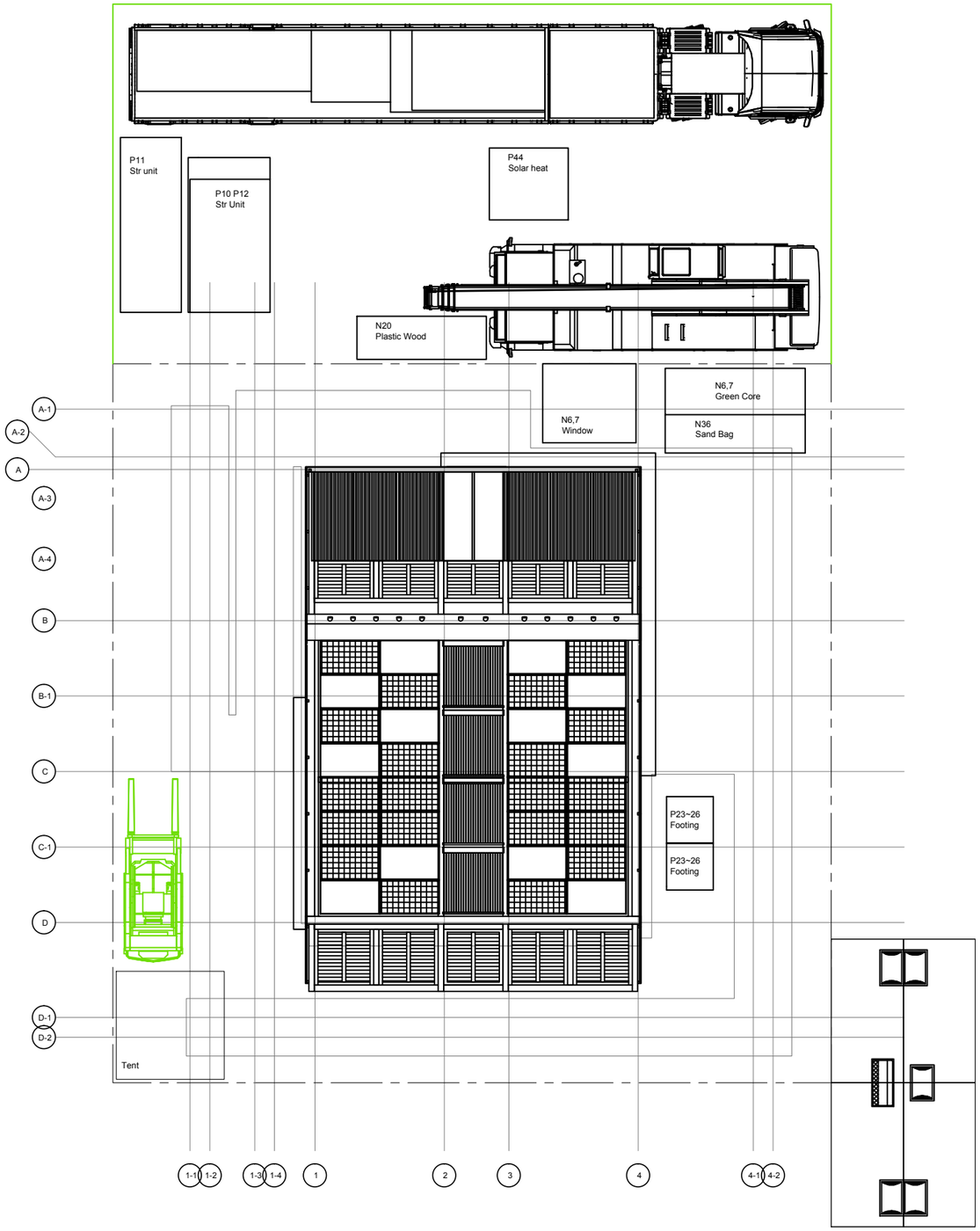

0 1 2 5 METER

Solar Decathlon Europe

Project:

ORCHID HOUSE

Institution:

國立交通大學 National Chiao Tung University

NCTU Architecture 國立交通大學建築研究所

Team Name: NCTU/UNICODE

Address: 1001 Ta-Hsueh Road
Hsinchu City 30010
Taiwan

Contact: www.sde.tw

Consultants:

Note:

Mark	Date	Description
DN	2013/04/01	SD Submission
DN	2013/07/01	DDc Submission
ST	2013/11/01	DD Submission
ST	2014/03/03	CD Submission
ST	2014/04/30	CD Submission
ST	2014/06/02	CD Submission

Drawn by	MS
Checked by	BT
Scale	1:100
Unit	mm

DWG. Title

ASSEMBLY LOT PLAN
TRUCK 13

DWG. No. SO-413

PAGE 281

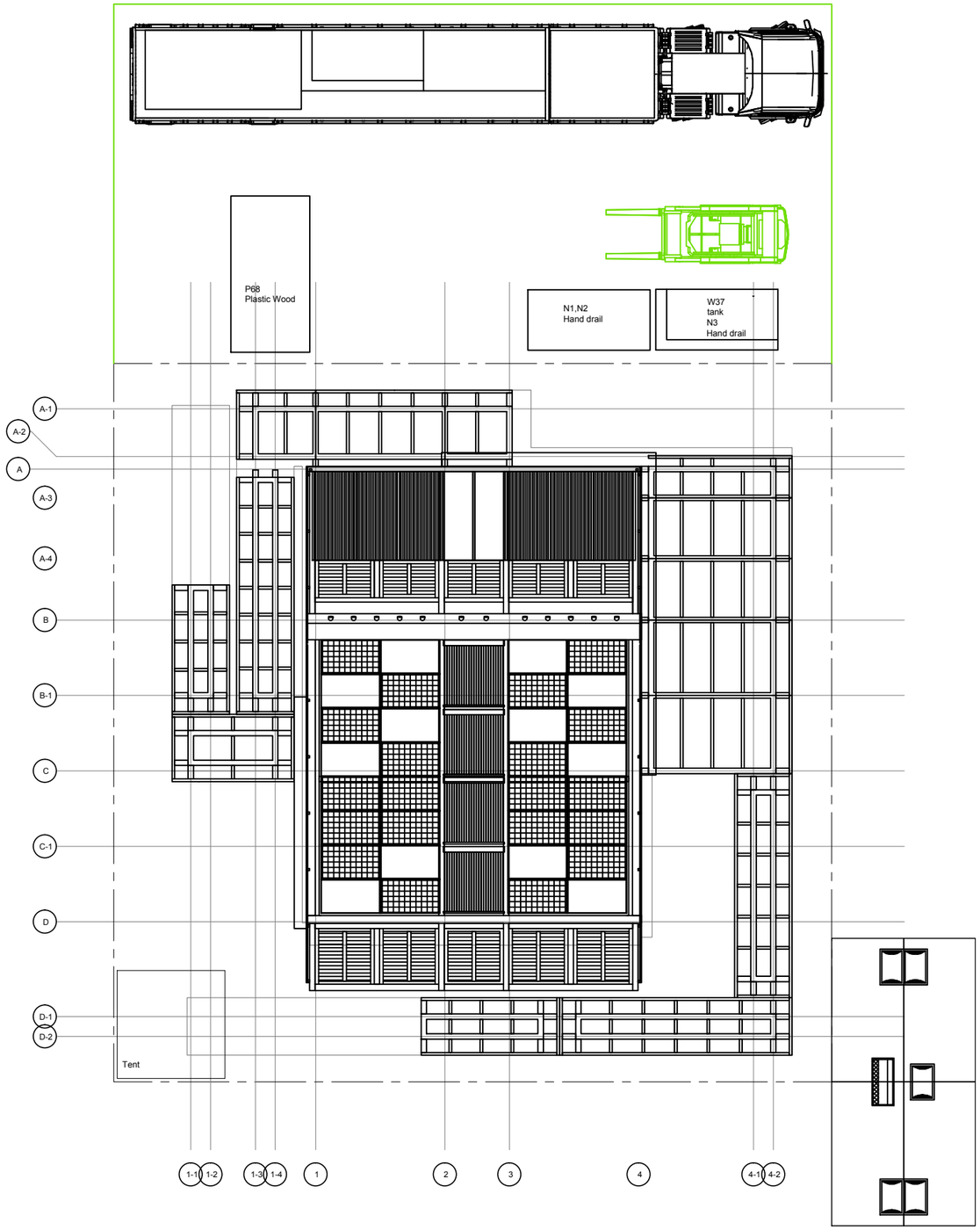

0 1 2 5 METER

Solar Decathlon Europe

Project:

ORCHID HOUSE

Institution:

國立交通大學 National Chiao Tung University

NCTU Architecture 國立交通大學建築研究所

Team Name: NCTU/UNICODE

Address: 1001 Ta-Hsueh Road
Hsinchu City 30010
Taiwan

Contact: www.sde.tw

Consultants:

Note:

Mark	Date	Description
DN	2013/04/01	SD Submission
DN	2013/07/01	DDc Submission
ST	2013/11/01	DD Submission
ST	2014/03/03	CD Submission
ST	2014/04/30	CD Submission
ST	2014/06/02	CD Submission

Drawn by	MS
Checked by	BT
Scale	1:100
Unit	mm

DWG. Title

ASSEMBLY LOT PLAN
TRUCK 14

DWG. No. SO-414

PAGE 282

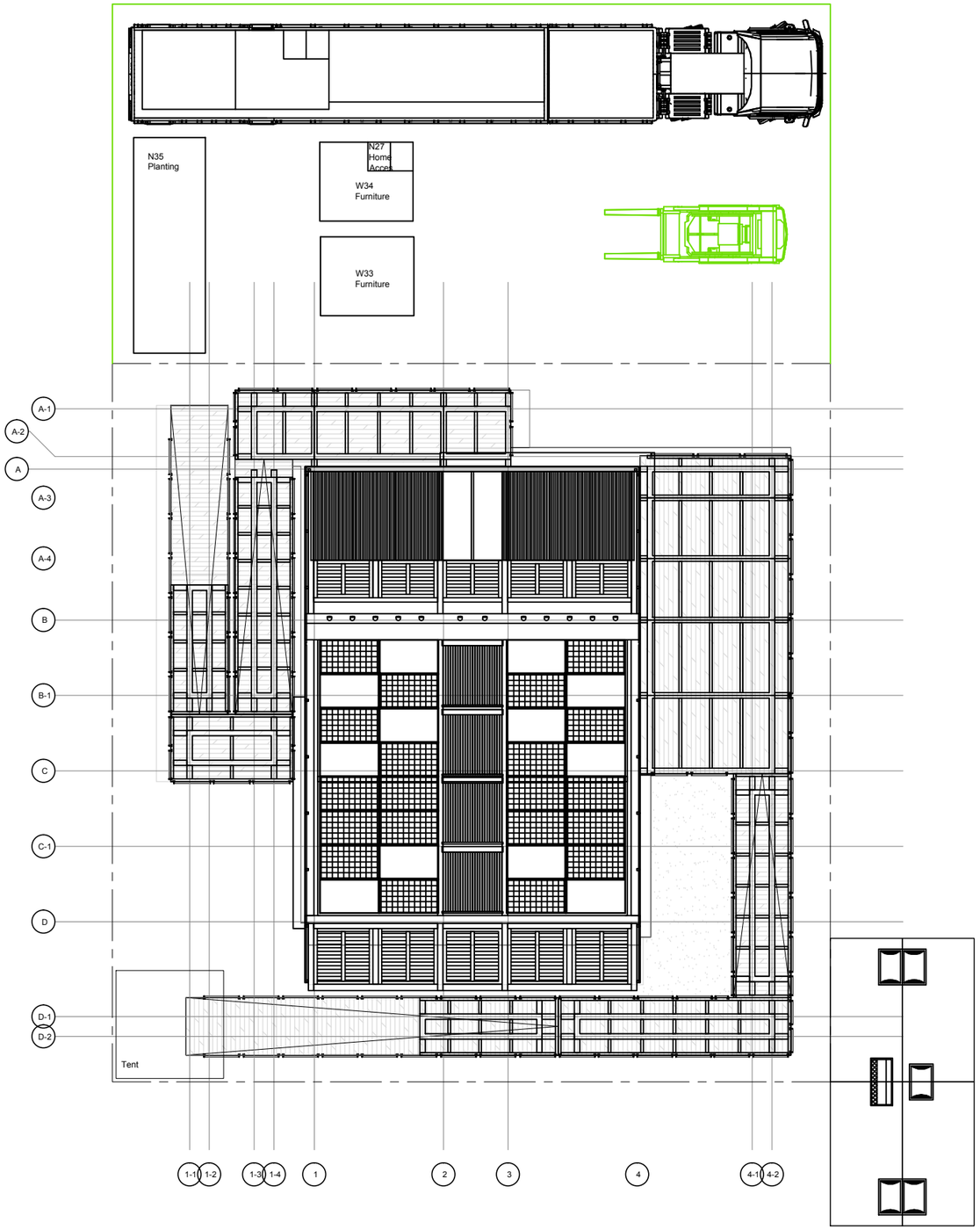

0 1 2 5 METER

Solar Decathlon Europe

Project:

ORCHID HOUSE

Institution:

國立交通大學 National Chiao Tung University

NCTU Architecture 國立交通大學建築研究所

Team Name: NCTU/UNICODE

Address: 1001 Ta-Hsueh Road
Hsinchu City 30010
Taiwan

Contact: www.sde.tw

Consultants:

Note:

Mark	Date	Description
DN	2013/04/01	SD Submission
DN	2013/07/01	DDc Submission
ST	2013/11/01	DD Submission
ST	2014/03/03	CD Submission
ST	2014/04/30	CD Submission
ST	2014/06/02	CD Submission

Drawn by	MS
Checked by	BT
Scale	1:100
Unit	mm

DWG. Title

ASSEMBLY LOT PLAN
TRUCK 15

DWG. No. SO-415

PAGE 283

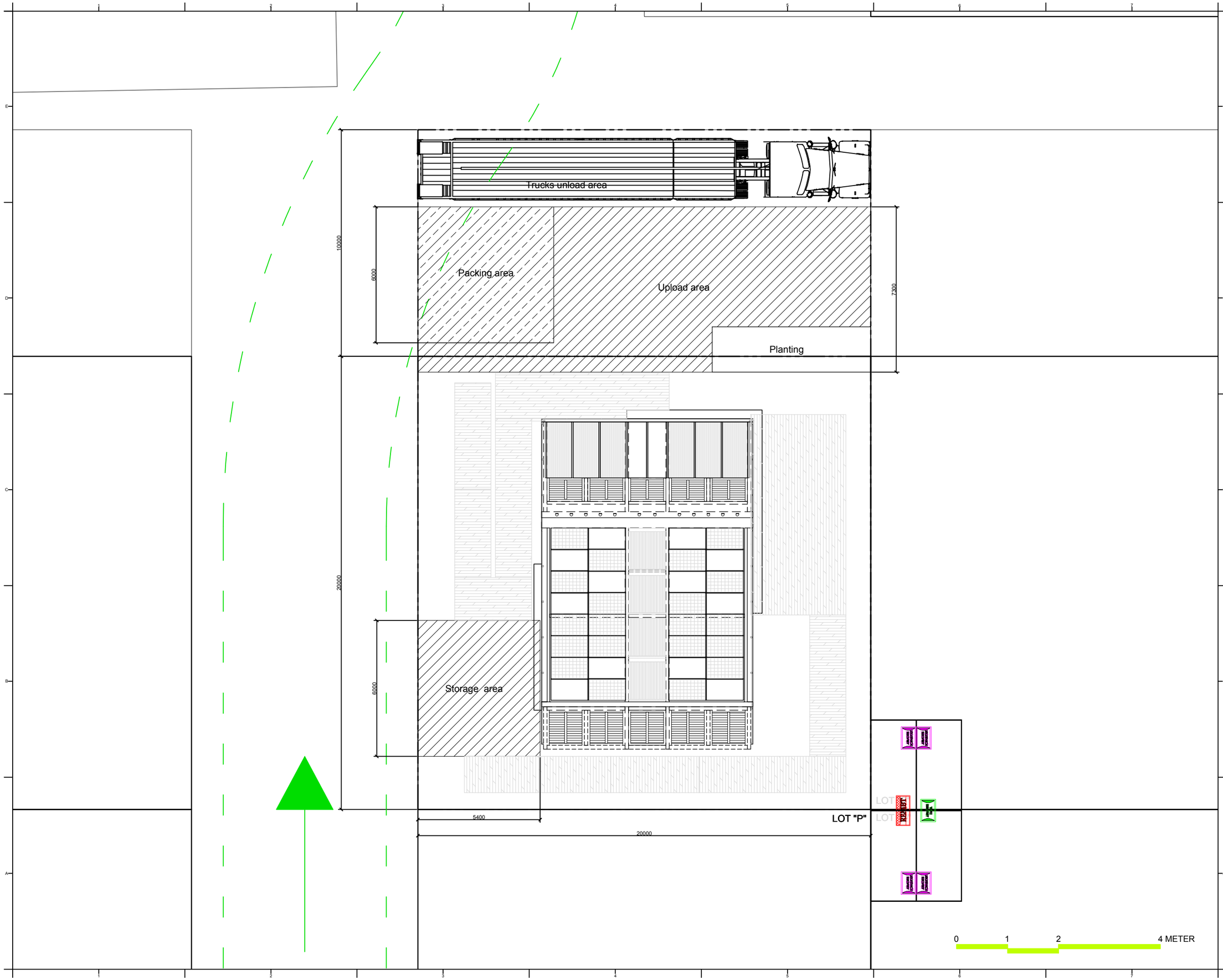

Solar Decathlon Europe

Project:

ORCHID HOUSE

Institution:

國立交通大學 National Chiao Tung University

NCTU Architecture 國立交通大學建築研究所

Team Name:	NCTU/UNICODE
Address:	1001 Ta-Hsueh Road Hsinchu City 30010 Taiwan
Contact:	www.sde.tw

Consultants:

Note:

Mark	Date	Description
DN	2013/04/01	SD Submission
DN	2013/07/01	DDc Submission
ST	2013/11/01	DD Submission
ST	2014/03/03	CD Submission
ST	2014/04/30	CD Submission
ST	2014/06/02	CD Submission

Drawn by	SC
Checked by	-
Scale	1:150
Unit	mm

DWG. Title

DISASSEMBLY LOTS PLAN
TRUCK 01

DWG. No.	PAGE
SO-501	284

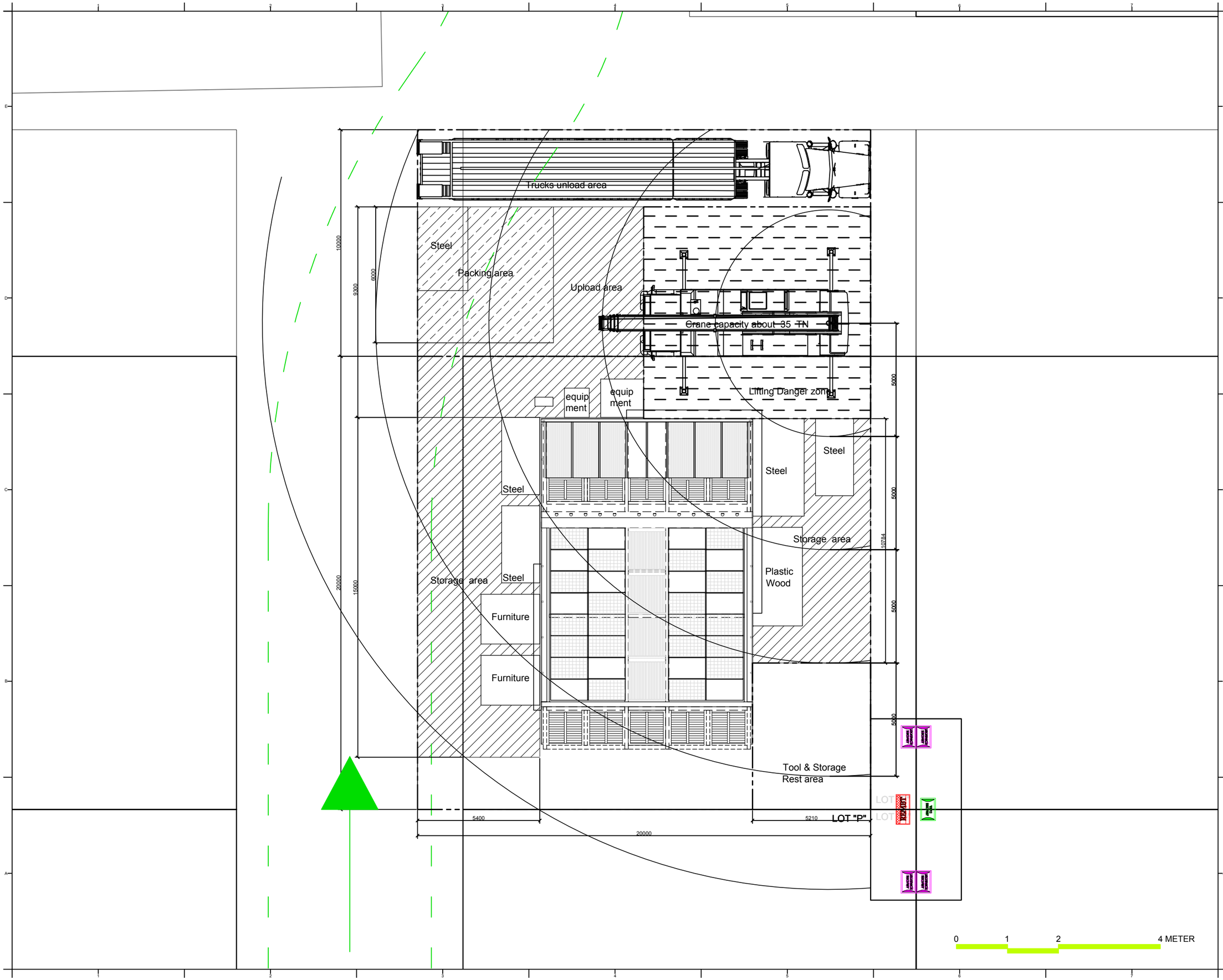

Solar Decathlon Europe

Project: ORCHID HOUSE

Institution: 國立交通大學 National Chiao Tung University

NCTU Architecture 國立交通大學建築研究所

Team Name: NCTU/UNICODE

Address: 1001 Ta-Hsueh Road
Hsinchu City 30010
Taiwan

Contact: www.sde.tw

Consultants:

Note:

Mark	Date	Description
DN	2013/04/01	SD Submission
DN	2013/07/01	DDc Submission
ST	2013/11/01	DD Submission
ST	2014/03/03	CD Submission
ST	2014/04/30	CD Submission
ST	2014/06/02	CD Submission

Drawn by	SC
Checked by	-
Scale	1:150
Unit	mm

DWG. Title

DISASSEMBLY LOTS PLAN
TRUCK 02 & 03

DWG. No. SO-502

PAGE 285

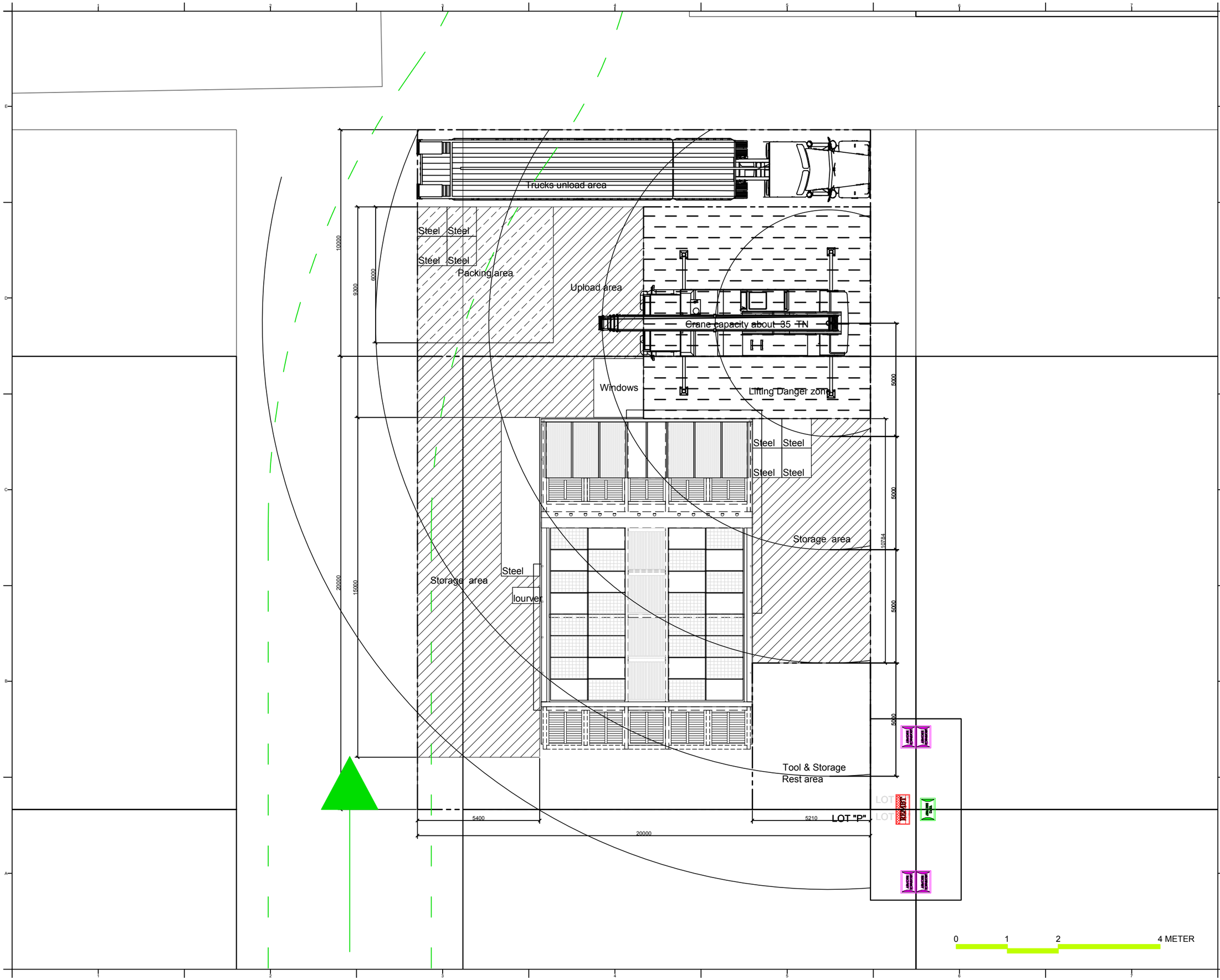

Solar Decathlon Europe

Project: ORCHID HOUSE

Institution: 國立交通大學 National Chiao Tung University

NCTU Architecture 國立交通大學建築研究所

Team Name: NCTU/UNICODE

Address: 1001 Ta-Hsueh Road
Hsinchu City 30010
Taiwan

Contact: www.sde.tw

Consultants:

Note:

Mark	Date	Description
DN	2013/04/01	SD Submission
DN	2013/07/01	DDc Submission
ST	2013/11/01	DD Submission
ST	2014/03/03	CD Submission
ST	2014/04/30	CD Submission
ST	2014/06/02	CD Submission

Drawn by	SC
Checked by	-
Scale	1:150
Unit	mm

DWG. Title

DISASSEMBLY LOTS PLAN
TRUCK 04

DWG. No. SO-503

PAGE 286

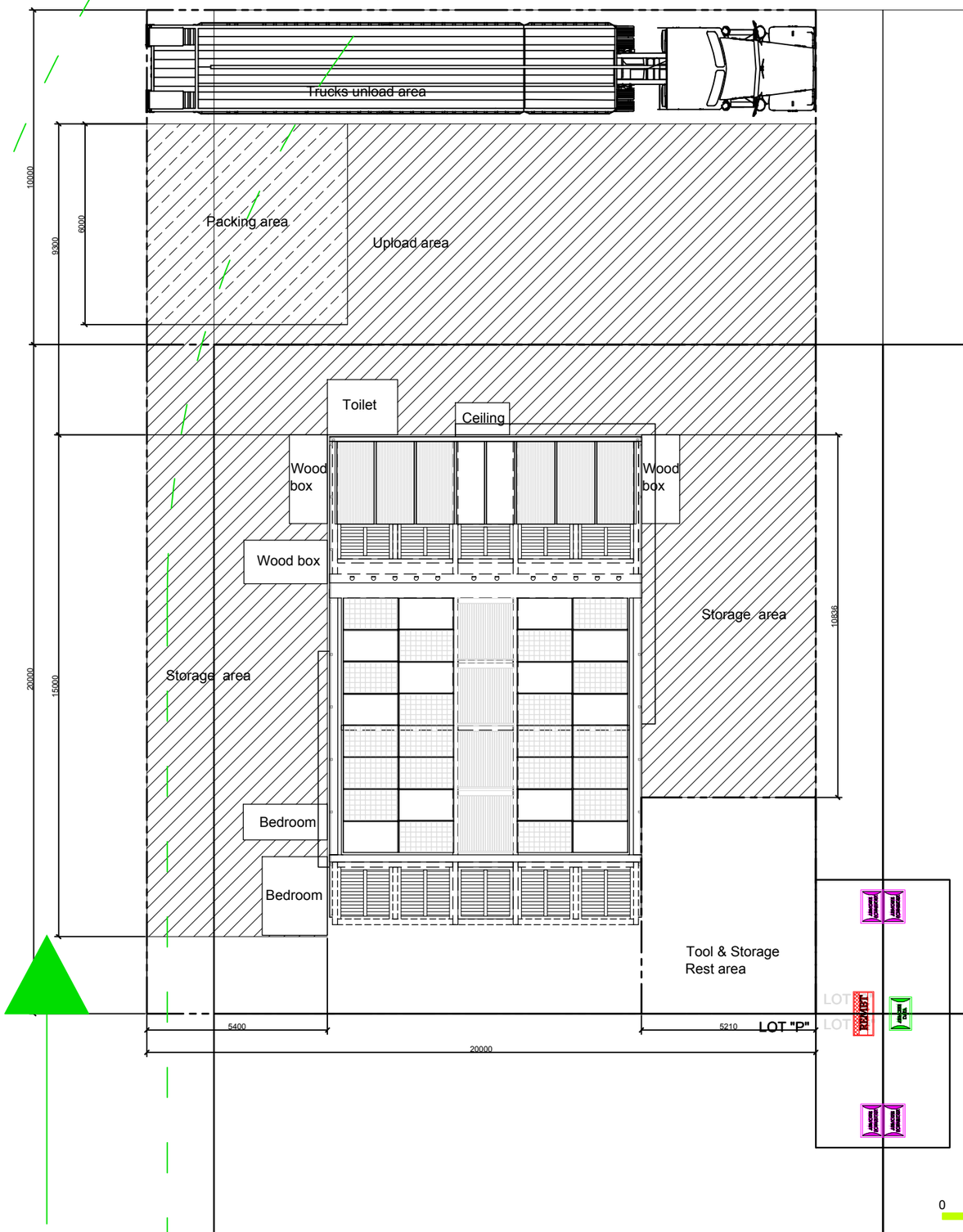

Solar Decathlon Europe

Project: ORCHID HOUSE

Institution: 國立交通大學 National Chiao Tung University

NCTU Architecture 國立交通大學建築研究所

Team Name: NCTU/UNICODE

Address: 1001 Ta-Hsueh Road
Hsinchu City 30010
Taiwan

Contact: www.sde.tw

Consultants:

Note:

Mark	Date	Description
DN	2013/04/01	SD Submission
DN	2013/07/01	DDc Submission
ST	2013/11/01	DD Submission
ST	2014/03/03	CD Submission
ST	2014/04/30	CD Submission
ST	2014/06/02	CD Submission

Drawn by	SC
Checked by	-
Scale	1:150
Unit	mm

DWG. Title

DISASSEMBLY LOTS PLAN
TRUCK 05

DWG. No. SO-504

PAGE 287

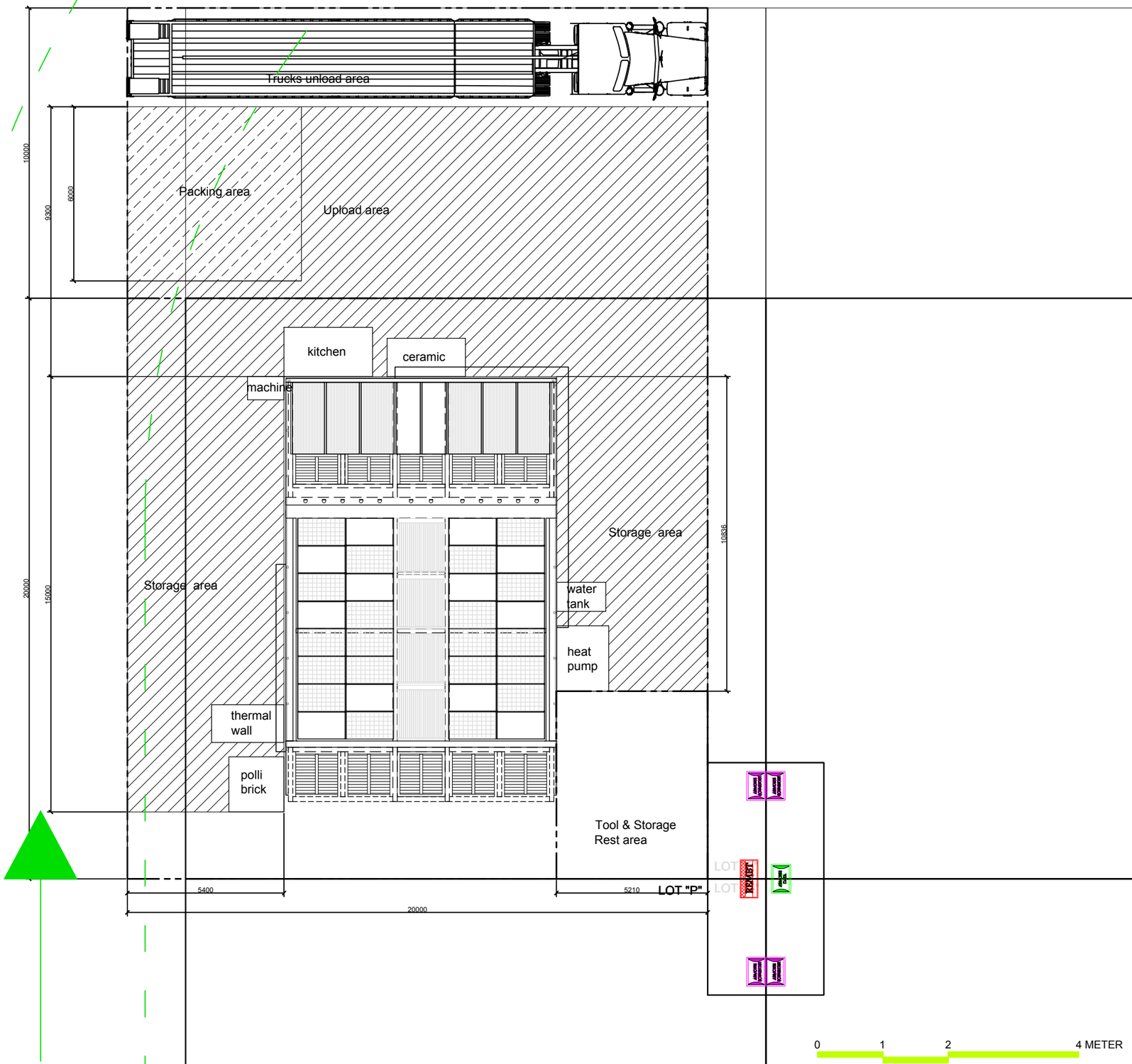

Solar Decathlon Europe

Project: ORCHID HOUSE

Institution: 國立交通大學 National Chiao Tung University

NCTU Architecture 國立交通大學建築研究所

Team Name: NCTU/UNICODE

Address: 1001 Ta-Hsueh Road
Hsinchu City 30010
Taiwan

Contact: www.sde.tw

Consultants:

Note:

Mark	Date	Description
DN	2013/04/01	SD Submission
DN	2013/07/01	DDc Submission
ST	2013/11/01	DD Submission
ST	2014/03/03	CD Submission
ST	2014/04/30	CD Submission
ST	2014/06/02	CD Submission

Drawn by	SC
Checked by	-
Scale	1:150
Unit	mm

DWG. Title

DISASSEMBLY LOTS PLAN
TRUCK 06

DWG. No. SO-505

PAGE 288

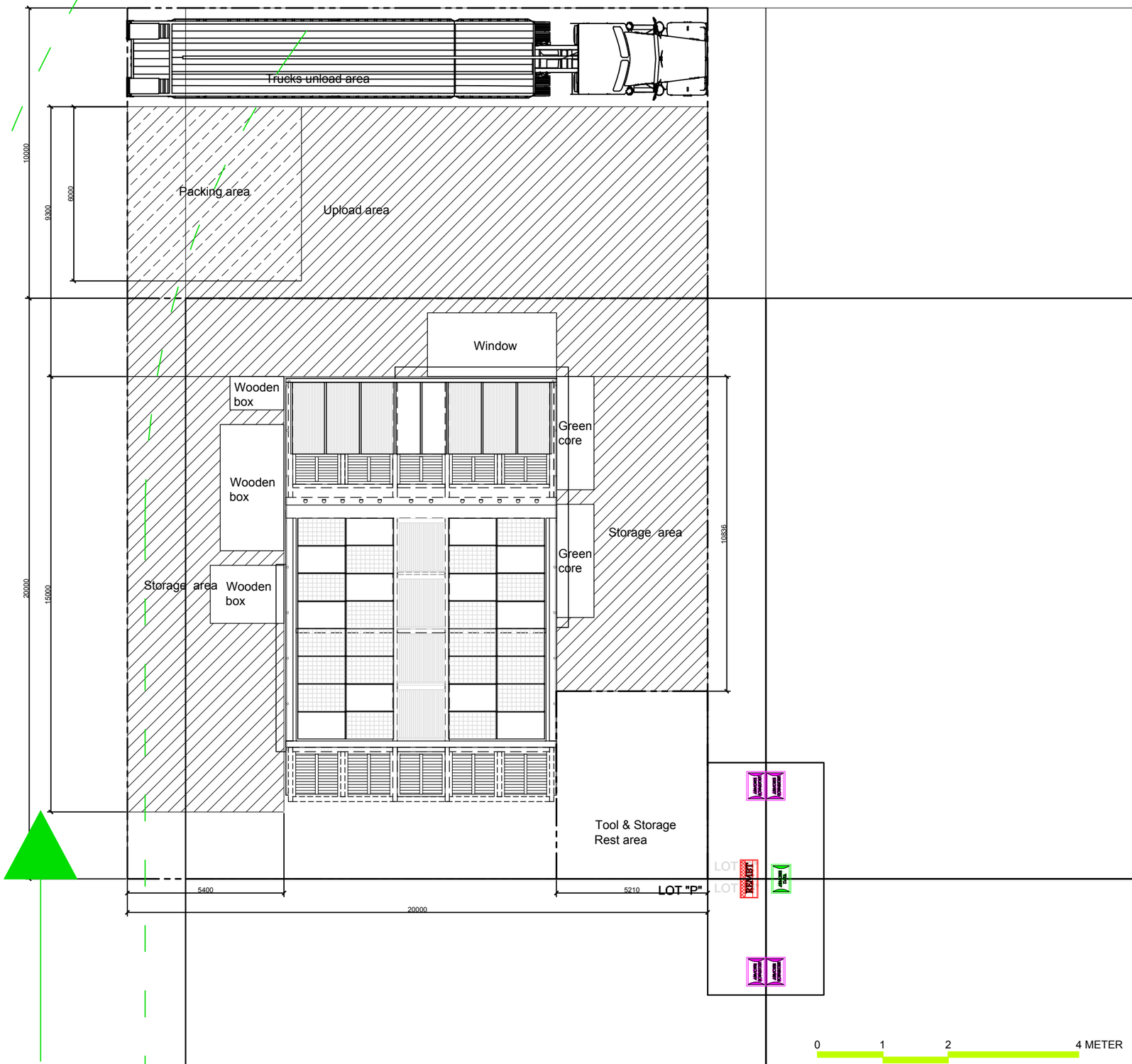

Solar Decathlon Europe

Project: ORCHID HOUSE

Institution: 國立交通大學 National Chiao Tung University

NCTU Architecture 國立交通大學建築研究所

Team Name:	NCTU/UNICODE
Address:	1001 Ta-Hsueh Road Hsinchu City 30010 Taiwan
Contact:	www.sde.tw

Consultants:

Note:

Mark	Date	Description
DN	2013/04/01	SD Submission
DN	2013/07/01	DDc Submission
ST	2013/11/01	DD Submission
ST	2014/03/03	CD Submission
ST	2014/04/30	CD Submission
ST	2014/06/02	CD Submission

Drawn by	SC
Checked by	-
Scale	1:150
Unit	mm

DWG. Title

DISASSEMBLY LOTS PLAN
TRUCK 07

DWG. No. SO-506

PAGE 289

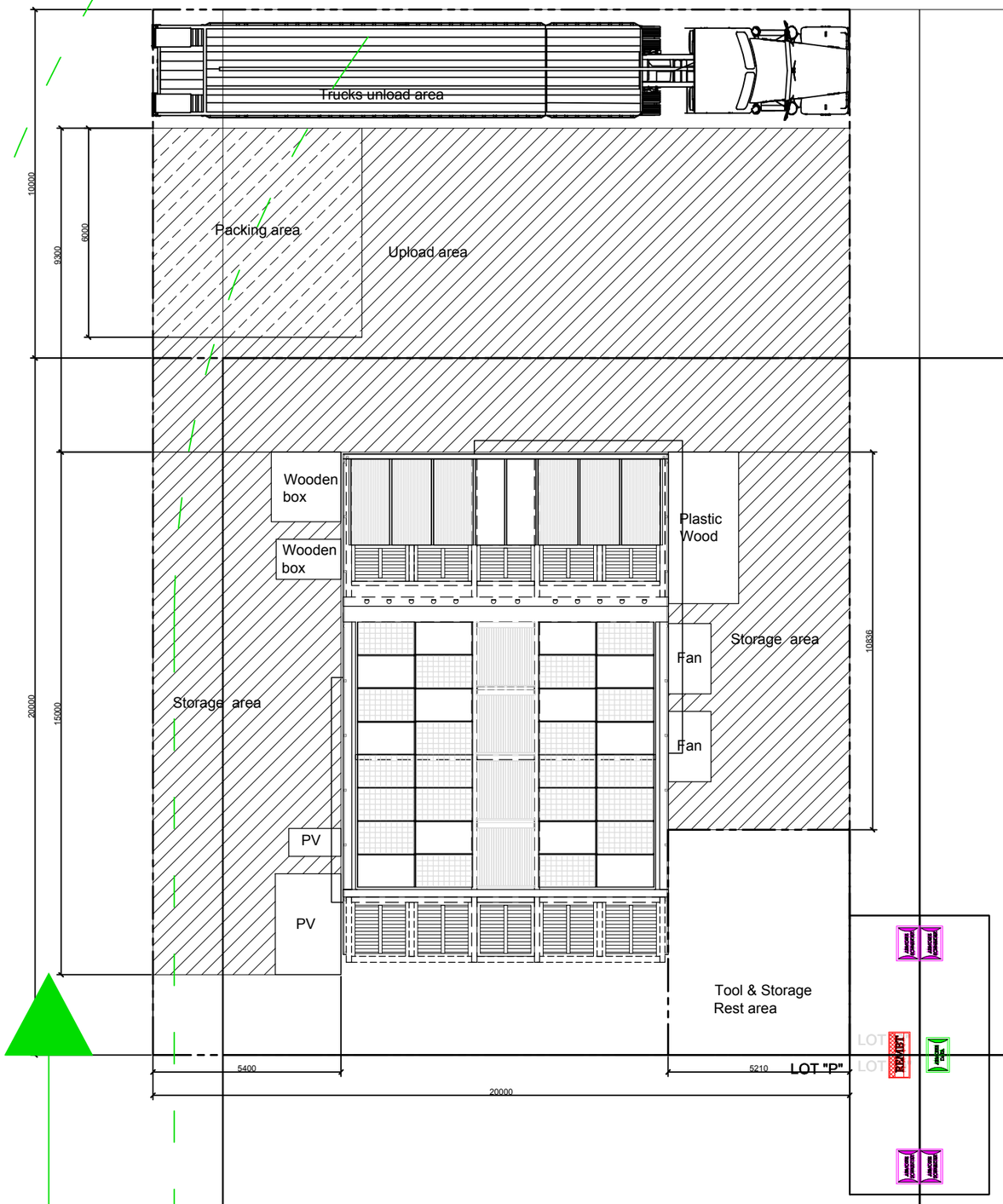

Solar Decathlon Europe

Project: ORCHID HOUSE

Institution: 國立交通大學 National Chiao Tung University

NCTU Architecture 國立交通大學建築研究所

Team Name: NCTU/UNICODE

Address: 1001 Ta-Hsueh Road
Hsinchu City 30010
Taiwan

Contact: www.sde.tw

Consultants:

Note:

Mark	Date	Description
DN	2013/04/01	SD Submission
DN	2013/07/01	DDc Submission
ST	2013/11/01	DD Submission
ST	2014/03/03	CD Submission
ST	2014/04/30	CD Submission
ST	2014/06/02	CD Submission

Drawn by	SC
Checked by	-
Scale	1:150
Unit	mm

DWG. Title

DISASSEMBLY LOTS PLAN
TRUCK 08

DWG. No. SO-507

PAGE 290

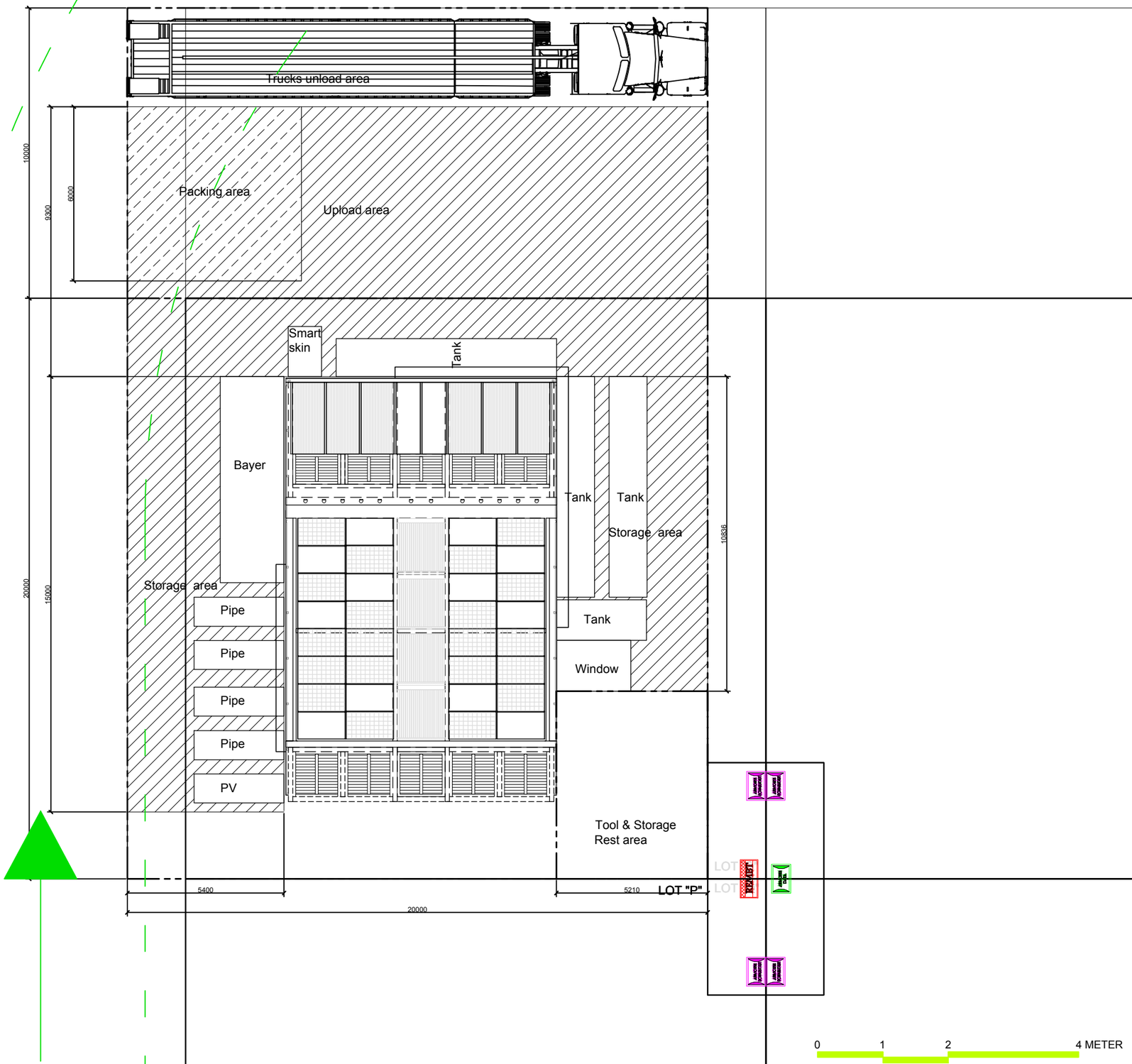

Solar Decathlon Europe

Project: ORCHID HOUSE

Institution: 國立交通大學 National Chiao Tung University

NCTU Architecture 國立交通大學建築研究所

Team Name: NCTU/UNICODE

Address: 1001 Ta-Hsueh Road
Hsinchu City 30010
Taiwan

Contact: www.sde.tw

Consultants:

Note:

Mark	Date	Description
DN	2013/04/01	SD Submission
DN	2013/07/01	DDc Submission
ST	2013/11/01	DD Submission
ST	2014/03/03	CD Submission
ST	2014/04/30	CD Submission
ST	2014/06/02	CD Submission

Drawn by	SC
Checked by	-
Scale	1:150
Unit	mm

DWG. Title

DISASSEMBLY LOTS PLAN
TRUCK 09 &10

DWG. No. SO-508

PAGE 291

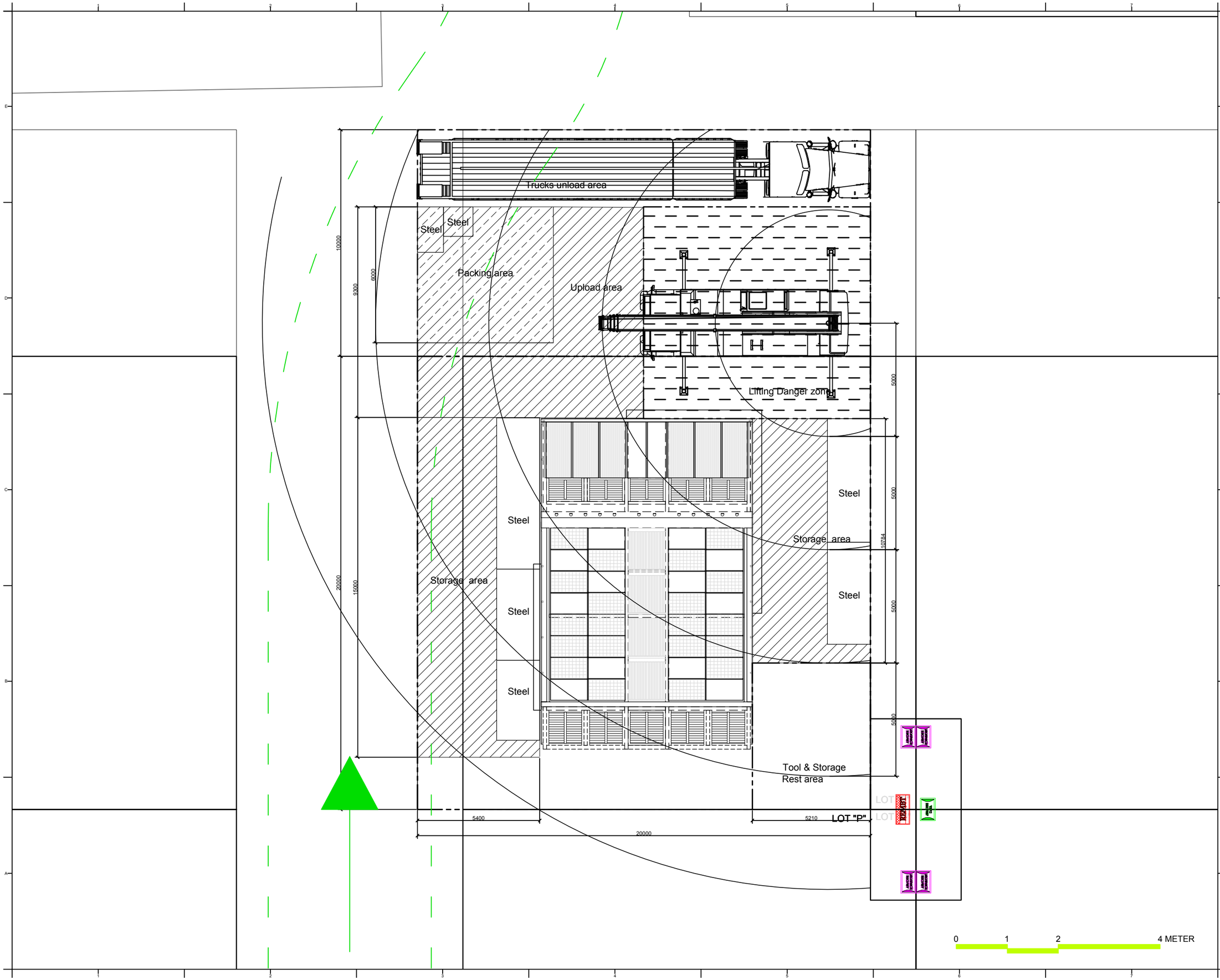

Solar Decathlon Europe

Project: ORCHID HOUSE

Institution: 國立交通大學 National Chiao Tung University

NCTU Architecture 國立交通大學建築研究所

Team Name: NCTU/UNICODE

Address: 1001 Ta-Hsueh Road
Hsinchu City 30010
Taiwan

Contact: www.sde.tw

Consultants:

Note:

Mark	Date	Description
DN	2013/04/01	SD Submission
DN	2013/07/01	DDc Submission
ST	2013/11/01	DD Submission
ST	2014/03/03	CD Submission
ST	2014/04/30	CD Submission
ST	2014/06/02	CD Submission

Drawn by	SC
Checked by	-
Scale	1:150
Unit	mm

DWG. Title

DISASSEMBLY LOTS PLAN
TRUCK 11

DWG. No. SO-509

PAGE 292

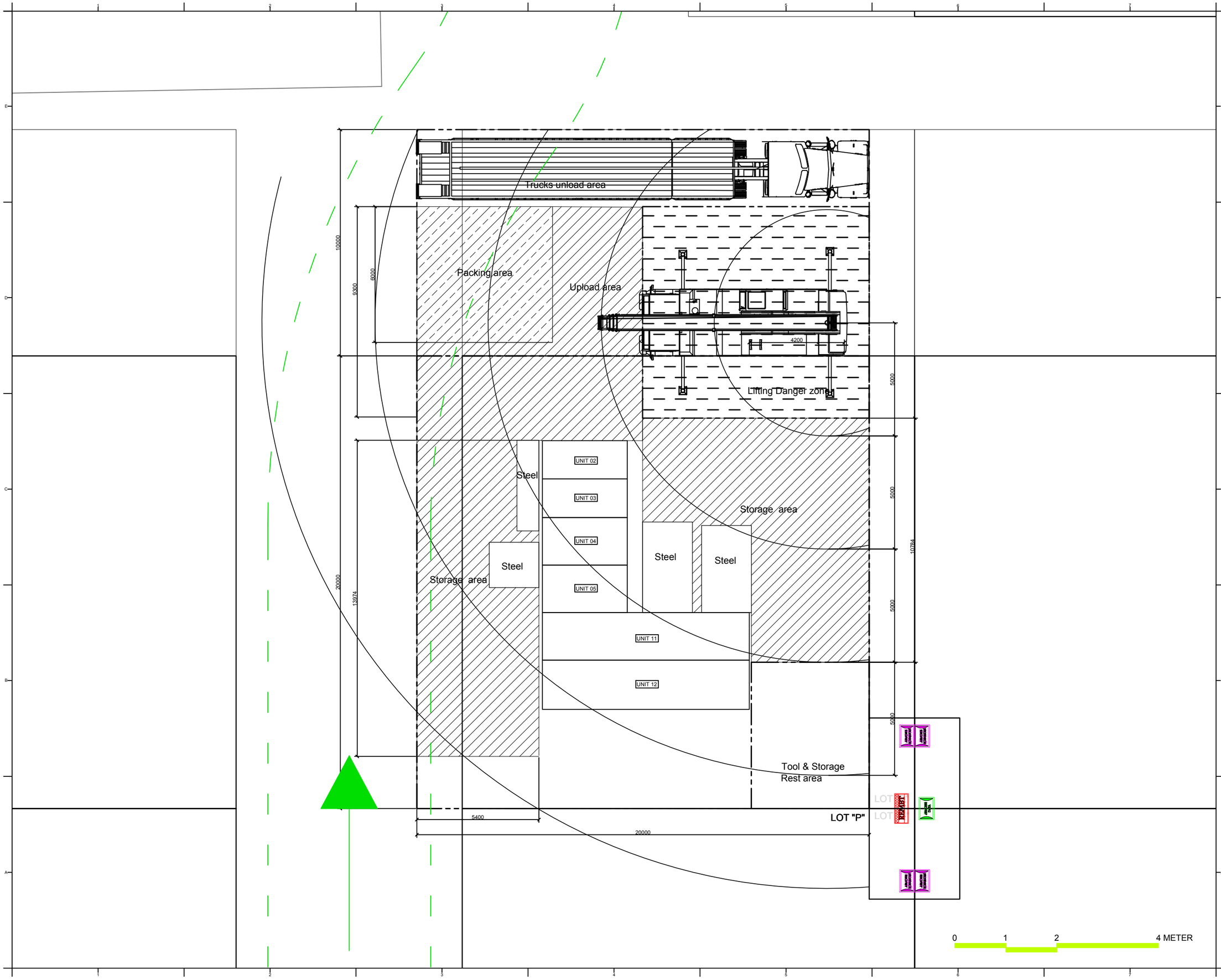

Solar Decathlon Europe

Project: ORCHID HOUSE

Institution: 國立交通大學 National Chiao Tung University

NCTU Architecture 國立交通大學建築研究所

Team Name: NCTU/UNICODE

Address: 1001 Ta-Hsueh Road
Hsinchu City 30010
Taiwan

Contact: www.sde.tw

Consultants:

Note:

Mark	Date	Description
DN	2013/04/01	SD Submission
DN	2013/07/01	DDc Submission
ST	2013/11/01	DD Submission
ST	2014/03/03	CD Submission
ST	2014/04/30	CD Submission
ST	2014/06/02	CD Submission

Drawn by	SC
Checked by	-
Scale	1:150
Unit	mm

DWG. Title

DISASSEMBLY LOTS PLAN
TRUCK 12

DWG. No.	PAGE
SO-510	293

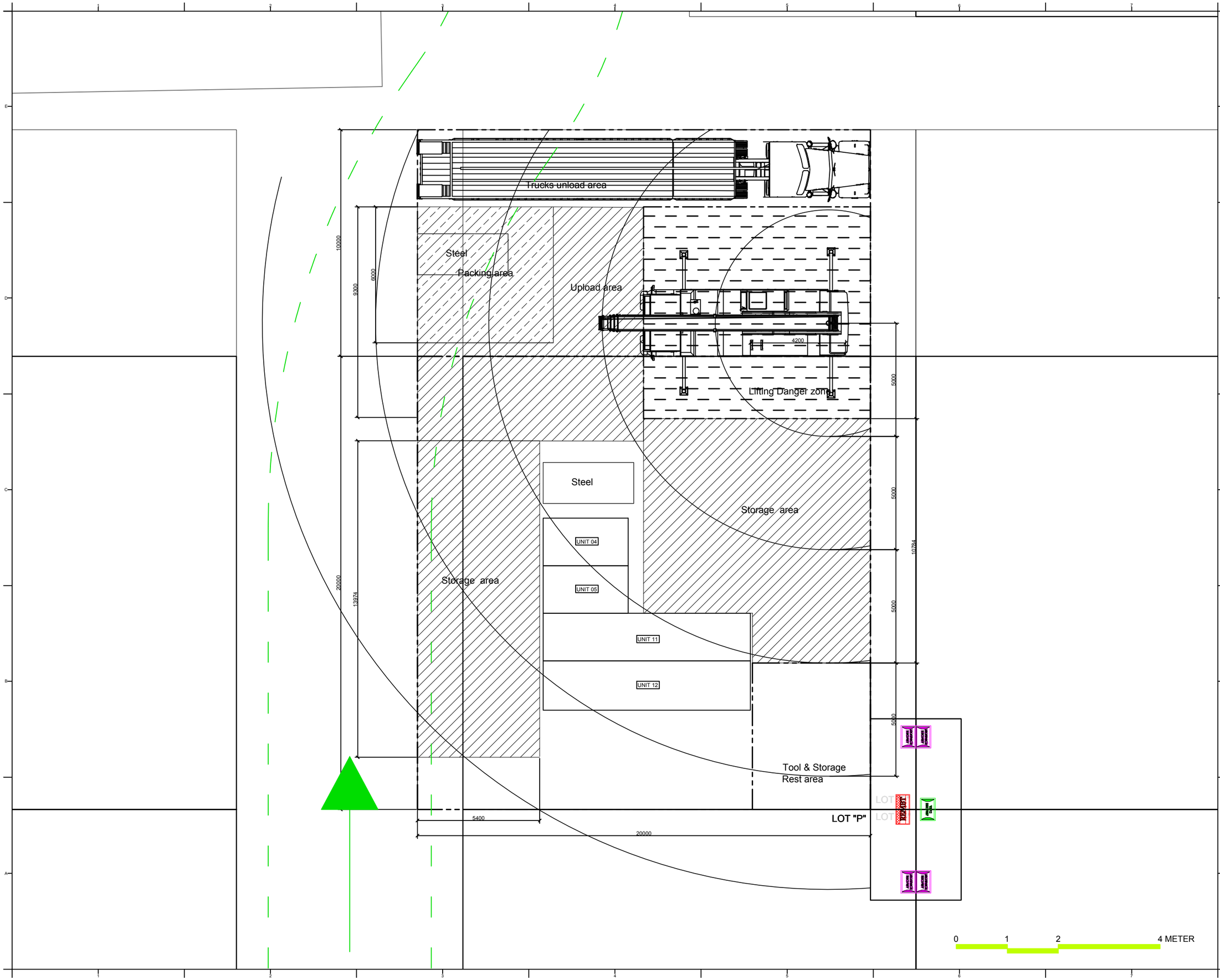

Solar Decathlon Europe

Project: ORCHID HOUSE

Institution: 國立交通大學 National Chiao Tung University

NCTU Architecture 國立交通大學建築研究所

Team Name: NCTU/UNICODE

Address: 1001 Ta-Hsueh Road
Hsinchu City 30010
Taiwan

Contact: www.sde.tw

Consultants:

Note:

Mark	Date	Description
DN	2013/04/01	SD Submission
DN	2013/07/01	DDc Submission
ST	2013/11/01	DD Submission
ST	2014/03/03	CD Submission
ST	2014/04/30	CD Submission
ST	2014/06/02	CD Submission

Drawn by	SC
Checked by	-
Scale	1:150
Unit	mm

DWG. Title

DISASSEMBLY LOTS PLAN
TRUCK 13

DWG. No. SO-511

PAGE 294

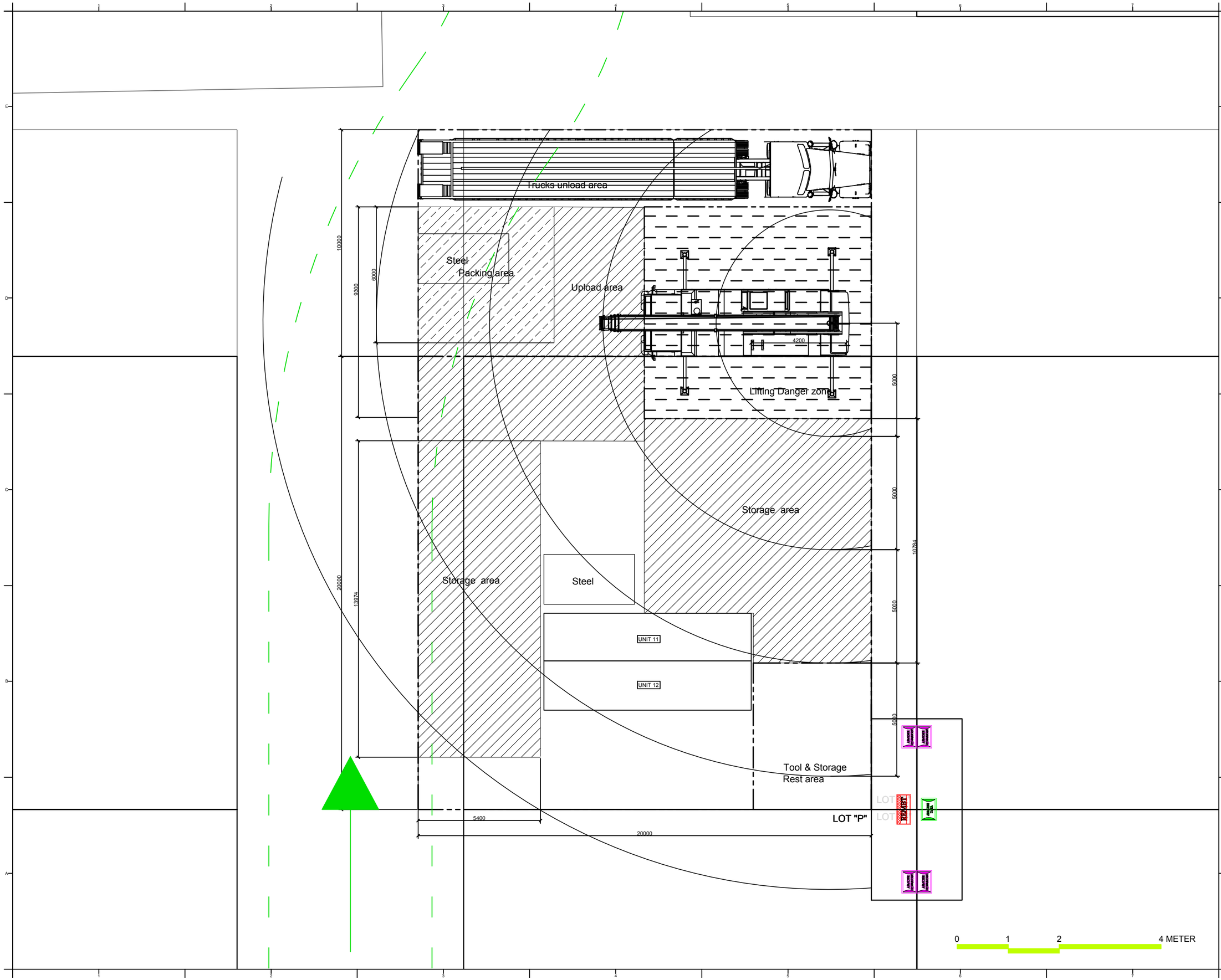

Solar Decathlon Europe

Project:

ORCHID HOUSE

Institution:

國立交通大學 National Chiao Tung University

NCTU Architecture 國立交通大學建築研究所

Team Name: NCTU/UNICODE

Address: 1001 Ta-Hsueh Road
Hsinchu City 30010
Taiwan

Contact: www.sde.tw

Consultants:

Note:

Mark	Date	Description
DN	2013/04/01	SD Submission
DN	2013/07/01	DDc Submission
ST	2013/11/01	DD Submission
ST	2014/03/03	CD Submission
ST	2014/04/30	CD Submission
ST	2014/06/02	CD Submission

Drawn by	SC
Checked by	-
Scale	1:150
Unit	mm

DWG. Title

DISASSEMBLY LOTS PLAN
TRUCK 14

DWG. No. SO-512

PAGE 295

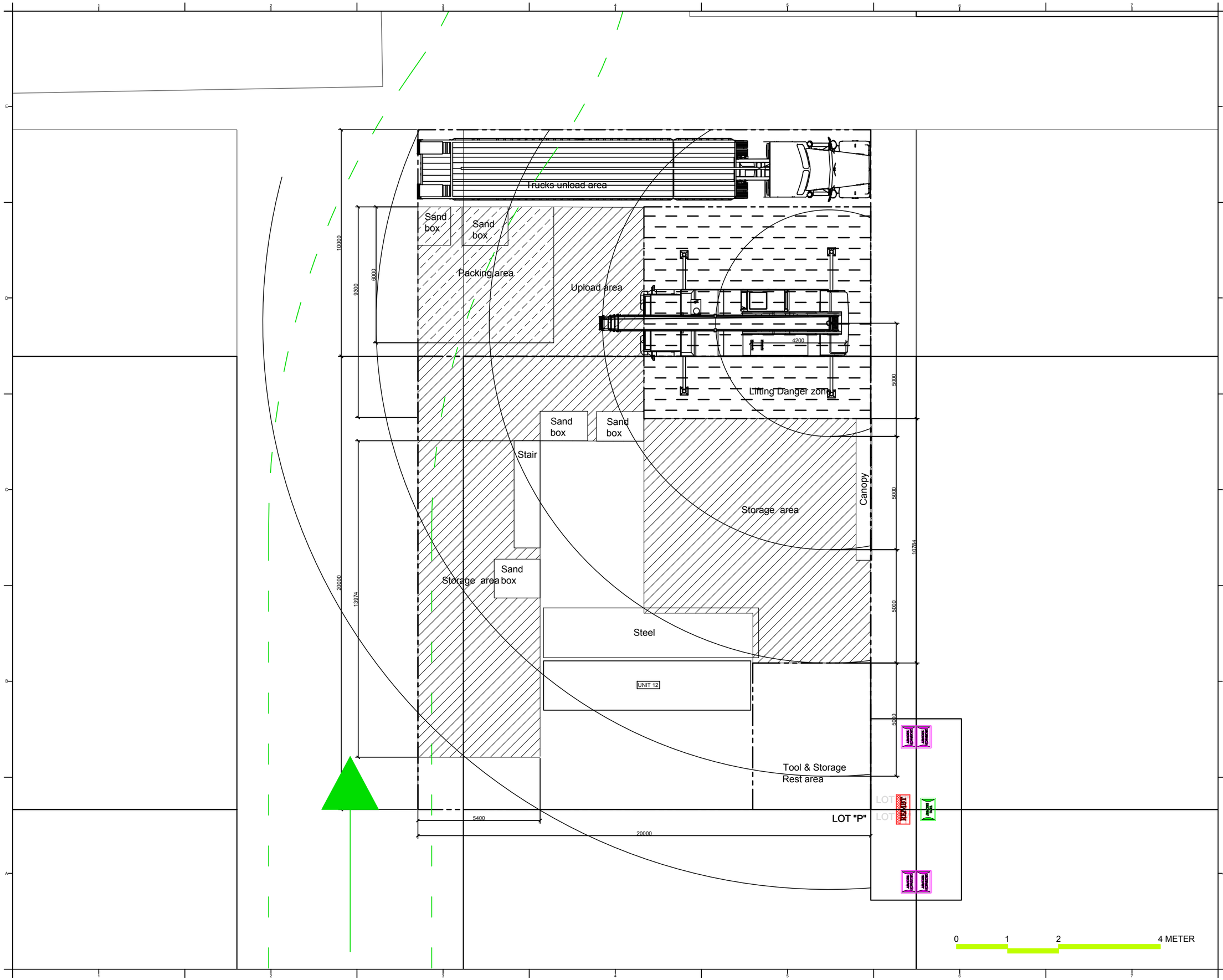

Solar Decathlon Europe

Project: ORCHID HOUSE

Institution: 國立交通大學 National Chiao Tung University

NCTU Architecture 國立交通大學建築研究所

Team Name: NCTU/UNICODE

Address: 1001 Ta-Hsueh Road
Hsinchu City 30010
Taiwan

Contact: www.sde.tw

Consultants:

Note:

Mark	Date	Description
DN	2013/04/01	SD Submission
DN	2013/07/01	DDc Submission
ST	2013/11/01	DD Submission
ST	2014/03/03	CD Submission
ST	2014/04/30	CD Submission
ST	2014/06/02	CD Submission

Drawn by	SC
Checked by	-
Scale	1:150
Unit	mm

DWG. Title

DISASSEMBLY LOTS PLAN
TRUCK 15 & 16

DWG. No. SO-513

PAGE 296

VEHICLE ACCESS TO LOT

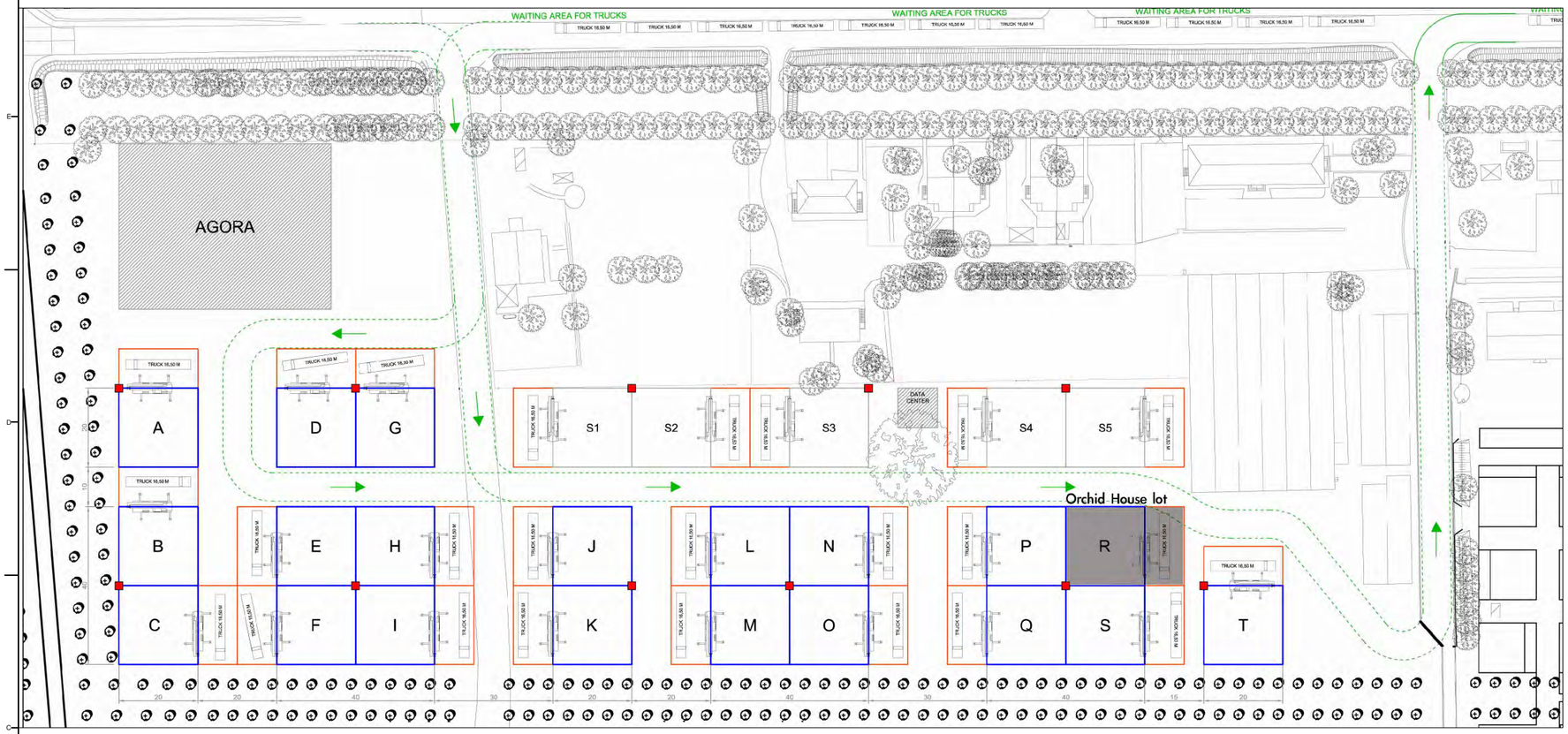

SITE DESCRIPTION

Lot number: R

Lot size: 20 x 20 m (400m^2)

Elements around the lot:
-Our lot situated near the main path export
-The track route overwraps with our loading/ unloading area

ROUTE TO THE NEAREST HOSPITAL

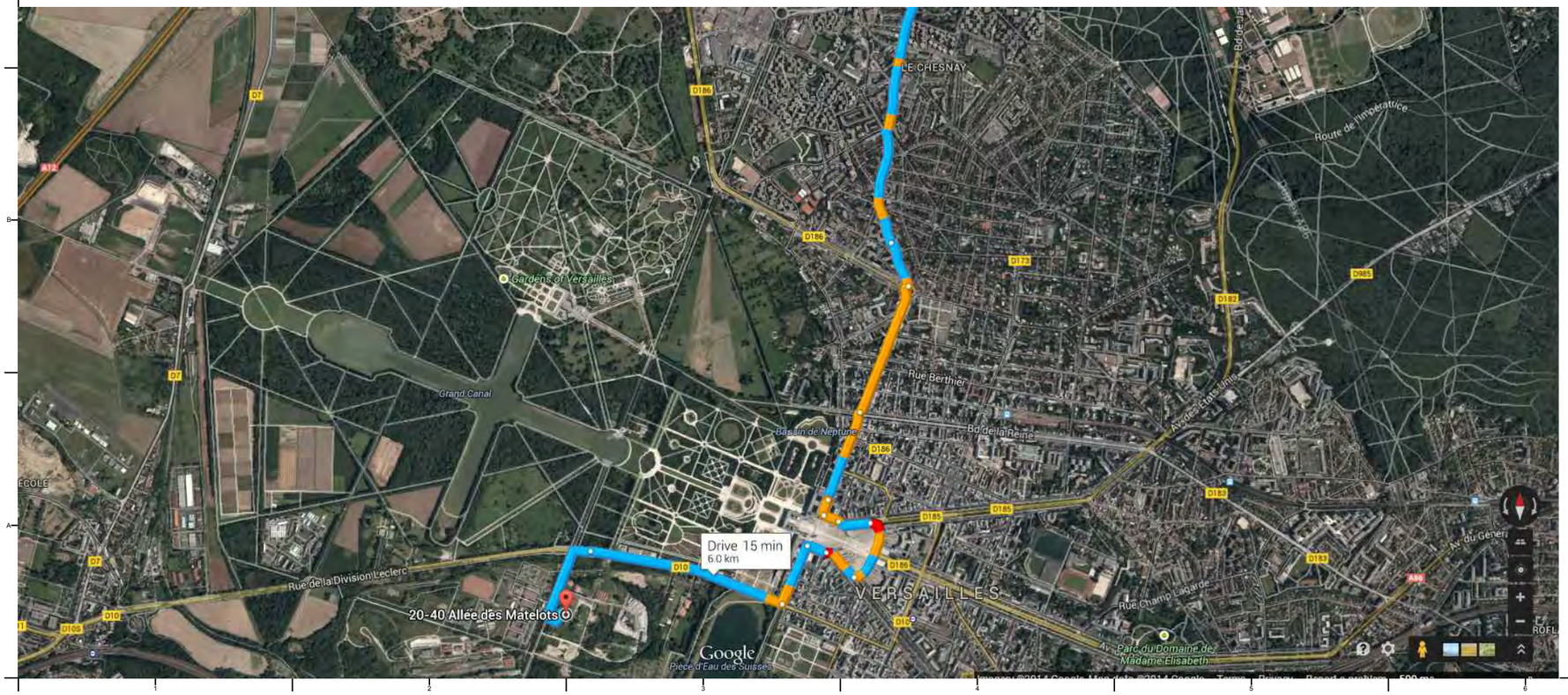

A: La Cite du Soleil

-Head south on "Allée des Matelots"
-Turn right to stay on "Allée des Matelots"
-Turn right onto "D10"
-Turn left onto "Rue de l'Indépendance Américaine"
-Continue onto "Rue Saint-Julien"
-Turn left onto "Rue des Récollets"
-Turn right onto "Av. Nepveu Sud"
-Slight left onto "Av. Rockefeller"
-Continue onto "Rue Hoche/D186"
-Continue onto "Rue Carnot"
-Keep right to stay on "Rue Carnot"
-Slight right onto "Rue des Réservoirs"
-At the roundabout, take the 2nd exit onto "Bd du Roi/D186"
-At the roundabout, take the 4th exit onto "Rue de Versailles"
-Keep left to stay on "Rue de Versailles"
-At the roundabout, take the 4th exit

Distance: 6 km , 15 mins

B: 177 Rue de Versailles
Address: 177 Rue de Versailles,
78150 Le Chesnay, France

Tel.: 01.39.63.91.33

Solar Decathlon Europe

Project: ORCHID HOUSE

Institution: 國立交通大學 National Chiao Tung University

NCTU Architecture 國立交通大學建築研究所

Team Name: NCTU/UNICODE
Address: 1001 Ta-Hsueh Road
Hsinchu City 30010
Taiwan
Contact: www.sde.tw

Consultants:

Note:

N

Mark	Date	Description
DN	2013/04/01	SD Submission
DN	2013/07/01	DDc Submission
ST	2013/11/01	DD Submission
ST	2014/03/03	CD Submission
ST	2014/04/30	CD Submission
ST	2014/06/02	CD Submission

Drawn by	LC
Checked by	DN
Scale	-
Unit	-

DWG. Title
HEALTH AND SAFETY IN THE LOT AND SURROUNDINGS 1

DWG. No. HS-001

PAGE 297

ROUTE TO THE NEAREST POLICE OFFICE

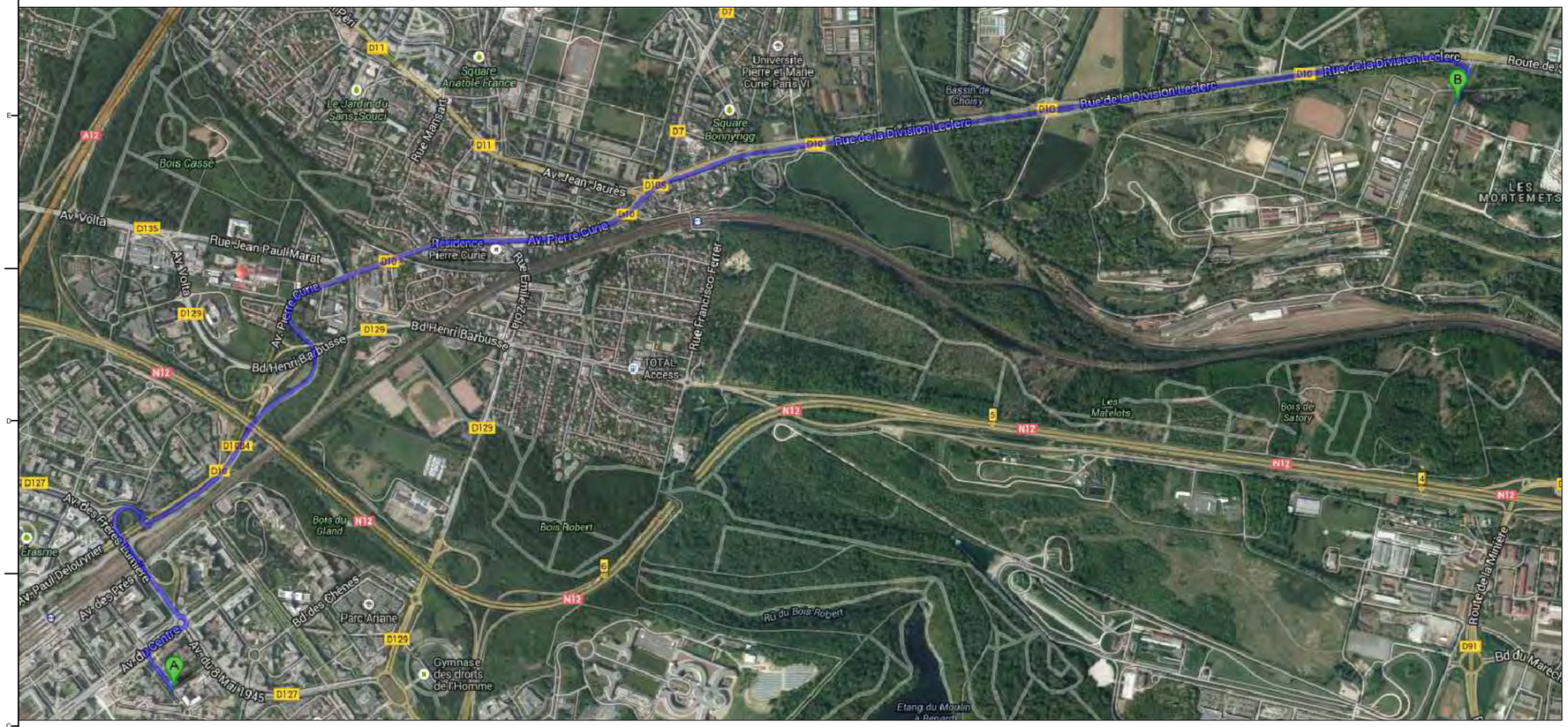

A: La Cite du Soleil

-Head northeast on Allée des Matelotstoward D10

-Turn left onto D10

-Slight right onto Av. de la Division Leclerc/D10

-At the roundabout, take the 1st exit onto the Av. des Frères Lumière/D127 ramp

- Keep left at the fork, follow signs for D127/Guyancourt/Quartier saint quentin

-Turn left onto Av. des Frères Lumière/D127

-Turn right onto Rue de la Division Leclerc

Distance: 5.8km , 9 mins

B: Commissariat de Police

Address: 1 Rue de la Division Leclerc
8280 Guyancourt, France

ROUTE TO THE FIRE STATION

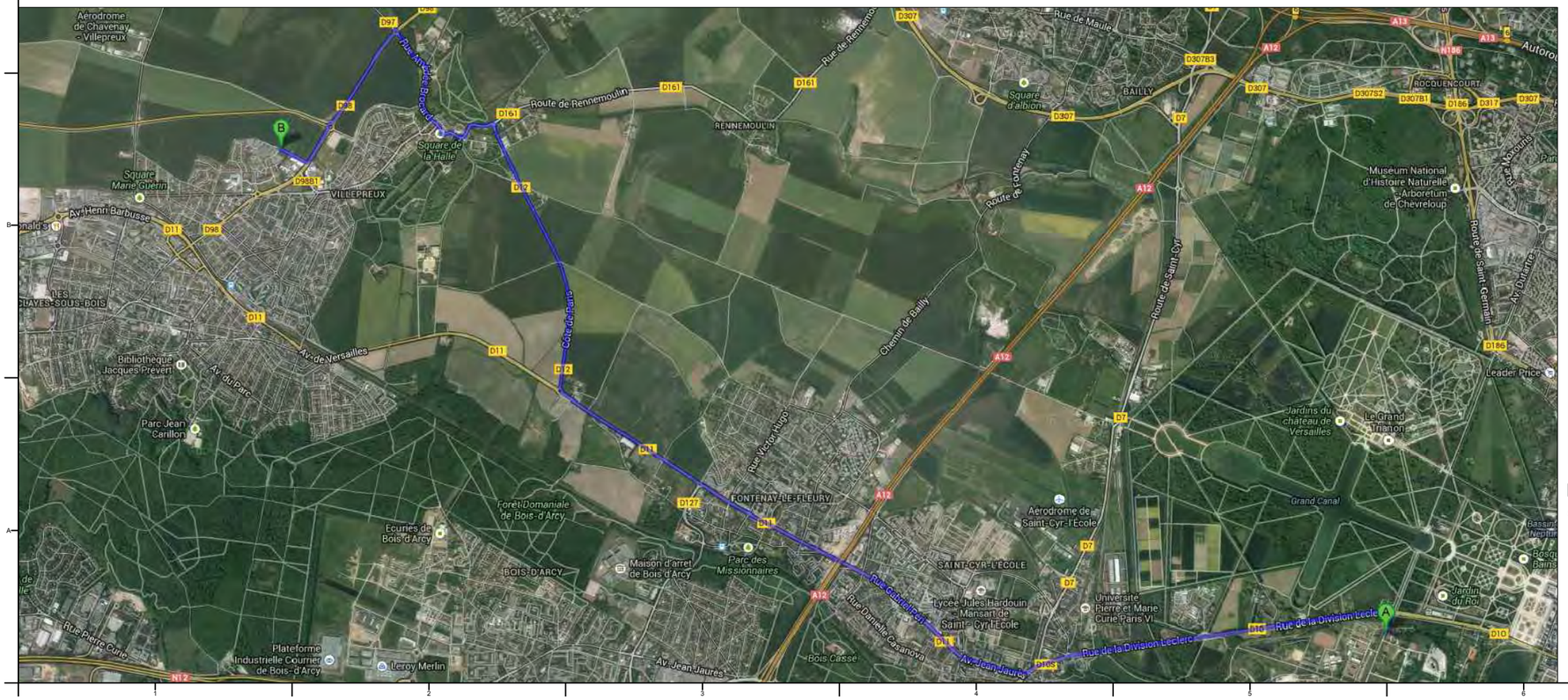

A: La Cite du Soleil

-Head northeast on Allée des Matelotstoward D10

-Turn left onto D10

-Slight right onto Av. de la Division Leclerc/D10

-Turn right onto Av. Jean Jaurès/D11 Continue to follow D11

-At the roundabout, take the 2nd exit ontoRue Jules Massenet/D98

-Turn left onto D98

Distance: 11.3km , 18 mins

B: Sapeurs Pompiers des Yvelines

Address: Avenue de Pépinière
78450 Villepreux, France

Solar Decathlon Europe

Project: ORCHID HOUSE

Institution: 國立交通大學 National Chiao Tung University

NCTU Architecture 國立交通大學建築研究所

Team Name: NCTU/UNICODE

Address: 1001 Ta-Hsueh Road
Hsinchu City 30010
Taiwan

Contact: www.sde.tw

Consultants:

Note:

N

Mark	Date	Description
DN	2013/04/01	SD Submission
DN	2013/07/01	DDc Submission
ST	2013/11/01	DD Submission
ST	2014/03/03	CD Submission
ST	2014/04/30	CD Submission
ST	2014/06/02	CD Submission

Drawn by	LC
Checked by	DN
Scale	
Unit	-

DWG. Title: HEALTH AND SAFETY IN THE LOT AND SURROUNDINGS 2

DWG. No. HS-002

PAGE 298

TRUCKS ROUTE FROM "Le Havre" TO "La Cite du Soleil"

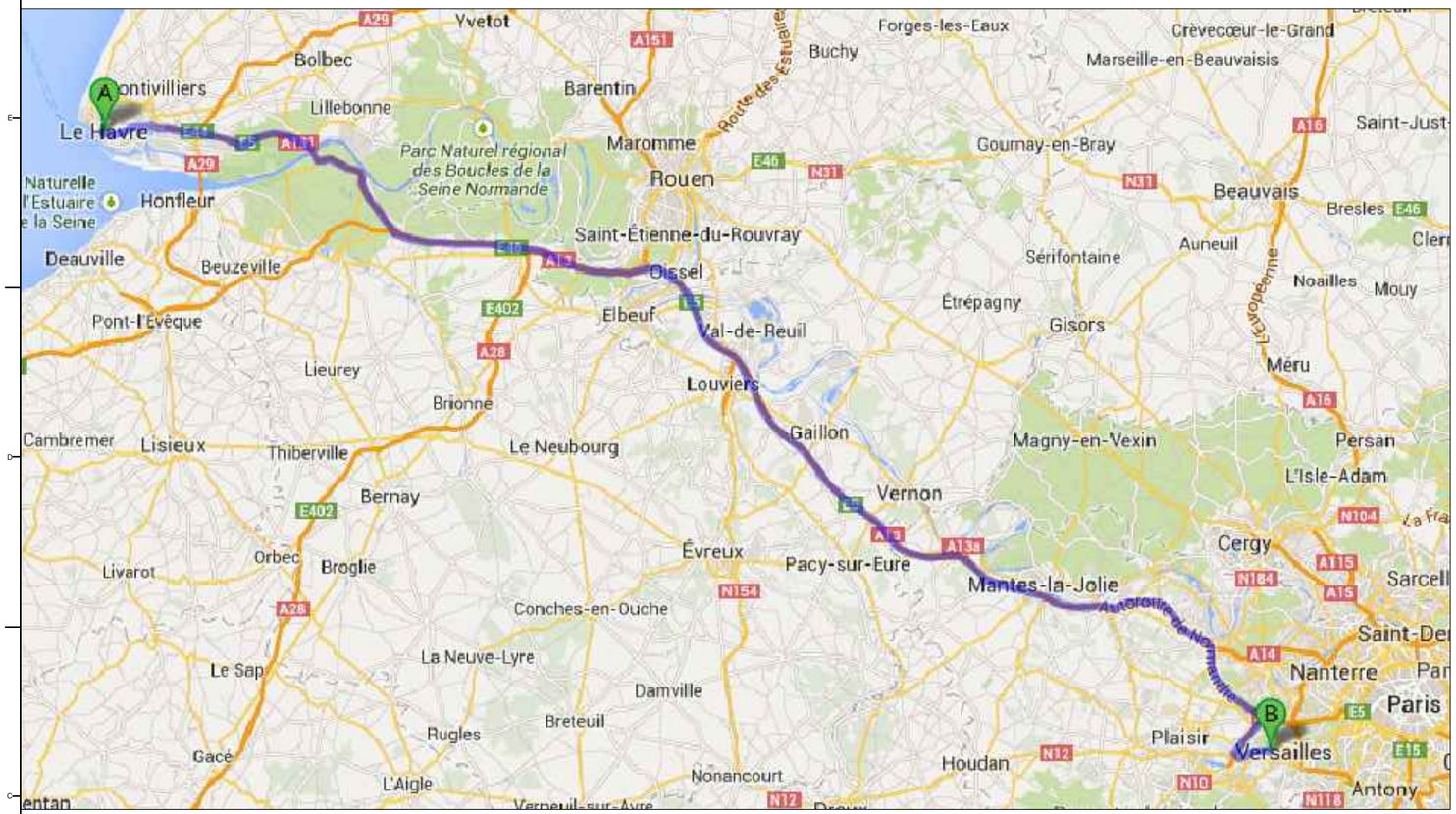

A: LE HAVRE

-Head west on Av. du Général Leclerc toward Pl. de l'Hôtel de ville

-Take the 1st left onto Pl. de l'Hôtel de ville

-Turn right onto Bd de Strasbourg

-Continue onto Cours Lafayette

-Continue onto Quai Colbert

-Slight left onto D6015

-Keep left to stay on D6015

-Continue onto N282

-Continue onto A131

-At the roundabout, take the 3rd exit onto N182

-Slight left onto E5

- Continue onto A131/E5

-Merge onto A13/E5

-Take the exit onto A12 toward Saint-Quentin-en-Yvelines

-Take the exit toward Évry/Lyon/Dreux/Saint-Quentin-en-Yvelines/Bois-D'Arcy/Versailles-Satory

-Keep right at the fork, follow signs for Saint-Cyr-l'École

-Turn left onto D129

-Slight right onto Av. Volta/D129 Continue to follow D129

-At the roundabout, take the 3rd exit onto Rue Emile Zola

-Turn right onto Av. Pierre Curie/D10

- Slight right to stay on Av. Pierre Curie/D10

-Turn right onto Allée des Matelots

Distance: 191 km, 1 hour 56mins

B:La Cite du Soleil

PROBLEM	RISKS	ADOPTED MEASURES
Dangers caused by weather	Heavy rain due to slippery floors	Drive slowly
Traffic problem during shipping	Traffic jam due to spent more time	To do another preparation during waiting for trucks
Road contruction	Road blocked	Plan B (other route)
Complex traffic system	Get lost	Arrange the route clearly before departure

Solar Decathlon Europe

Project: ORCHID HOUSE

Institution: 國立交通大學 National Chiao Tung University

NCTU Architecture 國立交通大學建築研究所

Team Name: NCTU/UNICODE
Address: 1001 Ta-Hsueh Road Hsinchu City 30010 Taiwan
Contact: www.sde.tw

Consultants:

Note:

Mark	Date	Description
DN	2013/04/01	SD Submission
DN	2013/07/01	DDc Submission
ST	2013/11/01	DD Submission
ST	2014/03/03	CD Submission
ST	2014/04/30	CD Submission
ST	2014/06/02	CD Submission

Drawn by: LC
Checked by: DN
Scale:
Unit: -

DWG. Title: HEALTH AND SAFETY DURING THE OUTSIDE LOGISTIC

DWG. No. HS-101

SITE VIEW

PROBLEM	RISKS	ADOPTED MEASURES
Dangers caused by weather	Ground subsidence Getting stuck of heavy equipment Getting stuck of heavy components	Provision of lifting devices Support plates for heavy vehicles' legs
Dangers due to the great number of people on shipping to the site	Unclear arrangement danger of injury increases	No access for unauthorized persons Access only in coordination with construction/shift supervisor High visibility vest in compliance with the color scheme required by site operations for every person entering construction site
Too many access possibilities to the lot	Unclear arrangement danger of unauthorized access	Security officers for control Site fence Clearly marked pedestrian access to construction site
Too small distances from lot and trees/ plants	Obstruction of vehicle' movements Obstructions due to small distances between construction grounds Obstruction of vehicle' movements	No changes possible - steady crane - site fence - unloading/loading materials in the storage area inside the lot - unauthorized and external persons who invade the lot
Ground limitations	Obstruction / limitations through on-site security installations	Securing existing escape routes No dangerous works close to this area

Solar Decathlon Europe

Project: ORCHID HOUSE

Institution: 國立交通大學 National Chiao Tung University

NCTU Architecture 國立交通大學建築研究所

Team Name: NCTU/UNICODE

Address: 1001 Ta-Hsueh Road
Hsinchu City 30010
Taiwan

Contact: www.sde.tw

Consultants:

Note:

Mark	Date	Description
DN	2013/04/01	SD Submission
DN	2013/07/01	DDc Submission
ST	2013/11/01	DD Submission
ST	2014/03/03	CD Submission
ST	2014/04/30	CD Submission
ST	2014/06/02	CD Submission

Drawn by: LC

Checked by: DN

Scale:

Unit: -

DWG. Title: HEALTH AND SAFETY DURING THE INSIDE LOGISTIC

DWG. No.: HS-201

PAGE: 300

THE SAFETY PLAN AND COORDINATION PHASE

Plan of site

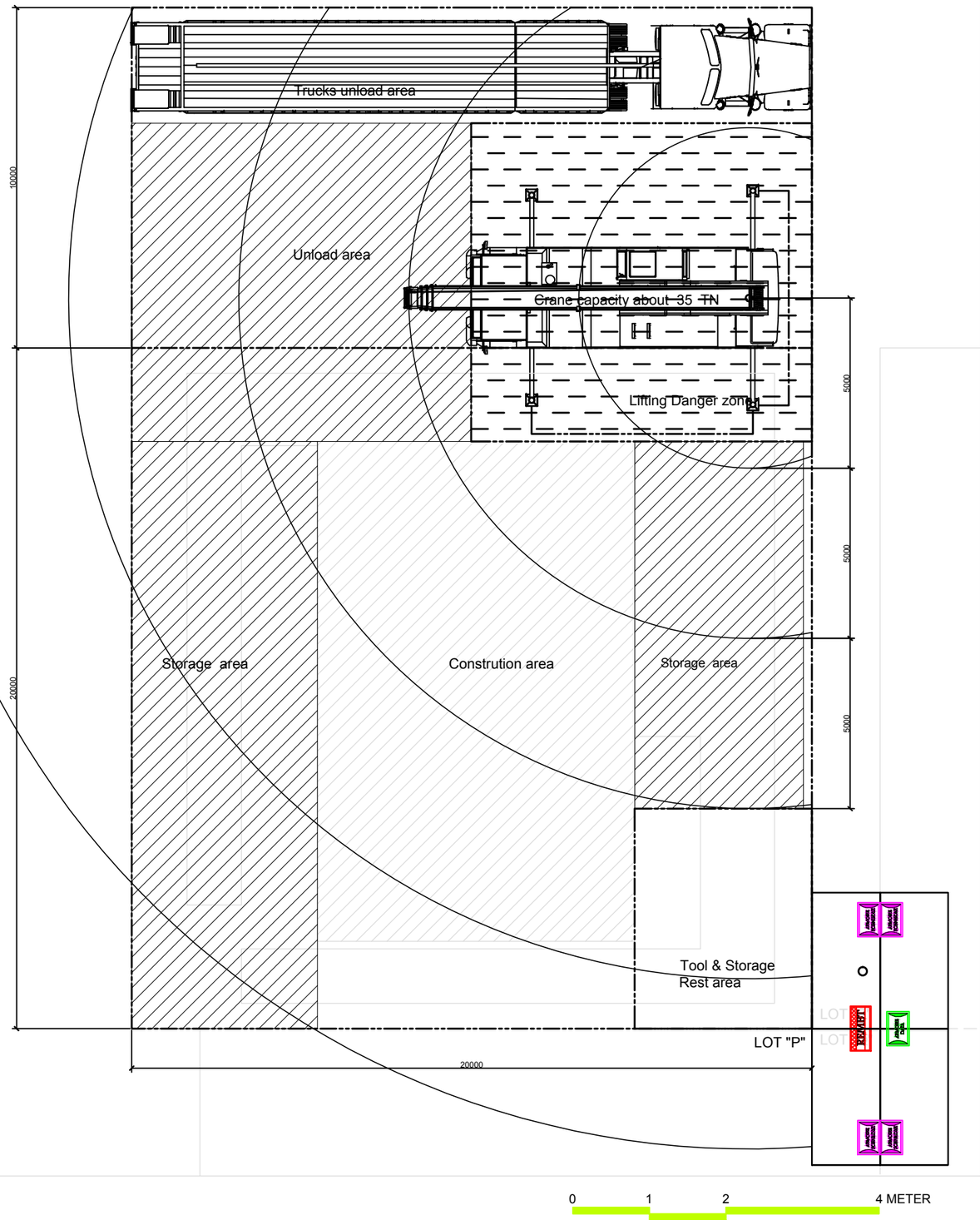

PROBLEM	RISKS	ADOPTED MEASURES
Too small property lines	Collision with other people Collision with parts stored Discomfort to the maneuvers	Marking dangerous parts stored High visibility vests Guiding gear during maneuvers with two pedestrians Designing a delivery zone
Dangers due to the great number of people in the site	Increased dangers of injury muddle	High visibility vest Denial of access to other people
Trucks passway	Pass by operation area	Arrange signpostings
Heavy rain or rain of long-term	Degradation of the land Electric shock due to humidity	Use anti-slide mats on slipping surfaces Regularly remove water from the foor with scrapers Replacement of defective cables Waterproof plugs Protective clothes
Ground limitations	Obstruction / limitations through on-site security installations	Securing existing escape routes No dangerous works close to this area
Traffic and parking of the crane or a truck	Shock, collisions with pedestrians, existing equipment or vehicle Falling objects transported	Respect the rules of the road Parking places reserved for this purpose Lash with appropriate means and in sufficient number

Solar Decathlon Europe

Project: ORCHID HOUSE

Institution: 國立交通大學 National Chiao Tung University

NCTU Architecture 國立交通大學建築研究所

Team Name: NCTU/UNICODE
Address: 1001 Ta-Hsueh Road Hsinchu City 30010 Taiwan
Contact: www.sde.tw

Consultants:

Note:

Mark	Date	Description
DN	2013/04/01	SD Submission
DN	2013/07/01	DDc Submission
ST	2013/11/01	DD Submission
ST	2014/03/03	CD Submission
ST	2014/04/30	CD Submission
ST	2014/06/02	CD Submission

Drawn by	LC
Checked by	DN
Scale	1:150
Unit	mm

DWG. Title: HEALTH AND SAFETY DURING LOAD / UNLOAD

DWG. No. HS-301

PAGE 301

Fall because of barriers

Fall of objects

Forklift way

Warning

Loading area

Don't stand under forklift

Authorized personnel only

Don't made fire

Don't run on worksite

Don't pass under load

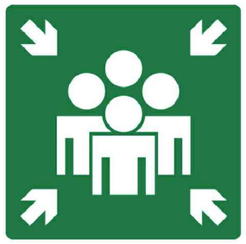

First aid kit

Point of ressemblement

Fire extinguisher

Solar Decathlon Europe

Project: ORCHID HOUSE

Institution: 國立交通大學 National Chiao Tung University

NCTU Architecture 國立交通大學建築研究所

Team Name: NCTU/UNICODE

Address: 1001 Ta-Hsueh Road
Hsinchu City 30010
Taiwan

Contact: www.sde.tw

Consultants:

Note:

Mark	Date	Description
DN	2013/04/01	SD Submission
DN	2013/07/01	DDc Submission
ST	2013/11/01	DD Submission
ST	2014/03/03	CD Submission
ST	2014/04/30	CD Submission
ST	2014/06/02	CD Submission

Drawn by	LC
Checked by	DN
Scale	-
Unit	-

DWG. Title: HEALTH AND SAFETY SIGNPOSTING

DWG. No.: HS-302

PAGE: 275

Solar Decathlon Europe

Project: ORCHID HOUSE

Institution: 國立交通大學 National Chiao Tung University

NCTU Architecture 國立交通大學建築研究所

Team Name: NCTU/UNICODE

Address: 1001 Ta-Hsueh Road
Hsinchu City 30010
Taiwan

Contact: www.sde.tw

Consultants:

Note:

Mark	Date	Description
DN	2013/04/01	SD Submission
DN	2013/07/01	DDc Submission
ST	2013/11/01	DD Submission
ST	2014/03/03	CD Submission
ST	2014/04/30	CD Submission
ST	2014/06/02	CD Submission

Drawn by	LC
Checked by	DN
Scale	-
Unit	-

DWG. Title
HEALTH AND SAFETY
PPE

DWG. No. HS-303

PAGE 276

Where the worker are:
On the ground

ALL SAFETY RULES MUST BE FOLLOWED

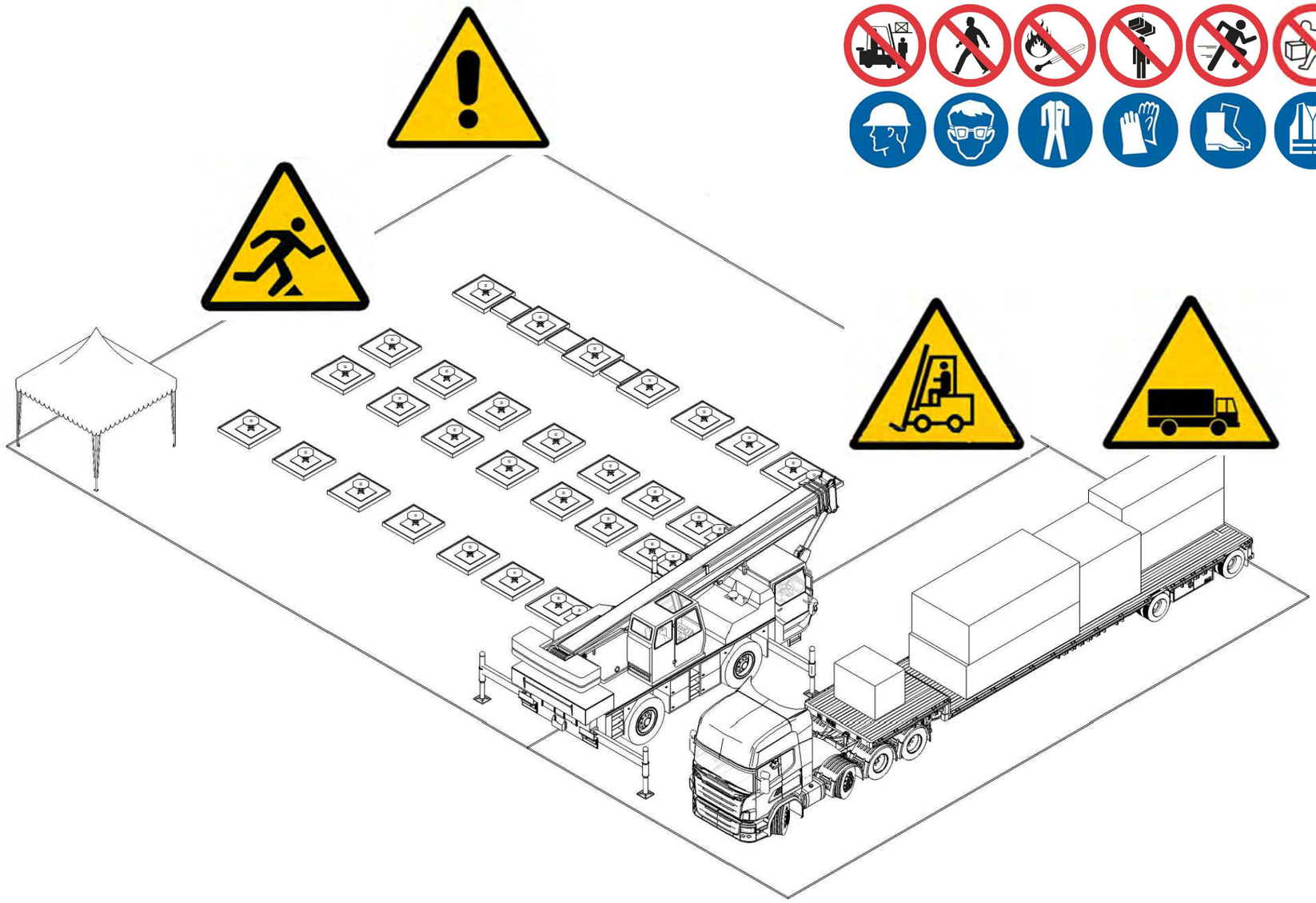

Footing Lofting Phase

Step	1	2	3	4	5	6	7	8	9
Work Deatail	Datum Point	Spacing	Sand Box	Coordinate positioning	Horizontal correction				
Woker	6	4	4	6	4				
Note									

Solar Decathlon Europe

Project: ORCHID HOUSE

Institution: 國立交通大學 National Chiao Tung University

NCTU Architecture 國立交通大學建築研究所

Team Name: NCTU/UNICODE
Address: 1001 Ta-Hsueh Road Hsinchu City 30010 Taiwan
Contact: www.sde.tw

Consultants:

Note:

Mark	Date	Description
DN	2013/04/01	SD Submission
DN	2013/07/01	DDc Submission
ST	2013/11/01	DD Submission
ST	2014/03/03	CD Submission
ST	2014/04/30	CD Submission
ST	2014/06/02	CD Submission

Drawn by: MS
Checked by: DN
Scale: -
Unit: -

DWG. Title: ASSEMBLY PHASE 1

DWG. No.: HS-401

PAGE: 304

Where the worker are:
On the ground On the mezzanine floor
On the Floor

ALL SAFETY RULES MUST BE FOLLOWED

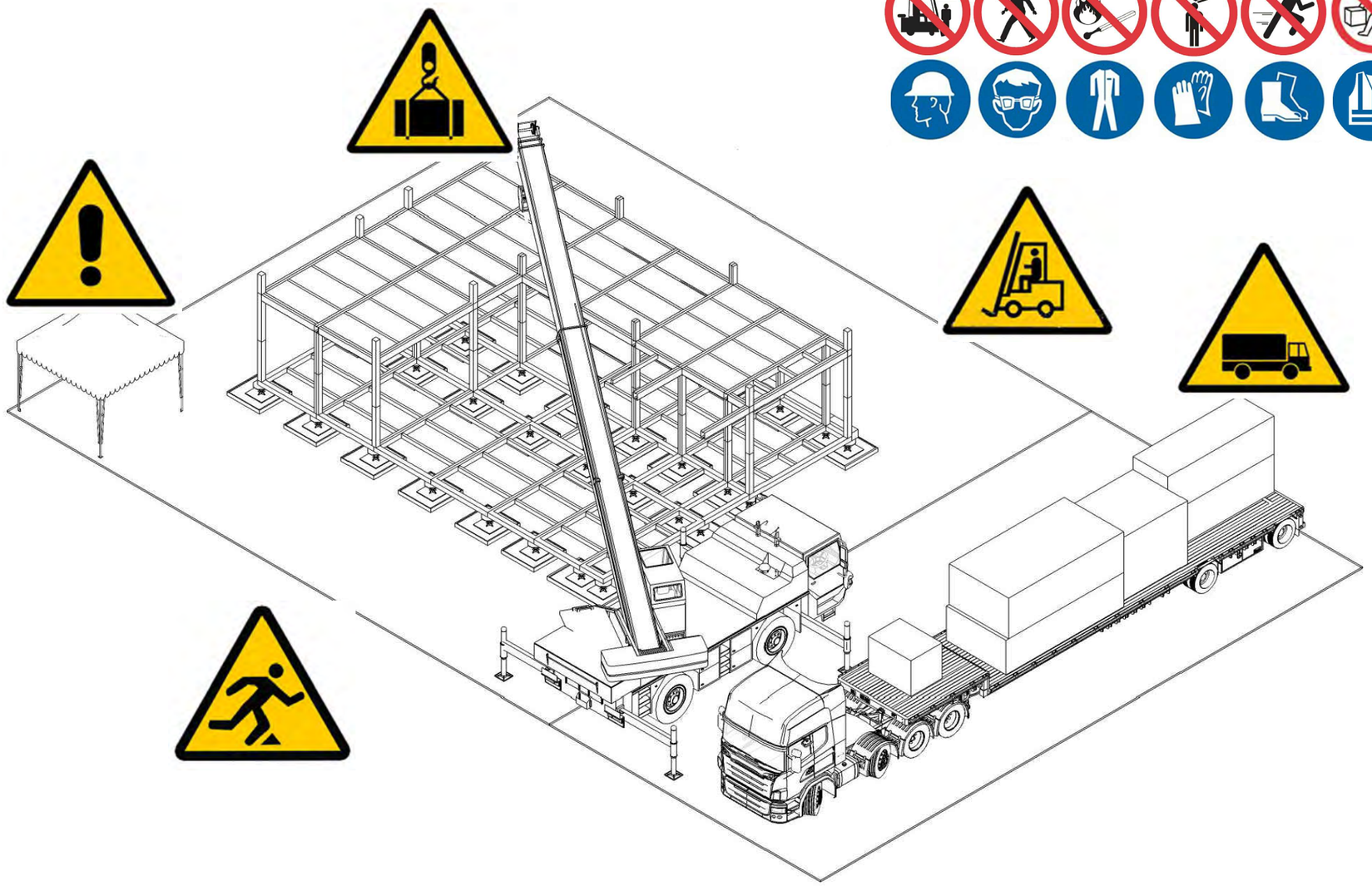

Modular Unit Phase

Step	1	2	3	4	5	6	7	8	9
Work Deatail	Modular Unit 1~5 Modular Unit 11~12	M.E.P Ststem Under Unit	Unit combination	Building positioning correction					
Woker	8	4	4	6					
Note									

Solar Decathlon Europe

Project: ORCHID HOUSE

Institution: 國立交通大學 National Chiao Tung University

NCTU Architecture 國立交通大學建築研究所

Team Name: NCTU/UNICODE
Address: 1001 Ta-Hsueh Road
Hsinchu City 30010
Taiwan
Contact: www.sde.tw

Consultants:

Note:

Mark	Date	Description
DN	2013/04/01	SD Submission
DN	2013/07/01	DDc Submission
ST	2013/11/01	DD Submission
ST	2014/03/03	CD Submission
ST	2014/04/30	CD Submission
ST	2014/06/02	CD Submission

Drawn by MS
Checked by DN
Scale -
Unit -

DWG. Title
ASSEMBLY PHASE 2

DWG. No. HS-402
PAGE 305

Where the worker are:

On the ground
On the mezzanine floor
On the Floor

ALL SAFETY RULES MUST BE FOLLOWED

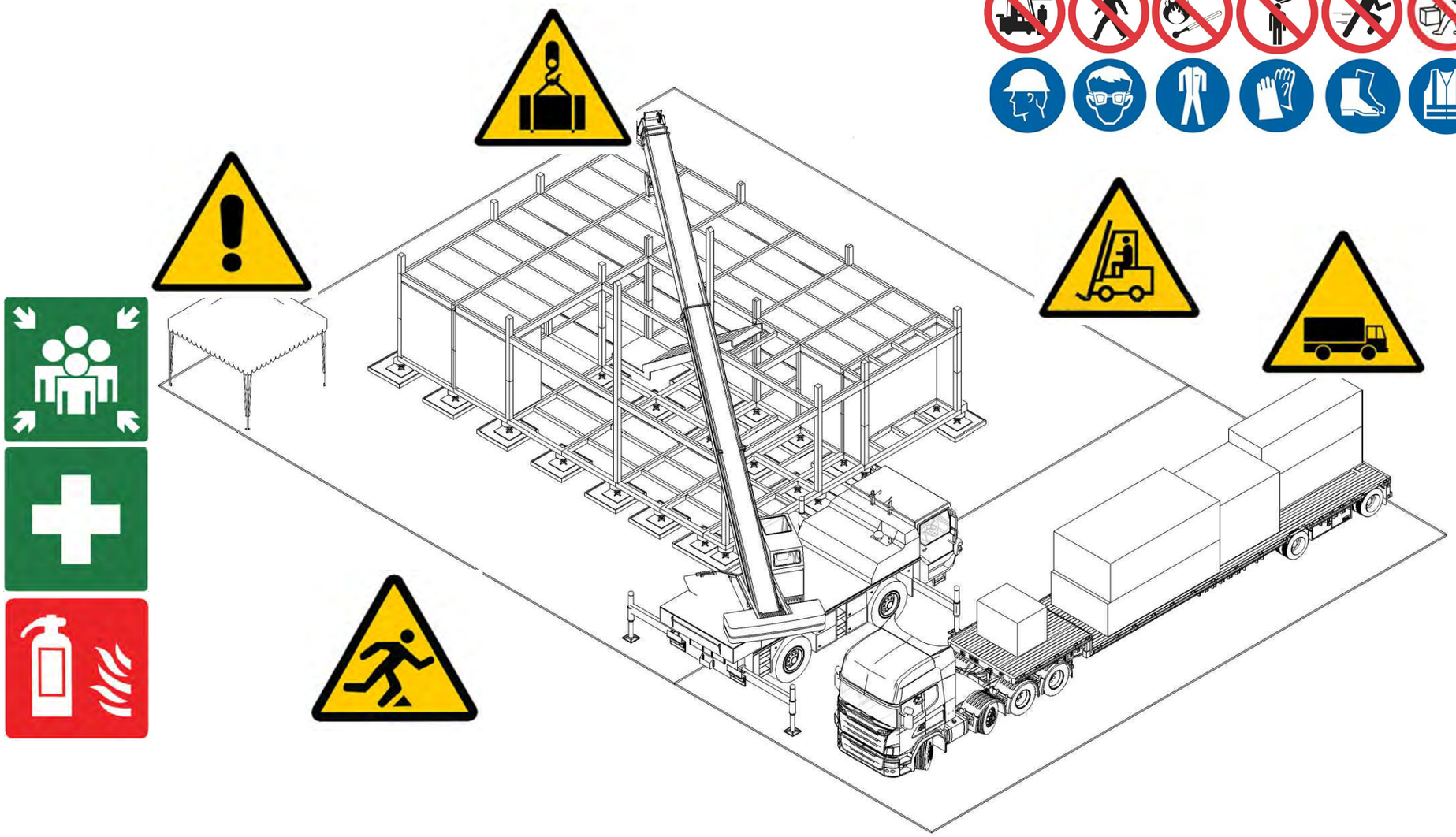

Main Structure & Interior Insulation & M.E.P System Phase

Step	1	2	3	4	5	6	7	8	9
Work Deatail	Stair Unit and Terrace Unit Assembly and Lifting	Interior Insulation Assembly	M.E.P System Tube and trunking	Interior Upper Floor Insulation					
Woker	5	4	4	6					
Note									

Solar Decathlon Europe

Project: ORCHID HOUSE

Institution: 國立交通大學 National Chiao Tung University

NCTU Architecture 國立交通大學建築研究所

Team Name: NCTU/UNICODE
Address: 1001 Ta-Hsueh Road Hsinchu City 30010 Taiwan
Contact: www.sde.tw

Consultants:

Note:

Mark	Date	Description
DN	2013/04/01	SD Submission
DN	2013/07/01	DDc Submission
ST	2013/11/01	DD Submission
ST	2014/03/03	CD Submission
ST	2014/04/30	CD Submission
ST	2014/06/02	CD Submission

Drawn by: MS
Checked by: DN
Scale: -
Unit: -

DWG. Title: ASSEMBLY PHASE 3

DWG. No.: HS-403

PAGE: 306

Where the worker are:
On the ground
On the mezzanine floor
On the Floor

ALL SAFETY RULES MUST BE FOLLOWED

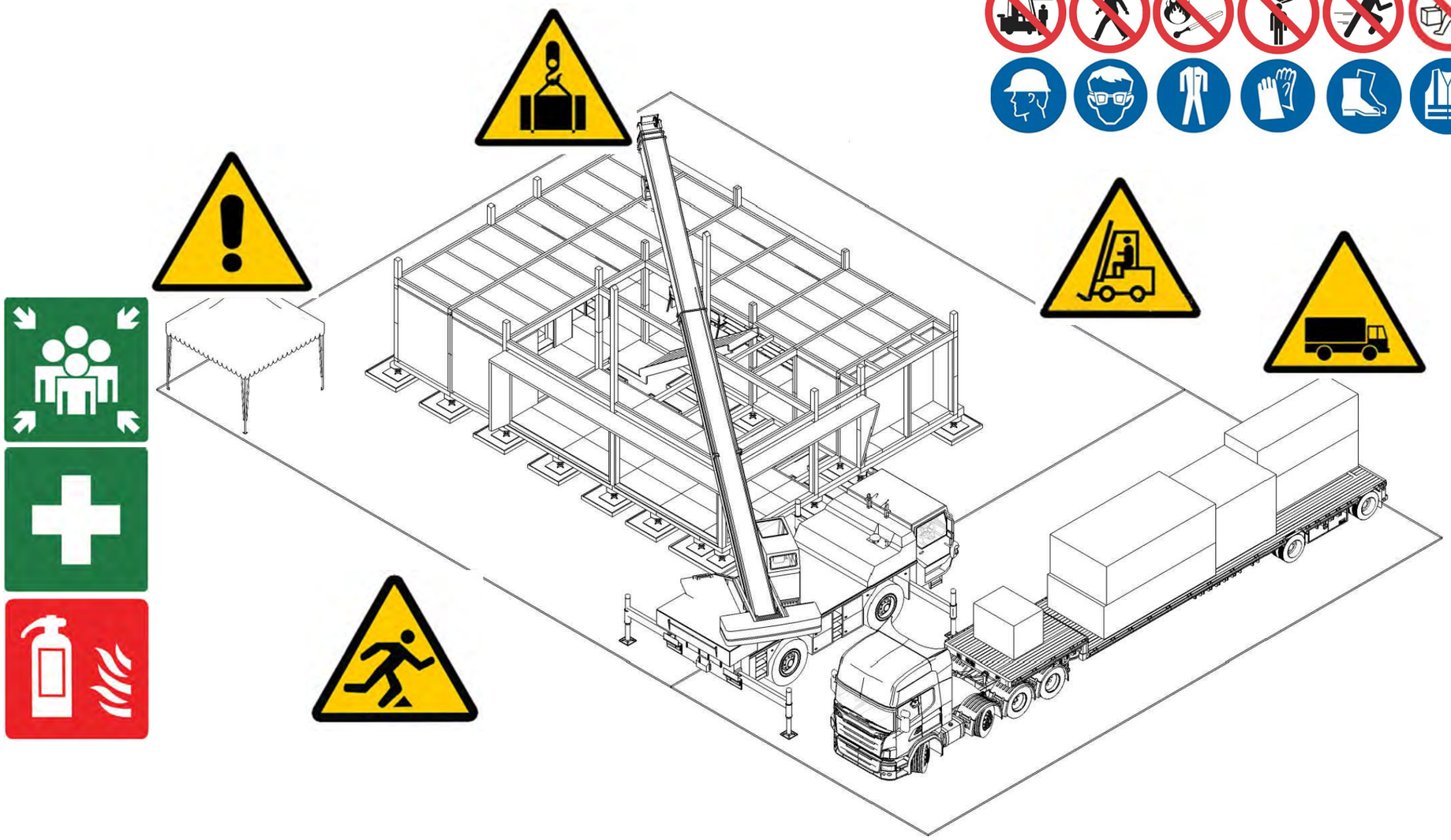

Additional components & M.E.P System Shaft Phase

Step	1	2	3	4	5	6	7	8	9
Work Deatail	Additional components	M.E.P System Shaft							
Woker	6	4							
Note									

Solar Decathlon Europe

Project: ORCHID HOUSE

Institution: 國立交通大學 National Chiao Tung University

NCTU Architecture 國立交通大學建築研究所

Team Name: NCTU/UNICODE
Address: 1001 Ta-Hsueh Road
Hsinchu City 30010
Taiwan
Contact: www.sde.tw

Consultants:

Note:

Mark	Date	Description
DN	2013/04/01	SD Submission
DN	2013/07/01	DDc Submission
ST	2013/11/01	DD Submission
ST	2014/03/03	CD Submission
ST	2014/04/30	CD Submission
ST	2014/06/02	CD Submission

Drawn by: MS
Checked by: DN
Scale: -
Unit: -

DWG. Title: ASSEMBLY PHASE 4

DWG. No.: HS-404

PAGE: 307

Where the worker are:

On the ground — On the mezzanine floor

On the Floor — On the roof

ALL SAFETY RULES MUST BE FOLLOWED

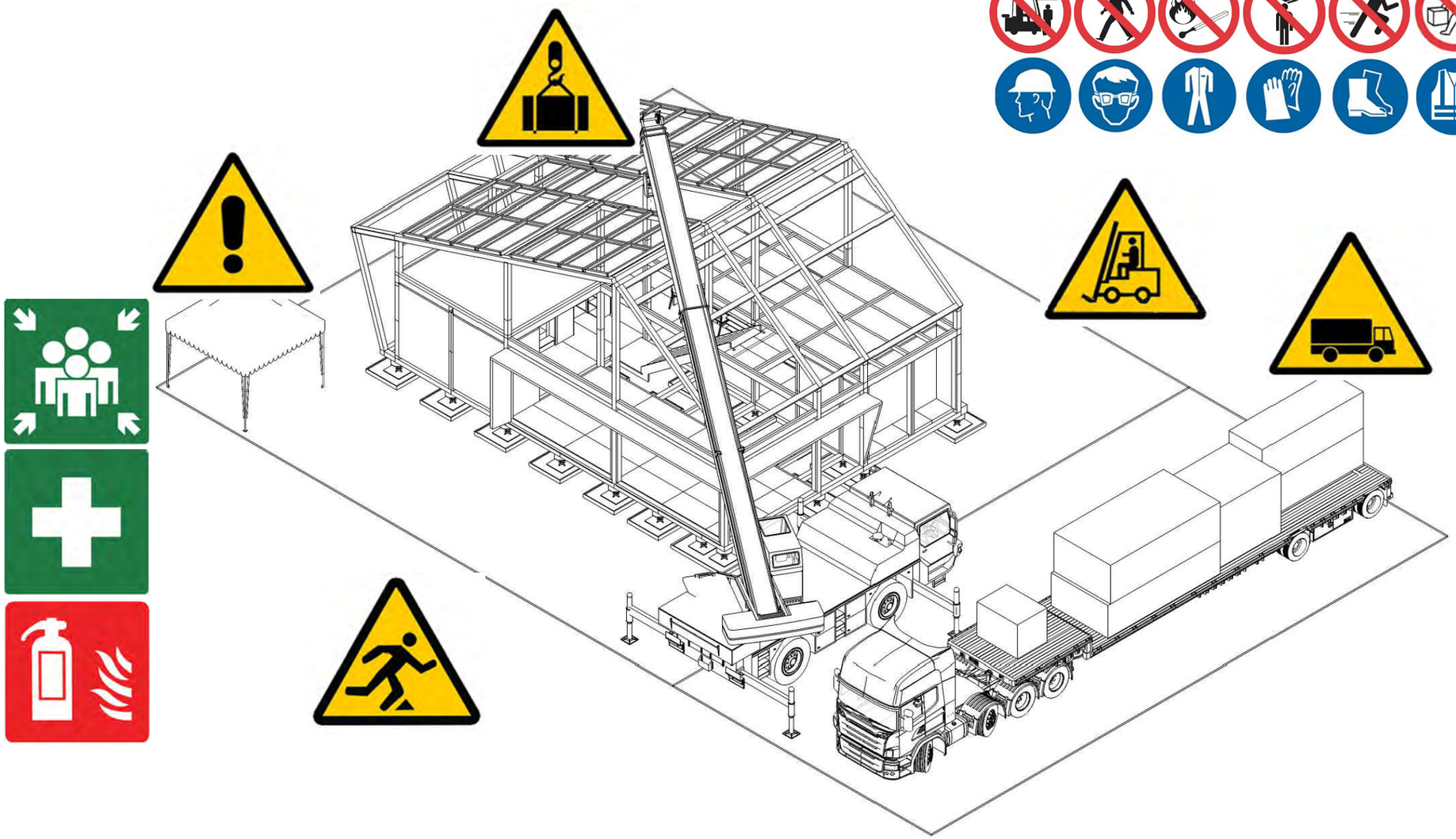

Main Structure & Roof Unit Phase

Step	1	2	3	4	5	6	7	8	9
Work Deatail	2F Main Structure	Rooof Unit							
Woker	6	4							
Note									

Solar Decathlon Europe

Project: ORCHID HOUSE

Institution: 國立交通大學 National Chiao Tung University

NCTU Architecture 國立交通大學建築研究所

Team Name: NCTU/UNICODE

Address: 1001 Ta-Hsueh Road Hsinchu City 30010 Taiwan

Contact: www.sde.tw

Consultants:

Note:

Mark	Date	Description
DN	2013/04/01	SD Submission
DN	2013/07/01	DDc Submission
ST	2013/11/01	DD Submission
ST	2014/03/03	CD Submission
ST	2014/04/30	CD Submission
ST	2014/06/02	CD Submission

Drawn by: MS

Checked by: DN

Scale: -

Unit: -

DWG. Title: ASSEMBLY PHASE 5

DWG. No.: HS-405

PAGE: 308

Where the worker are:

On the ground
On the Floor
On the mezzanine floor
On the roof

ALL SAFETY RULES MUST BE FOLLOWED

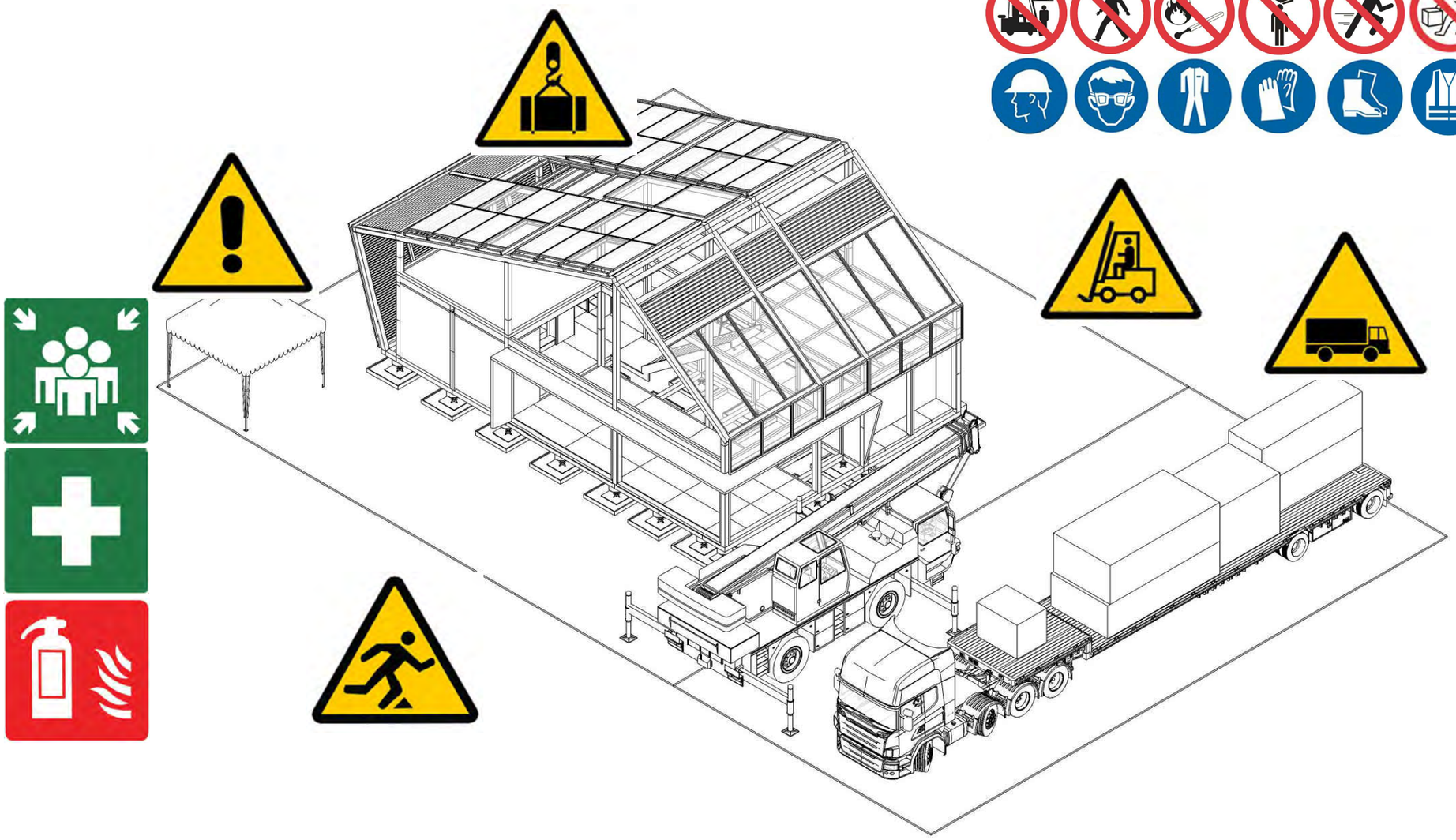

Solar Panel & Bayer Roof Panel & Louver Panel Phase

Step	1	2	3	4	5	6	7	8	9
Work Deatail	Solar Panel & Solar Panel Electricity System	Bayer Roof Panel	Louver Panel						
Woker	6	4	6						
Note									

Solar Decathlon Europe

Project: ORCHID HOUSE

Institution: 國立交通大學 National Chiao Tung University

NCTU Architecture 國立交通大學建築研究所

Team Name: NCTU/UNICODE
Address: 1001 Ta-Hsueh Road Hsinchu City 30010 Taiwan
Contact: www.sde.tw

Consultants:

Note:

Mark	Date	Description
DN	2013/04/01	SD Submission
DN	2013/07/01	DDc Submission
ST	2013/11/01	DD Submission
ST	2014/03/03	CD Submission
ST	2014/04/30	CD Submission
ST	2014/06/02	CD Submission

Drawn by: MS
Checked by: DN
Scale: -
Unit: -

DWG. Title: ASSEMBLY PHASE 6

DWG. No.: HS-406

PAGE: 309

Where the worker are:

On the ground
On the mezzanine floor
On the Floor

ALL SAFETY RULES MUST BE FOLLOWED

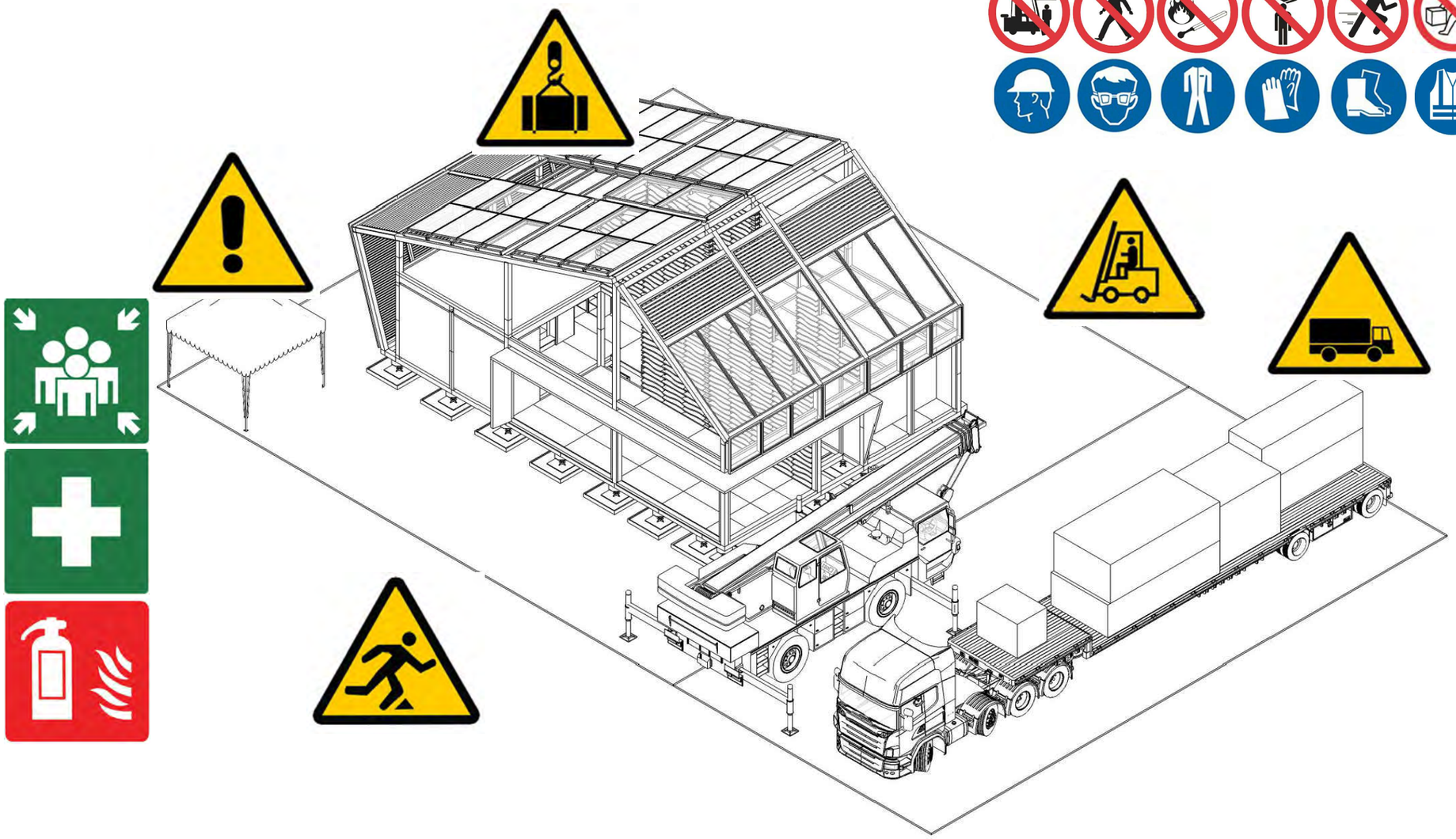

Green Core & M.E.P Wire & Water System Phase

Step	1	2	3	4	5	6	7	8	9
Work Deatail	Green Core Structure & Panel & Water System	M.E.P Wiring & Piping System							
Woker	6	4							
Note									

Solar Decathlon Europe

Project: ORCHID HOUSE

Institution: 國立交通大學 National Chiao Tung University

NCTU Architecture 國立交通大學建築研究所

Team Name: NCTU/UNICODE
Address: 1001 Ta-Hsueh Road Hsinchu City 30010 Taiwan
Contact: www.sde.tw

Consultants:

Note:

Mark	Date	Description
DN	2013/04/01	SD Submission
DN	2013/07/01	DDc Submission
ST	2013/11/01	DD Submission
ST	2014/03/03	CD Submission
ST	2014/04/30	CD Submission
ST	2014/06/02	CD Submission

Drawn by	MS
Checked by	DN
Scale	-
Unit	-

DWG. Title: ASSEMBLY PHASE 7

DWG. No.: HS-407

PAGE: 310

Where the worker are:

On the ground
On the Floor
On the mezzanine floor
On the roof

ALL SAFETY RULES MUST BE FOLLOWED

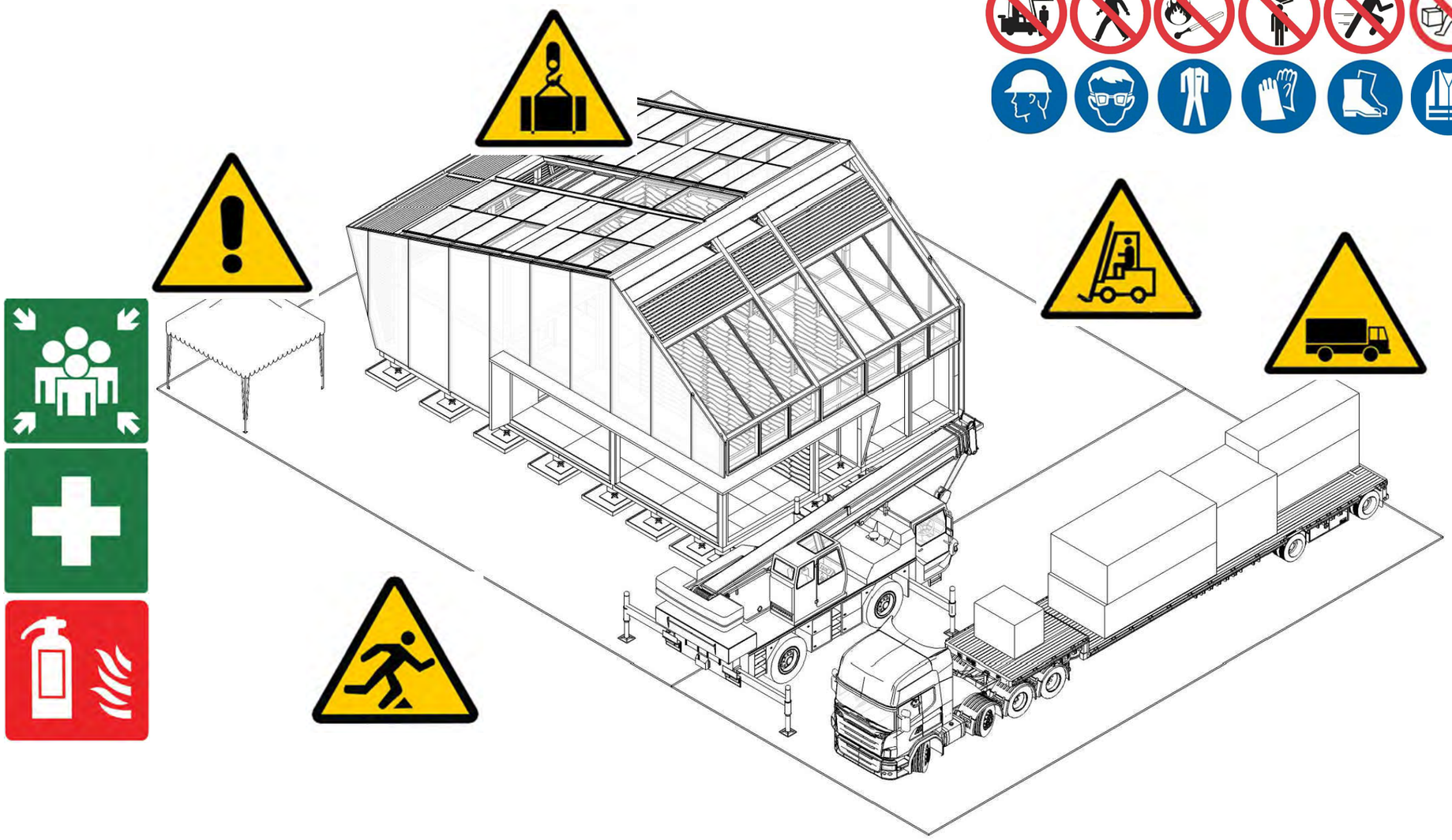

Bayer Wall System & Roof Cover System Phase

Step	1	2	3	4	5	6	7	8	9
Work Deatail	Bayer Wall System Structure & Panel	Roof Cover & Gutter System							
Woker	6	6							
Note									

Solar Decathlon Europe

Project: ORCHID HOUSE

Institution: 國立交通大學 National Chiao Tung University

NCTU Architecture 國立交通大學建築研究所

Team Name: NCTU/UNICODE
Address: 1001 Ta-Hsueh Road Hsinchu City 30010 Taiwan
Contact: www.sde.tw

Consultants:

Note:

Mark	Date	Description
DN	2013/04/01	SD Submission
DN	2013/07/01	DDc Submission
ST	2013/11/01	DD Submission
ST	2014/03/03	CD Submission
ST	2014/04/30	CD Submission
ST	2014/06/02	CD Submission

Drawn by: MS
Checked by: DN
Scale: -
Unit: -

DWG. Title: ASSEMBLY PHASE 8

DWG. No.: HS-408

PAGE: 311

Where the worker are:

On the ground
On the Floor
On the mezzanine floor
On the roof

ALL SAFETY RULES MUST BE FOLLOWED

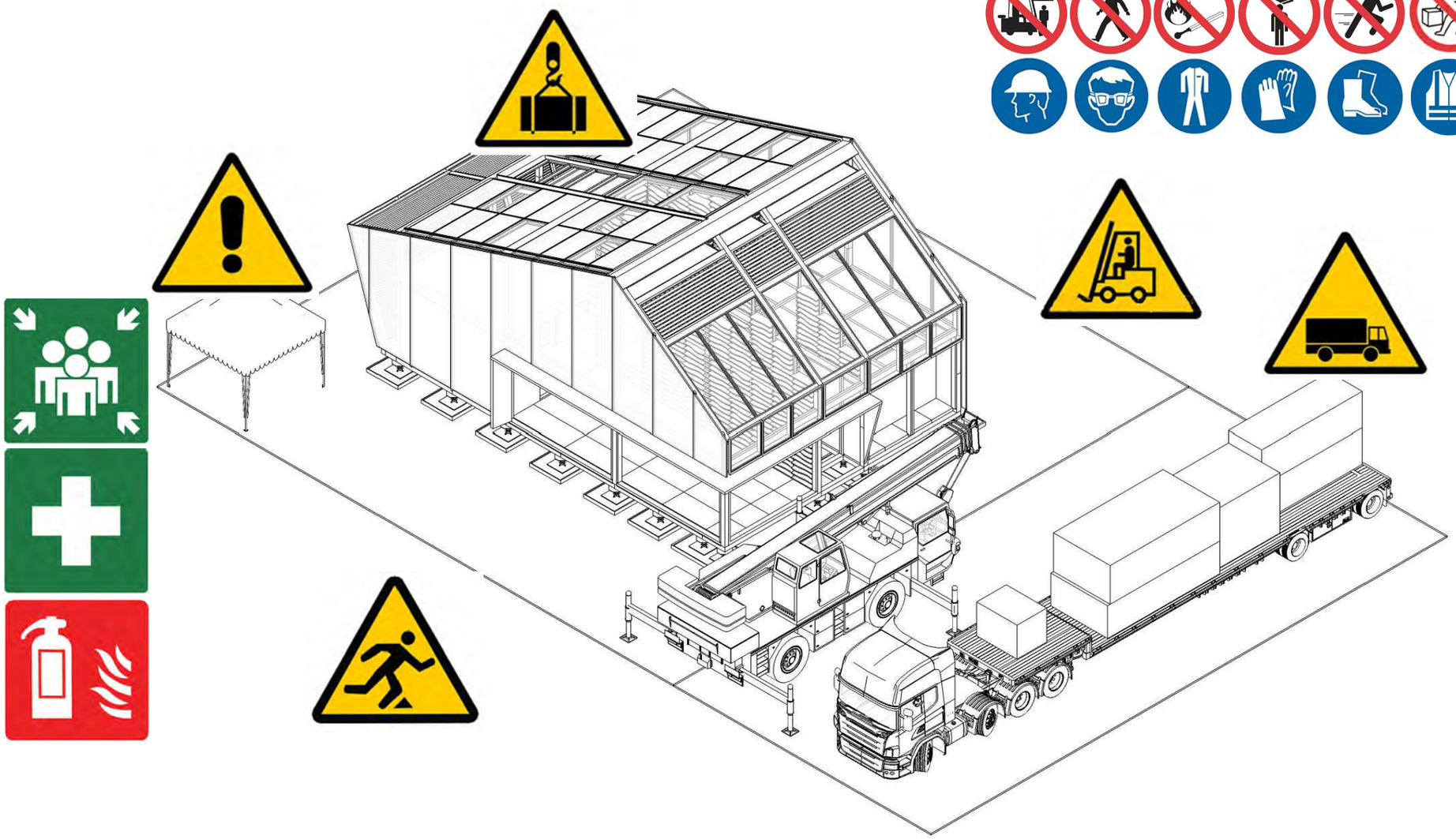

Roof Waterproof & Equipment & Lighting Test Phase

Step	1	2	3	4	5	6	7	8	9
Work Deatail	Roof Waterproof	Equipment & Lighting Test							
Woker	6	6							
Note									

Solar Decathlon Europe

Project: ORCHID HOUSE

Institution: 國立交通大學 National Chiao Tung University

NCTU Architecture 國立交通大學建築研究所

Team Name: NCTU/UNICODE
Address: 1001 Ta-Hsueh Road Hsinchu City 30010 Taiwan
Contact: www.sde.tw

Consultants:

Note:

Mark	Date	Description
DN	2013/04/01	SD Submission
DN	2013/07/01	DDc Submission
ST	2013/11/01	DD Submission
ST	2014/03/03	CD Submission
ST	2014/04/30	CD Submission
ST	2014/06/02	CD Submission

Drawn by: MS
Checked by: DN
Scale: -
Unit: -

DWG. Title: ASSEMBLY PHASE 9

DWG. No.: HS-409

PAGE: 312

Where the worker are:

On the ground
On the Floor
On the mezzanine floor

ALL SAFETY RULES MUST BE FOLLOWED

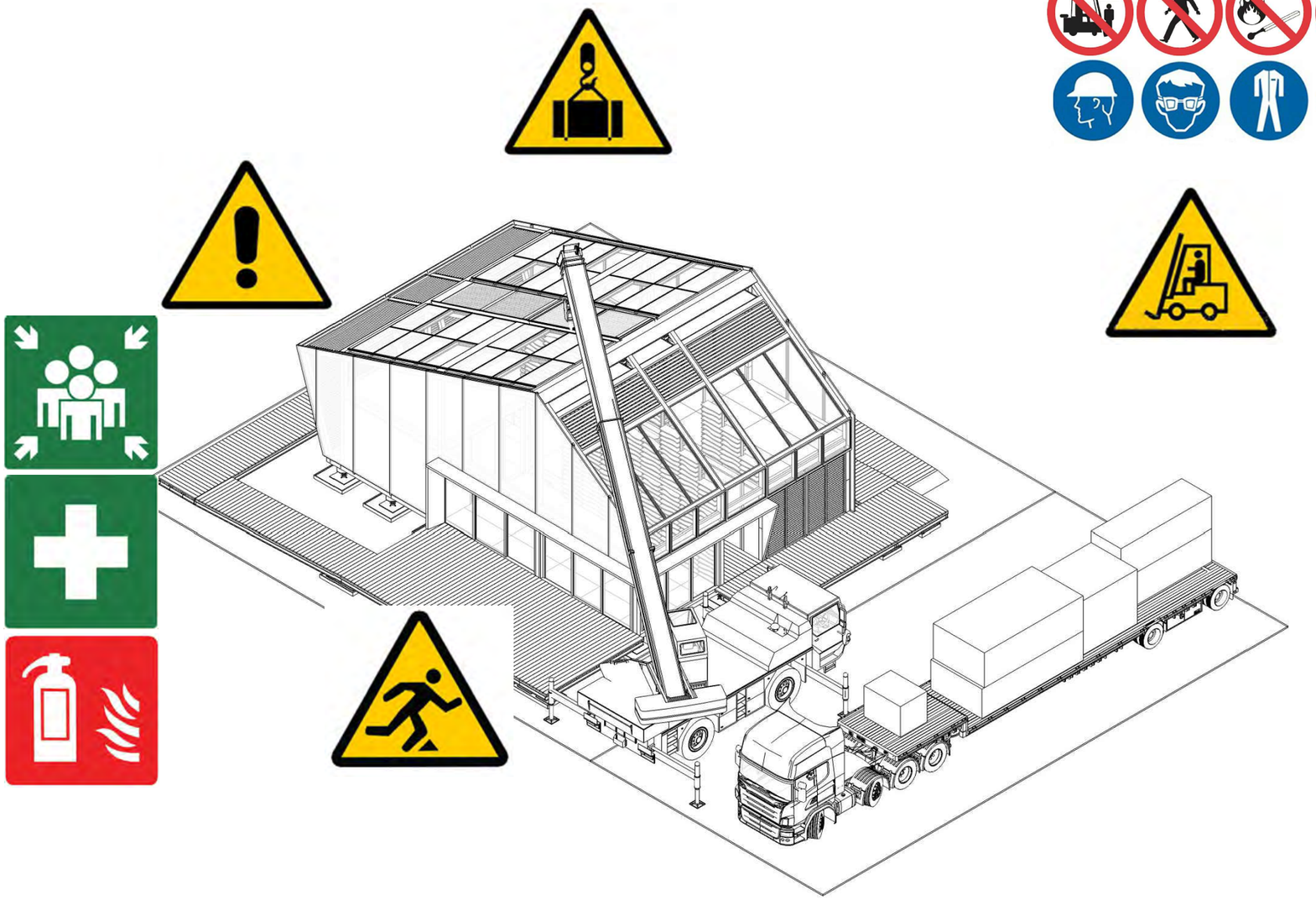

Outdoor Terrace & Planting & Furniture Phase

Step	1	2	3	4	5	6	7	8	9
Work Deatail	Outdoor Terrace Structure & Handrail & LIghting	Outdoor Planting & Green Core Planting	Furniture	Appliances	System Test	Lot Clean			
Woker	6	6	6	6	6	6			
Note									

Solar Decathlon Europe

Project: ORCHID HOUSE

Institution: 國立交通大學 National Chiao Tung University

NCTU Architecture 國立交通大學建築研究所

Team Name: NCTU/UNICODE
Address: 1001 Ta-Hsueh Road Hsinchu City 30010 Taiwan
Contact: www.sde.tw

Consultants:

Note:

Mark	Date	Description
DN	2013/04/01	SD Submission
DN	2013/07/01	DDc Submission
ST	2013/11/01	DD Submission
ST	2014/03/03	CD Submission
ST	2014/04/30	CD Submission
ST	2014/06/02	CD Submission

Drawn by: MS
Checked by: DN
Scale: -
Unit: -

DWG. Title: ASSEMBLY PHASE 10

DWG. No.: HS-410

PAGE: 313

Where the worker are:

On the ground — On the mezzanine floor

On the Floor — On the roof

ALL SAFETY RULES MUST BE FOLLOWED

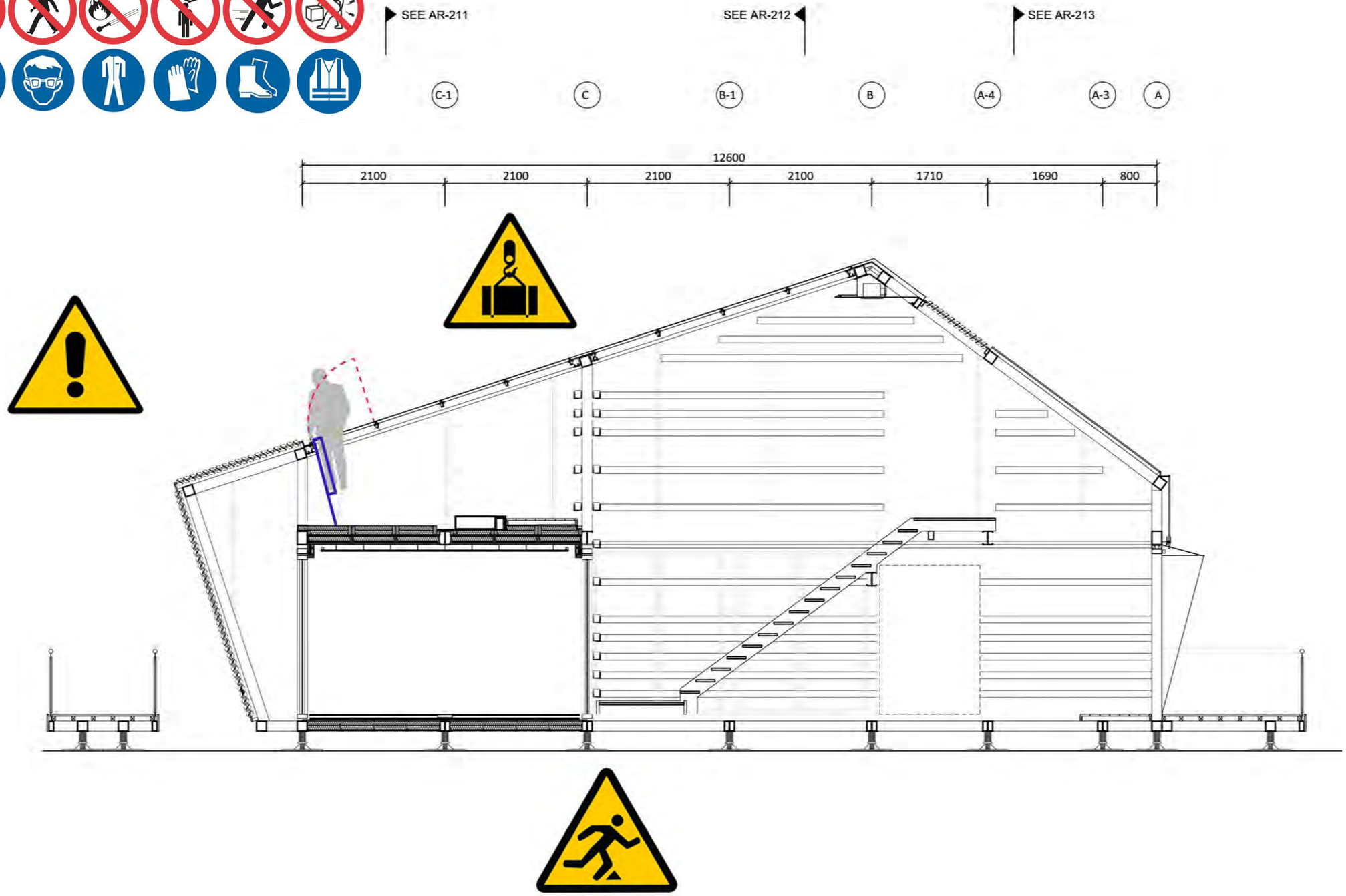

Solar Decathlon Europe

Project: ORCHID HOUSE

Institution: 國立交通大學 National Chiao Tung University

NCTU Architecture 國立交通大學建築研究所

Team Name: NCTU/UNICODE

Address: 1001 Ta-Hsueh Road, Hsinchu City 30010, Taiwan

Contact: www.sde.tw

Consultants:

Note:

Mark	Date	Description
DN	2013/04/01	SD Submission
DN	2013/07/01	DDc Submission
ST	2013/11/01	DD Submission
ST	2014/03/03	CD Submission
ST	2014/04/30	CD Submission
ST	2014/06/02	CD Submission

Drawn by	ST
Checked by	DN
Scale	1:60
Unit	mm

DWG. Title: HEALTH AND SAFETY DURING MAINTENANCE

DWG. No. HS-501

PAGE 314

Where the worker are:
On the ground On the mezzanine floor
On the Floor

ALL SAFETY RULES MUST BE FOLLOWED

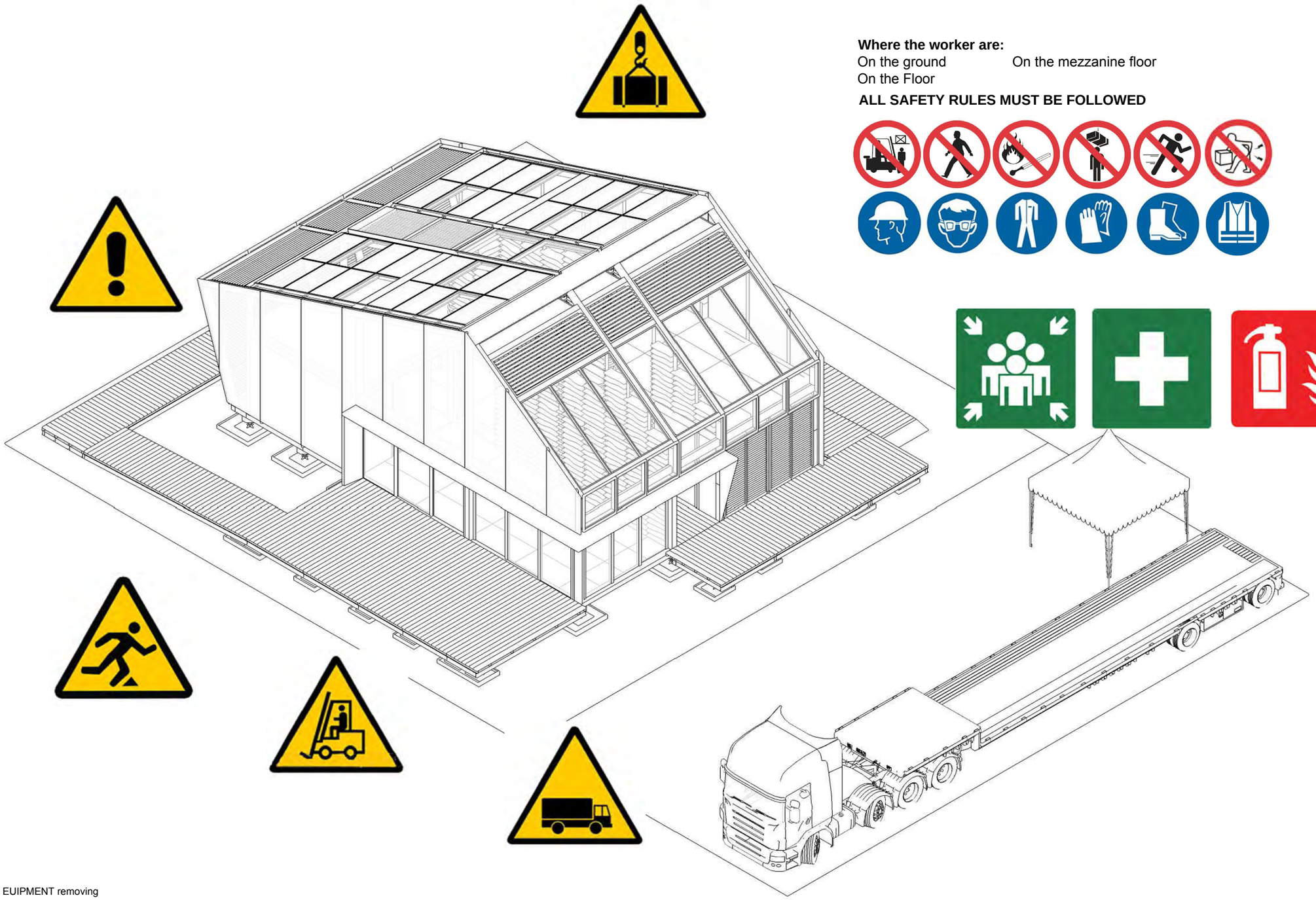

INTERIOR EUIPMENT removing

Step	1	2	3	4	5	6	7			
Work detail	Plants removing	accessory removing	Furniture removing	Kitchen/Appliance/Lamp equipment	Machinery room	Outside pipeline/Lamps	Outside handrail			
Worker	6	4	6	4	2	4	4			
Note										

Solar Decathlon Europe

Project: ORCHID HOUSE

Institution: 國立交通大學 National Chiao Tung University

NCTU Architecture 國立交通大學建築研究所

Team Name: NCTU/UNICODE

Address: 1001 Ta-Hsueh Road
Hsinchu City 30010
Taiwan

Contact: www.sde.tw

Consultants:

Note:

Mark	Date	Description
DN	2013/04/01	SD Submission
DN	2013/07/01	DDc Submission
ST	2013/11/01	DD Submission
ST	2014/03/03	CD Submission
ST	2014/04/30	CD Submission
ST	2014/06/02	CD Submission

Drawn by SC

Checked by -

Scale -

Unit -

DWG. Title

Disassembly Phase 1

DWG. No. HS-601

PAGE 315

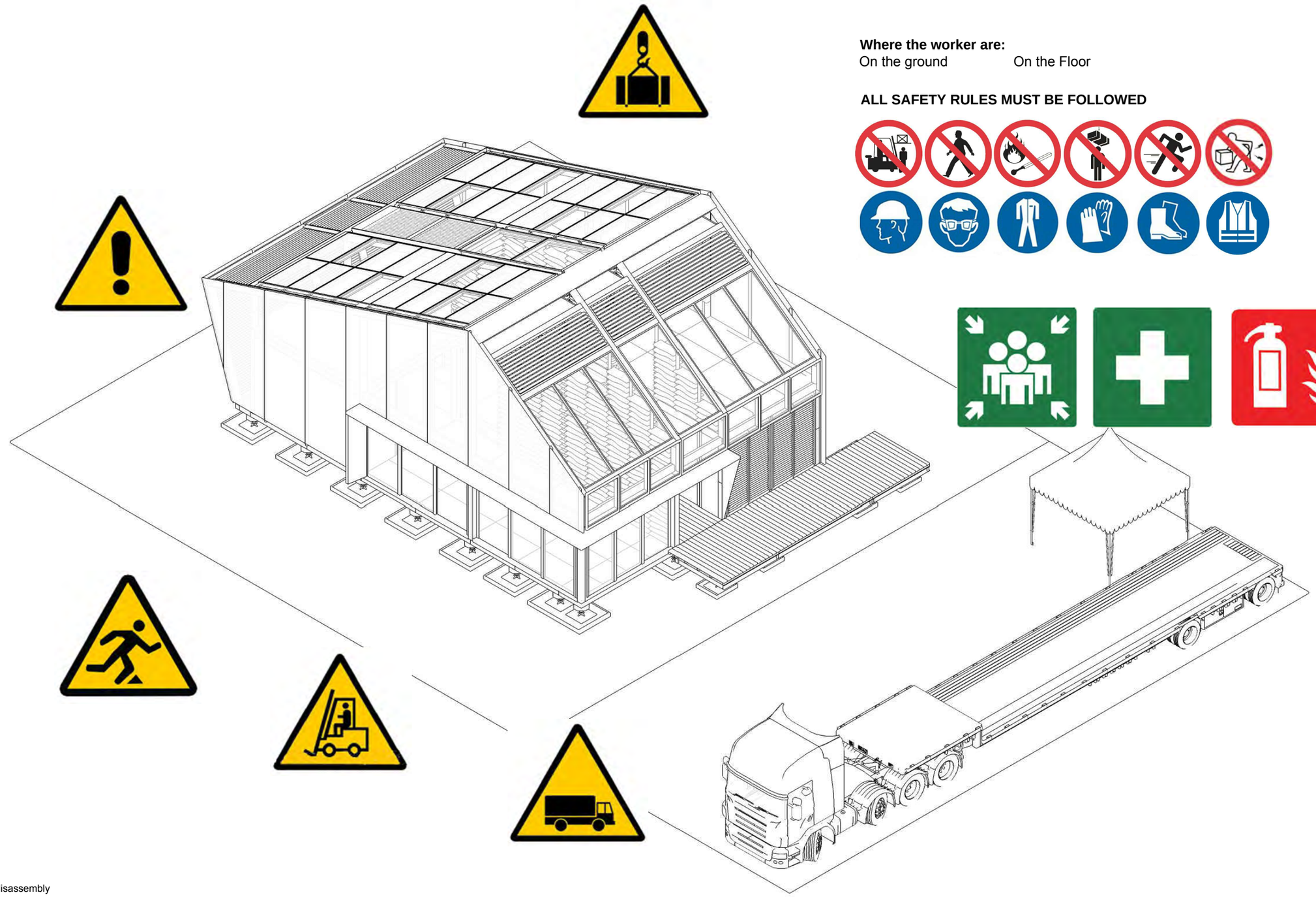

Where the worker are:
On the ground On the Floor

ALL SAFETY RULES MUST BE FOLLOWED

Outside disassembly

Step	1	2	3	4						
Work detail	Outside WPC/deck	Outside footing	East/West Bayer board	South Eletric Blinds						
Worker	6	2	5	3						
Note										

Solar Decathlon Europe

Project: ORCHID HOUSE

Institution: 國立交通大學 National Chiao Tung University

NCTU Architecture 國立交通大學建築研究所

Team Name: NCTU/UNICODE

Address: 1001 Ta-Hsueh Road
Hsinchu City 30010
Taiwan

Contact: www.sde.tw

Consultants:

Note:

N

Mark	Date	Description
DN	2013/04/01	SD Submission
DN	2013/07/01	DDc Submission
ST	2013/11/01	DD Submission
ST	2014/03/03	CD Submission
ST	2014/04/30	CD Submission
ST	2014/06/02	CD Submission

Drawn by	SC
Checked by	-
Scale	-
Unit	-

DWG. Title: Disassembly Phase 2

DWG. No.: HS-602

PAGE: 316

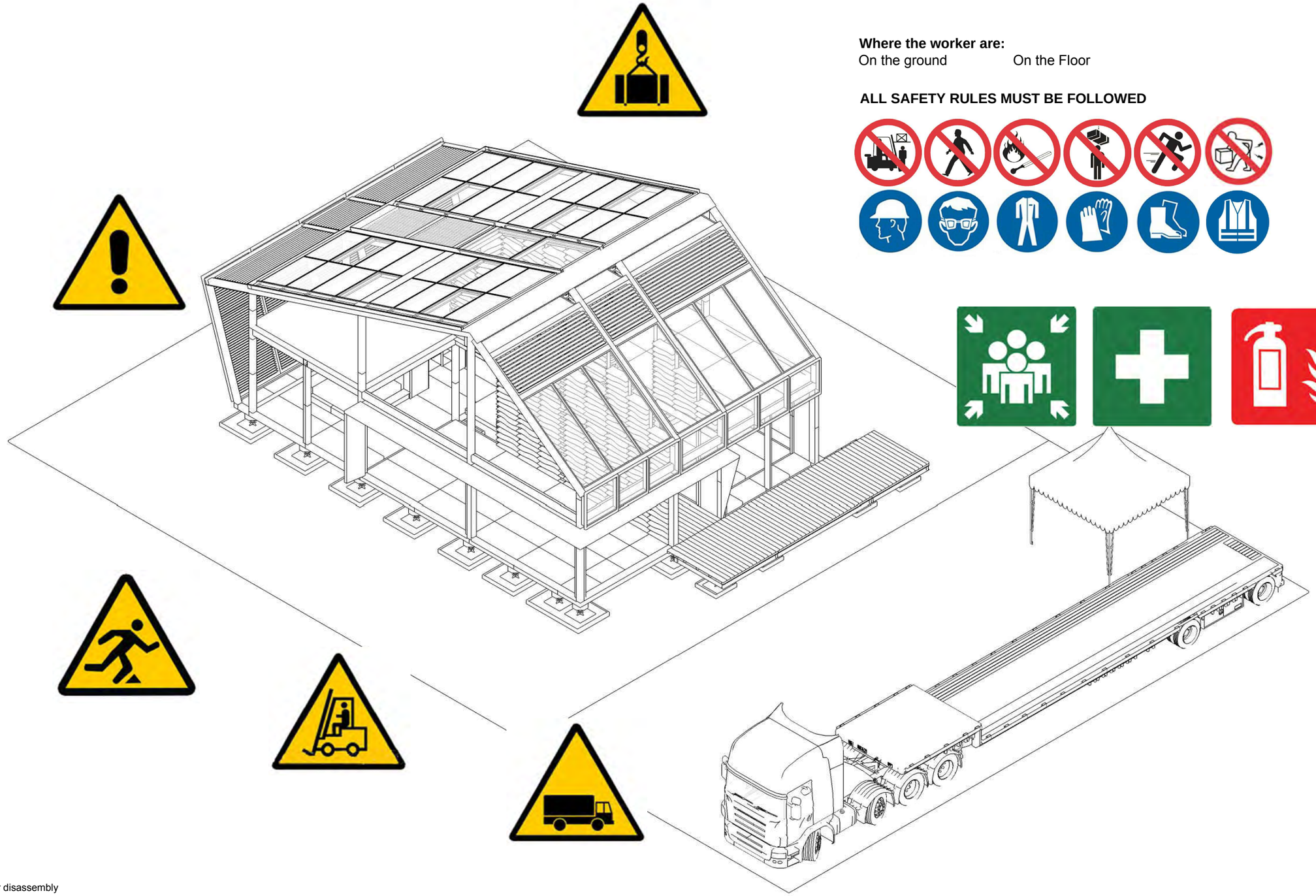

Where the worker are:
On the ground On the Floor

ALL SAFETY RULES MUST BE FOLLOWED

First Floor disassembly

Step	1	2	3	4	5	6	7	8	9
Work detail	1F Interior floor	Aluminium window	Sensor removing	1F Ceiling	1F Wooden wall	Bathroom	Kitchen Island	Work Station removing	Thermal wall removing
Worker	4	2	2	4	6	4	3	4	4
Note									

Solar Decathlon Europe

Project: ORCHID HOUSE

Institution: 國立交通大學 National Chiao Tung University

NCTU Architecture 國立交通大學建築研究所

Team Name: NCTU/UNICODE

Address: 1001 Ta-Hsueh Road
Hsinchu City 30010
Taiwan

Contact: www.sde.tw

Consultants:

Note:

Mark	Date	Description
DN	2013/04/01	SD Submission
DN	2013/07/01	DDc Submission
ST	2013/11/01	DD Submission
ST	2014/03/03	CD Submission
ST	2014/04/30	CD Submission
ST	2014/06/02	CD Submission

Drawn by SC

Checked by -

Scale -

Unit -

DWG. Title

Disassembly Phase 3

DWG. No. HS-603

PAGE 317

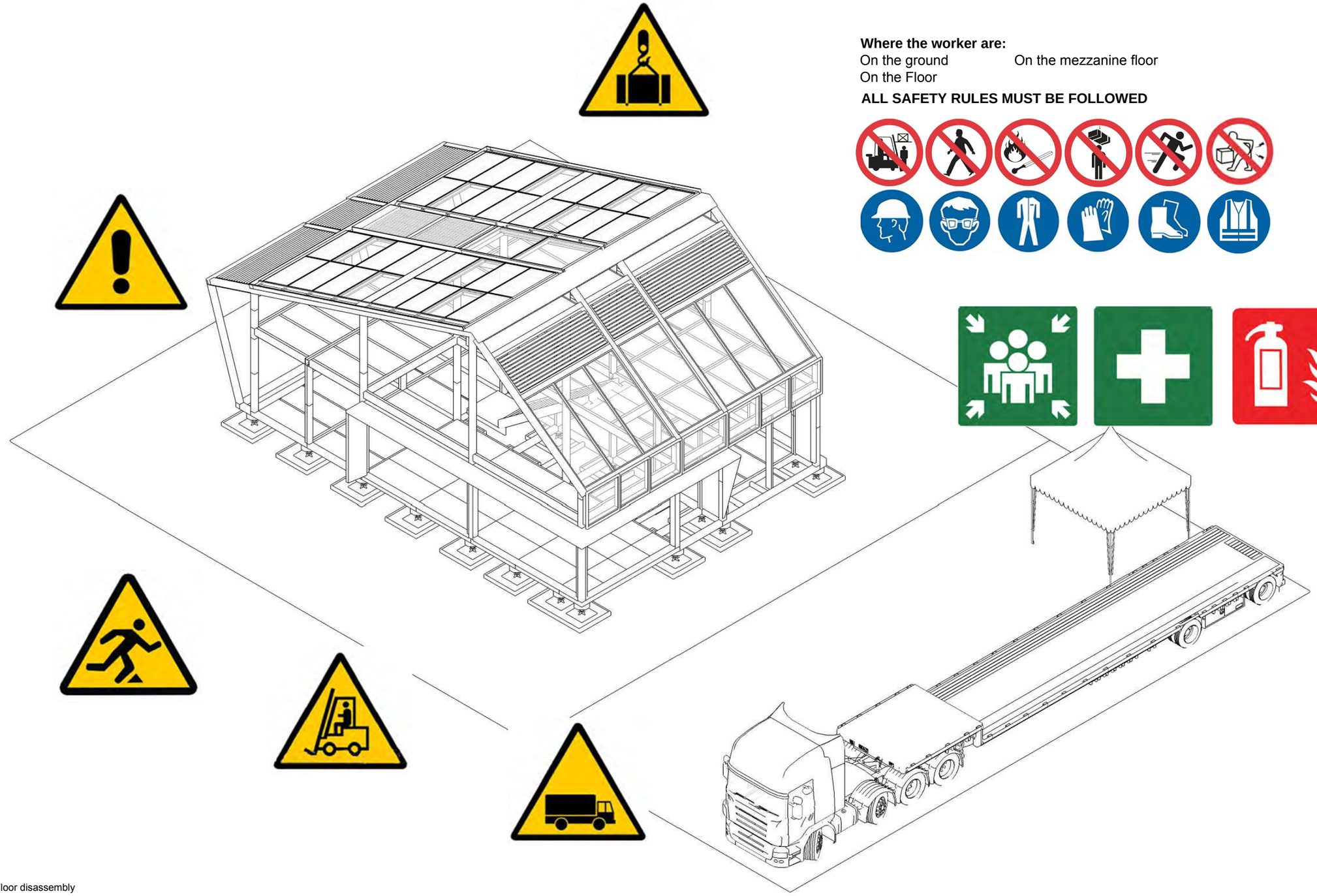

Where the worker are:
On the ground
On the mezzanine floor
On the Floor

ALL SAFETY RULES MUST BE FOLLOWED

Second Floor disassembly

Step	1	2	3	4	5	6	7	8	9	
Work detail	2F WPC	2F Equipment/Appliance	Water wall removing	2F pipline	Green core	1F Upper wooden box	2F Upper wooden box	Window/Door disassembly	Tea terrance/Entrance WPC	
Worker	3	5	8	4	4	6	6	4	8	
Note										

Solar Decathlon Europe

Project: ORCHID HOUSE

Institution: 國立交通大學 National Chiao Tung University

NCTU Architecture 國立交通大學建築研究所

Team Name: NCTU/UNICODE
Address: 1001 Ta-Hsueh Road Hsinchu City 30010 Taiwan
Contact: www.sde.tw

Consultants:

Note:

N

Mark	Date	Description
DN	2013/04/01	SD Submission
DN	2013/07/01	DDc Submission
ST	2013/11/01	DD Submission
ST	2014/03/03	CD Submission
ST	2014/04/30	CD Submission
ST	2014/06/02	CD Submission

Drawn by	SC
Checked by	-
Scale	-
Unit	-

DWG. Title: Disassembly Phase 4

DWG. No. HS-604

PAGE 318

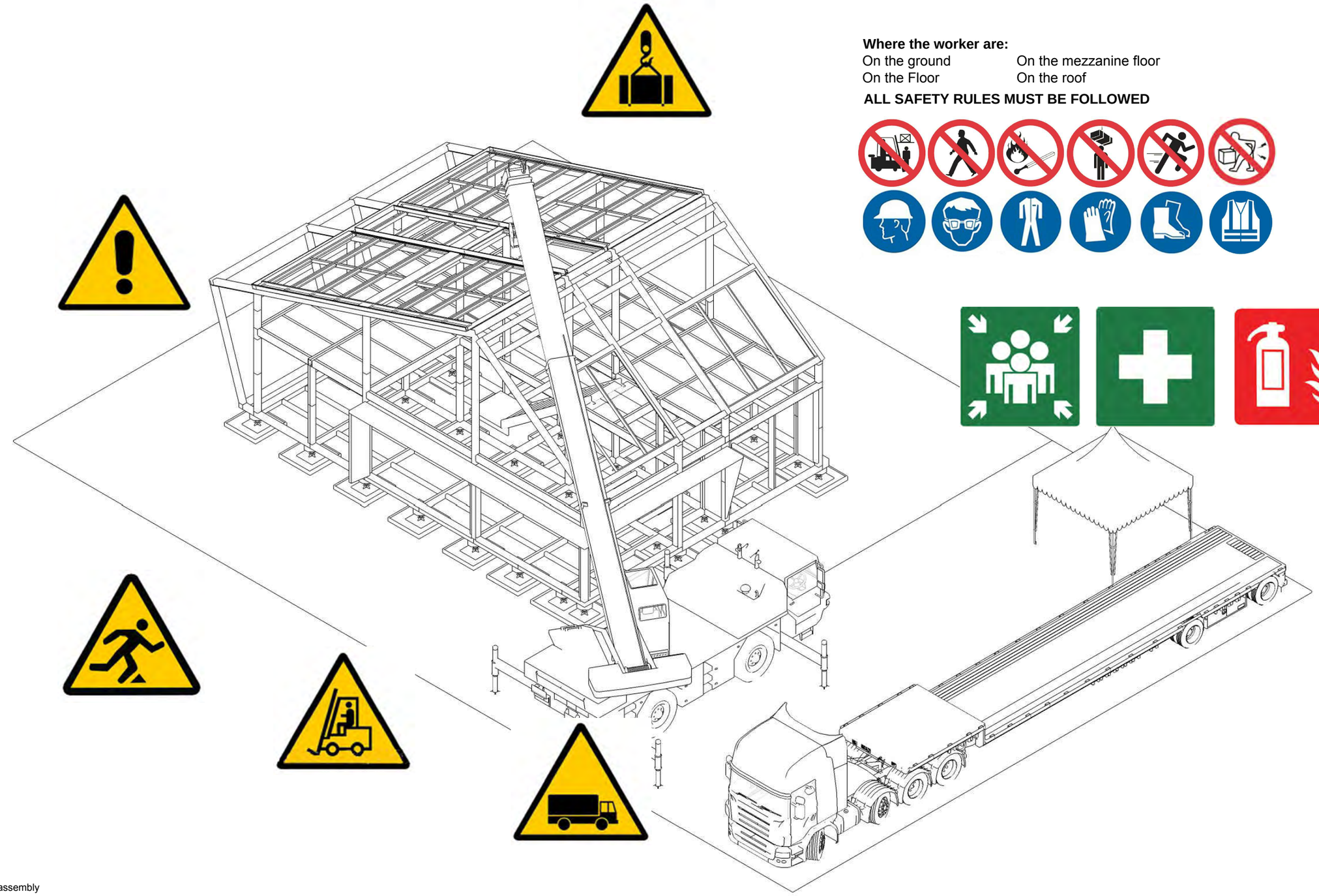

Where the worker are:

On the ground
On the mezzanine floor
On the Floor
On the roof

ALL SAFETY RULES MUST BE FOLLOWED

Roof disassembly

Step	1	2	3	4	5	6	7	8		
Work detail	Roof cover board	North Bayer board	Roof ridge Fans	Smart skin	Solar panel	North Eletric Blinds	Solar water heater	Water tank		
Worker	4	3	4	3	3	4	2	6		
Note										

Solar Decathlon Europe

Project: ORCHID HOUSE

Institution: 國立交通大學 National Chiao Tung University

NCTU Architecture 國立交通大學建築研究所

Team Name: NCTU/UNICODE

Address: 1001 Ta-Hsueh Road
Hsinchu City 30010
Taiwan

Contact: www.sde.tw

Consultants:

Note:

N

Mark	Date	Description
DN	2013/04/01	SD Submission
DN	2013/07/01	DDc Submission
ST	2013/11/01	DD Submission
ST	2014/03/03	CD Submission
ST	2014/04/30	CD Submission
ST	2014/06/02	CD Submission

Drawn by: SC

Checked by: -

Scale: -

Unit: -

DWG. Title: Disassembly Phase 5

DWG. No.: HS-605

PAGE: 319

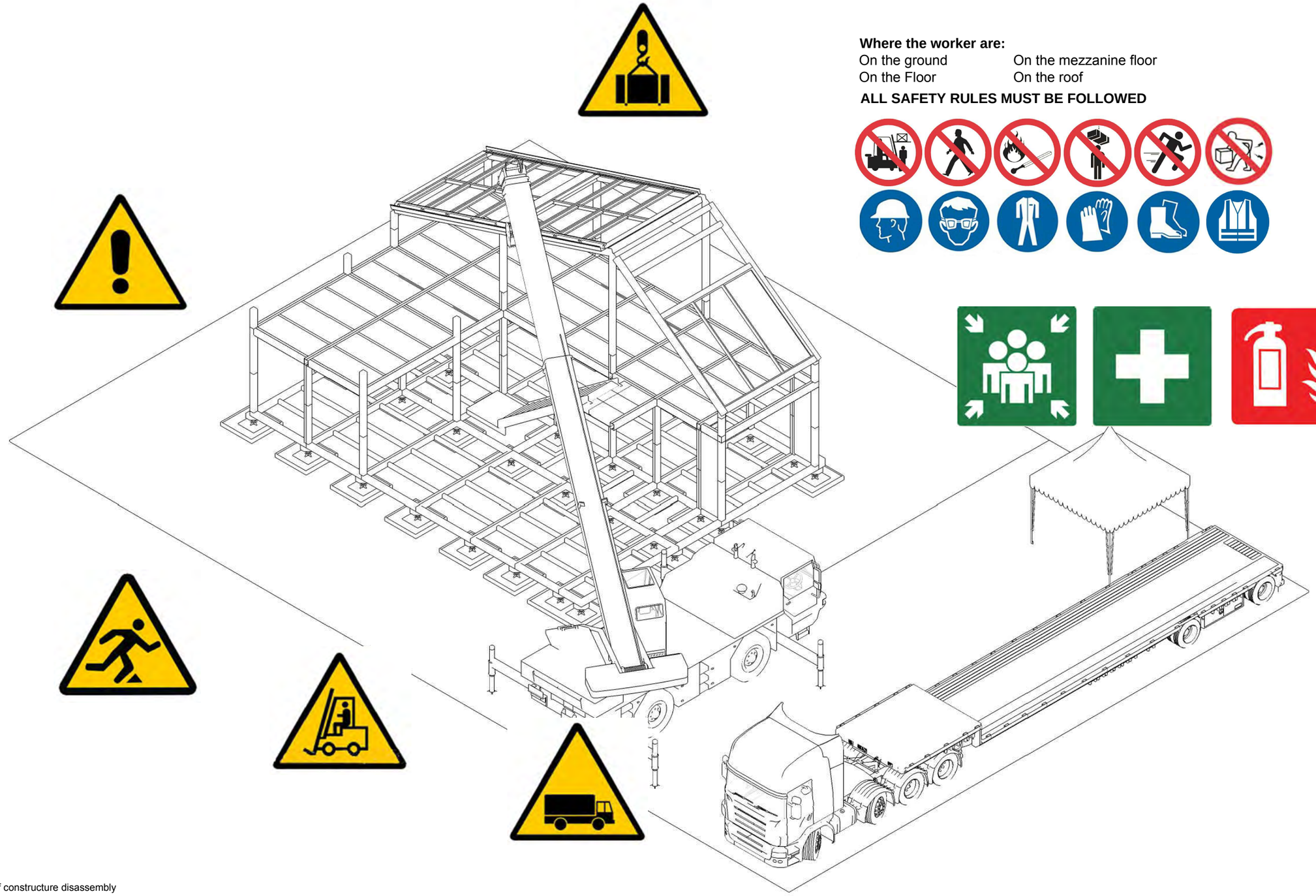

Where the worker are:

On the ground
On the Floor
On the mezzanine floor
On the roof

ALL SAFETY RULES MUST BE FOLLOWED

East Roof constructure disassembly

Step	1	2	3	4						
Work detail	E1,E2,E3,E4 unit disassembly	Roof Unit 5~7 disassembly	Roof Unit 9~11 disassembly	East column						
Worker	5	3	4	3						
Note										

Solar Decathlon Europe

Project: ORCHID HOUSE

Institution: 國立交通大學 National Chiao Tung University

NCTU Architecture 國立交通大學建築研究所

Team Name: NCTU/UNICODE

Address: 1001 Ta-Hsueh Road
Hsinchu City 30010
Taiwan

Contact: www.sde.tw

Consultants:

Note:

N

Mark	Date	Description
DN	2013/04/01	SD Submission
DN	2013/07/01	DDc Submission
ST	2013/11/01	DD Submission
ST	2014/03/03	CD Submission
ST	2014/04/30	CD Submission
ST	2014/06/02	CD Submission

Drawn by: SC

Checked by: -

Scale: -

Unit: -

DWG. Title: Disassembly Phase 6

DWG. No.: HS-606

PAGE: 320

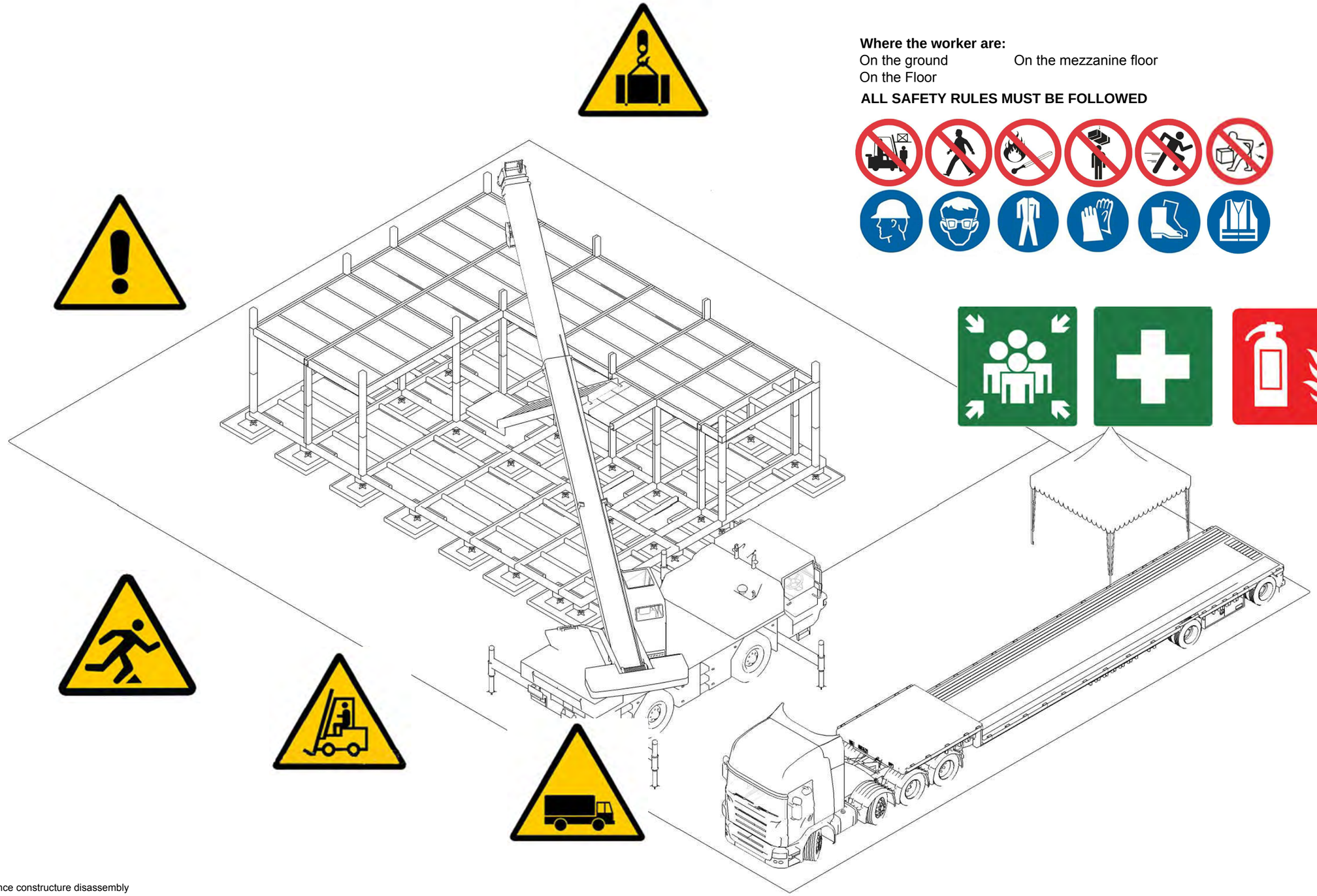

Where the worker are:
On the ground On the mezzanine floor
On the Floor

ALL SAFETY RULES MUST BE FOLLOWED

Tea terrance constructure disassembly

Step	1	2	3	4	5					
Work detail	Roof Unit 1~3 removing	2F unit disassemby	Roof Unit 9~11 disassembly	West column	East/North canopy					
Worker	4	6	4	3	6					
Note										

Solar Decathlon Europe

Project: ORCHID HOUSE

Institution: 國立交通大學 National Chiao Tung University

NCTU Architecture 國立交通大學建築研究所

Team Name: NCTU/UNICODE
Address: 1001 Ta-Hsueh Road Hsinchu City 30010 Taiwan
Contact: www.sde.tw

Consultants:

Note:

N

Mark	Date	Description
DN	2013/04/01	SD Submission
DN	2013/07/01	DDc Submission
ST	2013/11/01	DD Submission
ST	2014/03/03	CD Submission
ST	2014/04/30	CD Submission
ST	2014/06/02	CD Submission

Drawn by SC
Checked by -
Scale -
Unit -

DWG. Title: Disassembly Phase 7

DWG. No. HS-607

PAGE 321

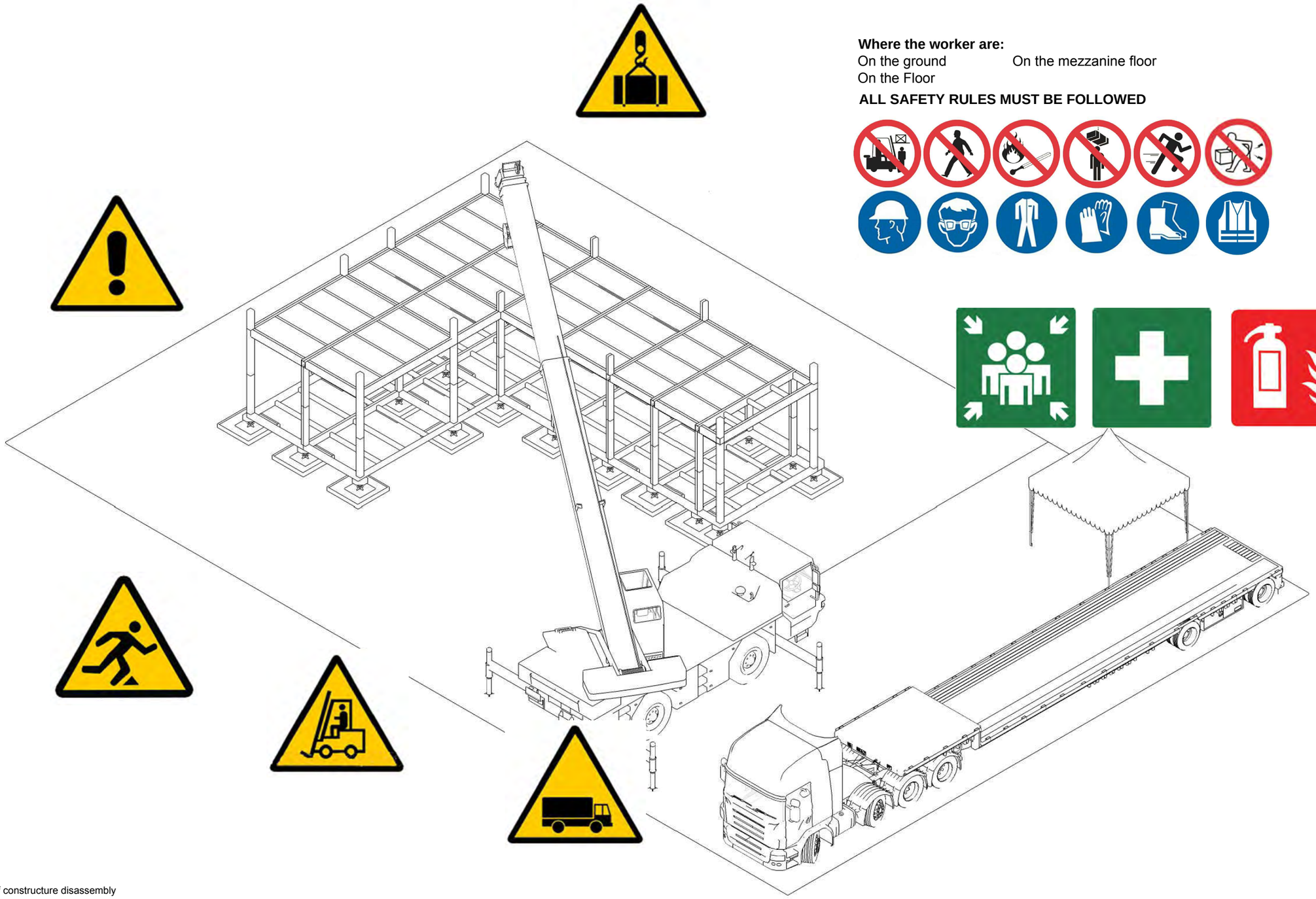

Where the worker are:

On the ground On the mezzanine floor

On the Floor

ALL SAFETY RULES MUST BE FOLLOWED

West Roof constructure disassembly

Step	1	2								
Work detail	Unit 6~10 disassembly	Tea terrance footing								
Worker	4	4								
Note										

Solar Decathlon Europe

Project: ORCHID HOUSE

Institution: 國立交通大學 National Chiao Tung University

NCTU Architecture 國立交通大學建築研究所

Team Name: NCTU/UNICODE

Address: 1001 Ta-Hsueh Road Hsinchu City 30010 Taiwan

Contact: www.sde.tw

Consultants:

Note:

N

Mark	Date	Description
DN	2013/04/01	SD Submission
DN	2013/07/01	DDc Submission
ST	2013/11/01	DD Submission
ST	2014/03/03	CD Submission
ST	2014/04/30	CD Submission
ST	2014/06/02	CD Submission

Drawn by SC

Checked by -

Scale -

Unit -

DWG. Title

Disassembly Phase 8

DWG. No. HS-608

PAGE 322

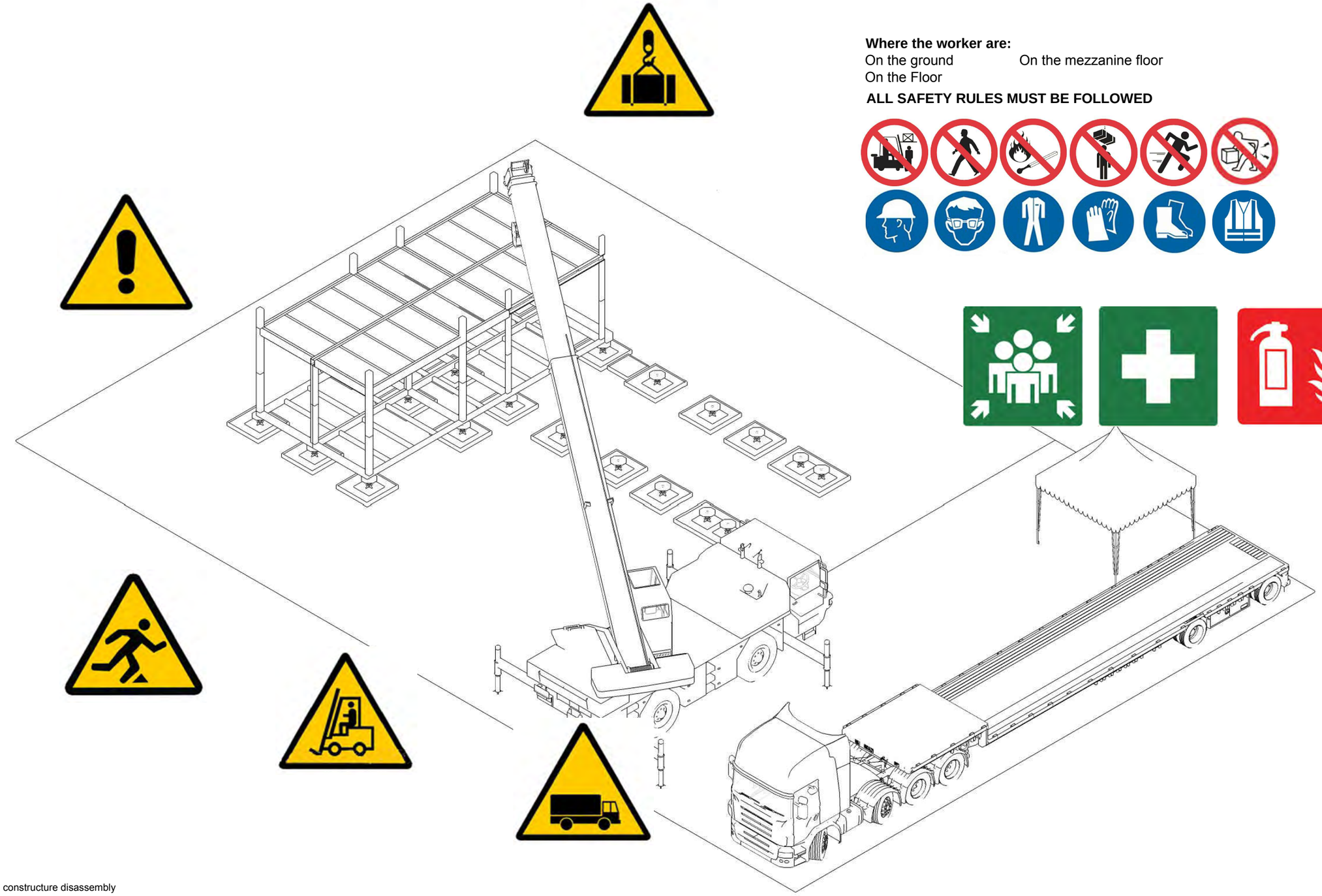

Where the worker are:

On the ground On the mezzanine floor

On the Floor

ALL SAFETY RULES MUST BE FOLLOWED

Unit 1~5 constructure disassembly

Step	1	2								
Work detail	Unit 1~5 disassembly	Unit 1~5 removing								
Worker	6	4								
Note										

Solar Decathlon Europe

Project: ORCHID HOUSE

Institution: 國立交通大學 National Chiao Tung University

NCTU Architecture 國立交通大學建築研究所

Team Name: NCTU/UNICODE

Address: 1001 Ta-Hsueh Road Hsinchu City 30010 Taiwan

Contact: www.sde.tw

Consultants:

Note:

Mark	Date	Description
DN	2013/04/01	SD Submission
DN	2013/07/01	DDc Submission
ST	2013/11/01	DD Submission
ST	2014/03/03	CD Submission
ST	2014/04/30	CD Submission
ST	2014/06/02	CD Submission

Drawn by SC

Checked by -

Scale -

Unit -

DWG. Title

Disassembly Phase 9

DWG. No. HS-609

PAGE 323

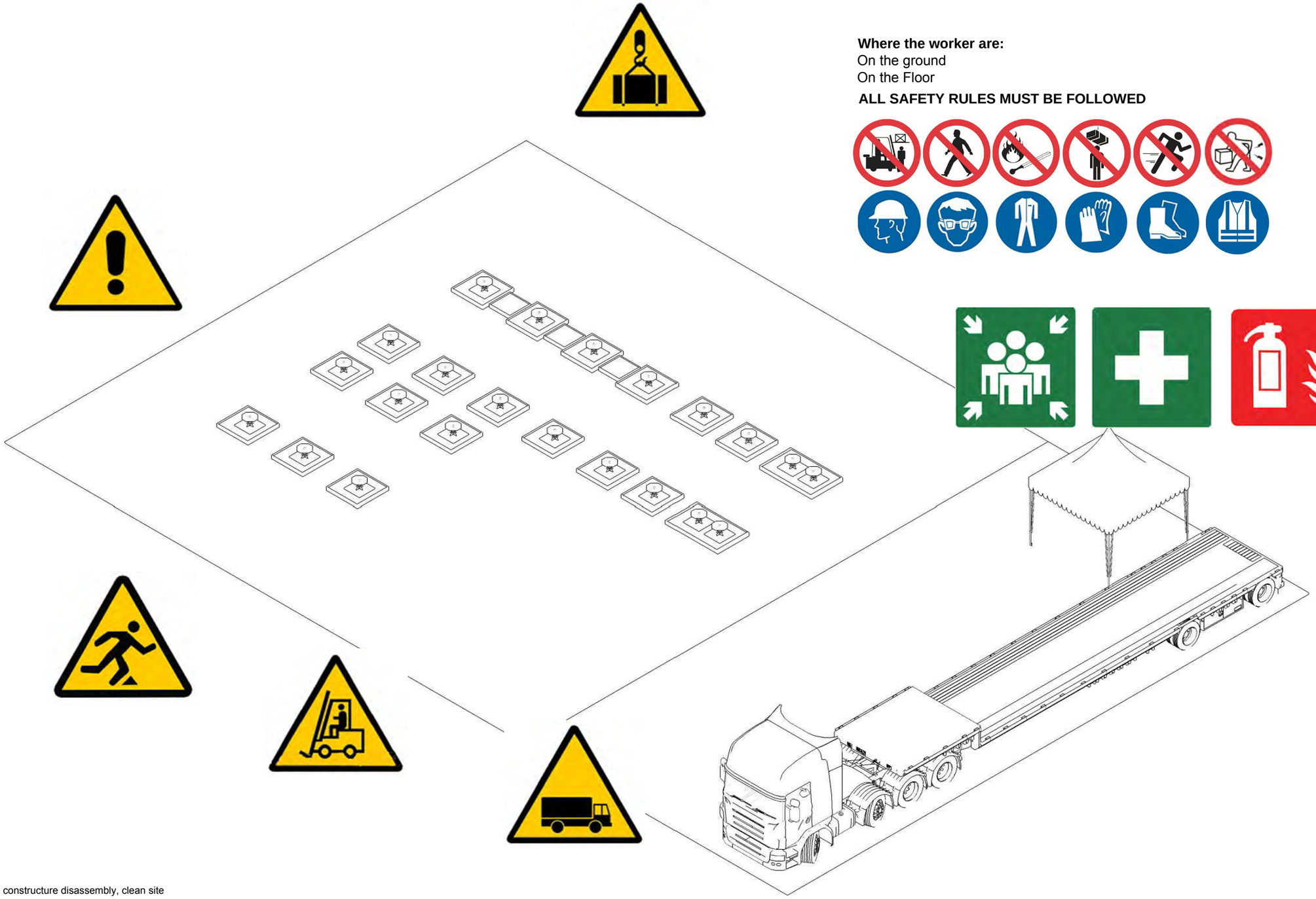

Where the worker are:
On the ground
On the Floor

ALL SAFETY RULES MUST BE FOLLOWED

Unit 11~12 constructure disassembly, clean site

Step	1	2	3	4						
Work detail	Unit 11~12 disassembly	Unit 11~12 removing	Footing removing	Site cleaning						
Worker	6	4	6	10						
Note										

Solar Decathlon Europe

Project: ORCHID HOUSE

Institution: 國立交通大學 National Chiao Tung University

NCTU Architecture 國立交通大學建築研究所

Team Name: NCTU/UNICODE
Address: 1001 Ta-Hsueh Road Hsinchu City 30010 Taiwan
Contact: www.sde.tw

Consultants:

Note:

Mark	Date	Description
DN	2013/04/01	SD Submission
DN	2013/07/01	DDc Submission
ST	2013/11/01	DD Submission
ST	2014/03/03	CD Submission
ST	2014/04/30	CD Submission
ST	2014/06/02	CD Submission

Drawn by: SC
Checked by: -
Scale: -
Unit: -

DWG. Title: Disassembly Phase 10

DWG. No.: HS-610

PAGE: 324

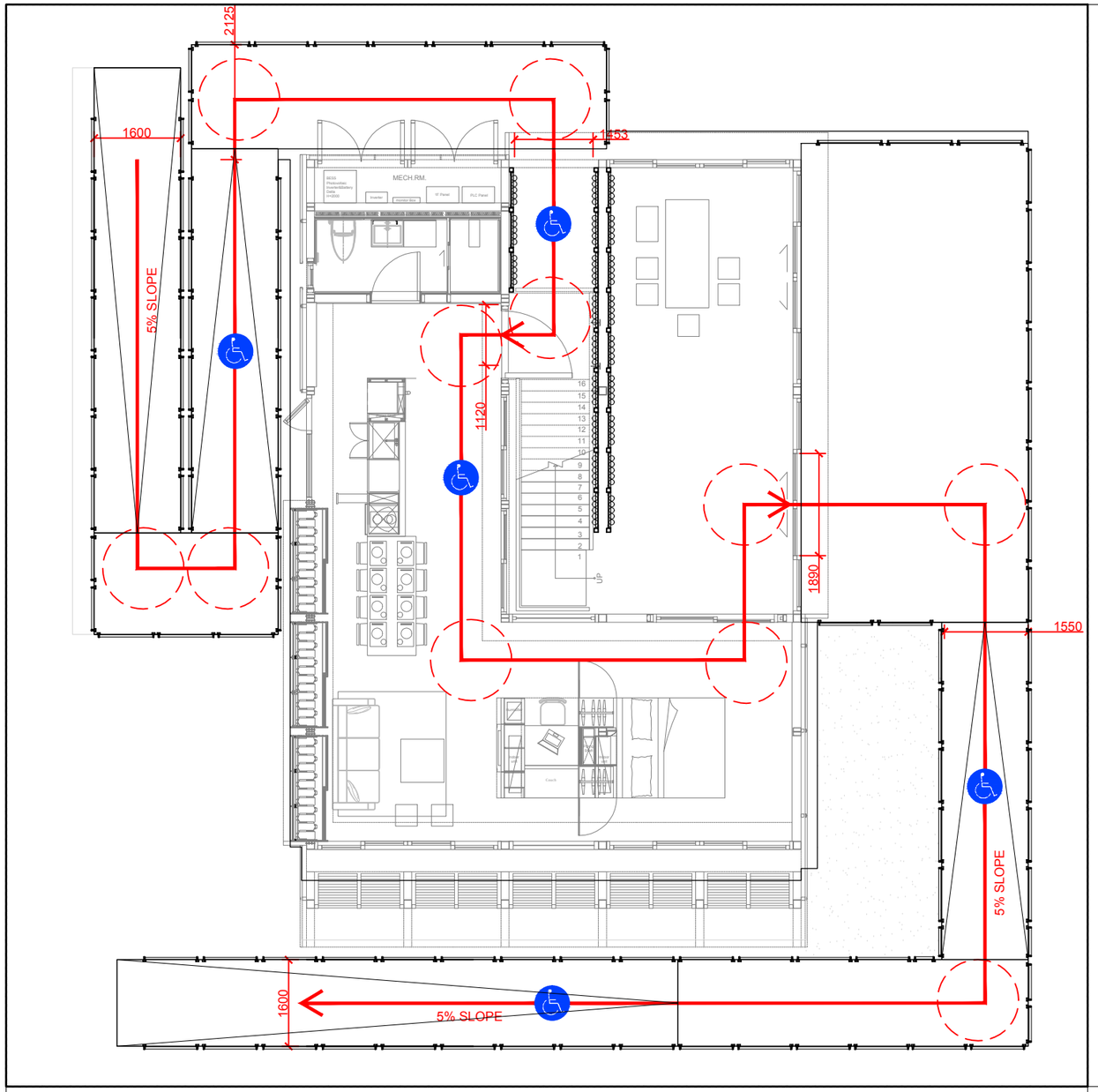

0 1 2 5 METER

Solar Decathlon Europe

Project:

ORCHID HOUSE

Institution:

國立交通大學 National Chiao Tung University

NCTU Architecture 國立交通大學建築研究所

Team Name: NCTU/UNICODE

Address: 1001 Ta-Hsueh Road Hsinchu City 30010 Taiwan

Contact: www.sde.tw

Consultants:

Note:

Mark	Date	Description
DN	2013/04/01	SD Submission
DN	2013/07/01	DDc Submission
ST	2013/11/01	DD Submission
ST	2014/03/03	CD Submission
ST	2014/04/30	CD Submission
ST	2014/06/02	CD Submission

Drawn by	DN
Checked by	DN
Scale	1:100
Unit	mm

DWG. Title

SITE ACCESSIBILITY PLAN

DWG. No. PT-001

PAGE 325

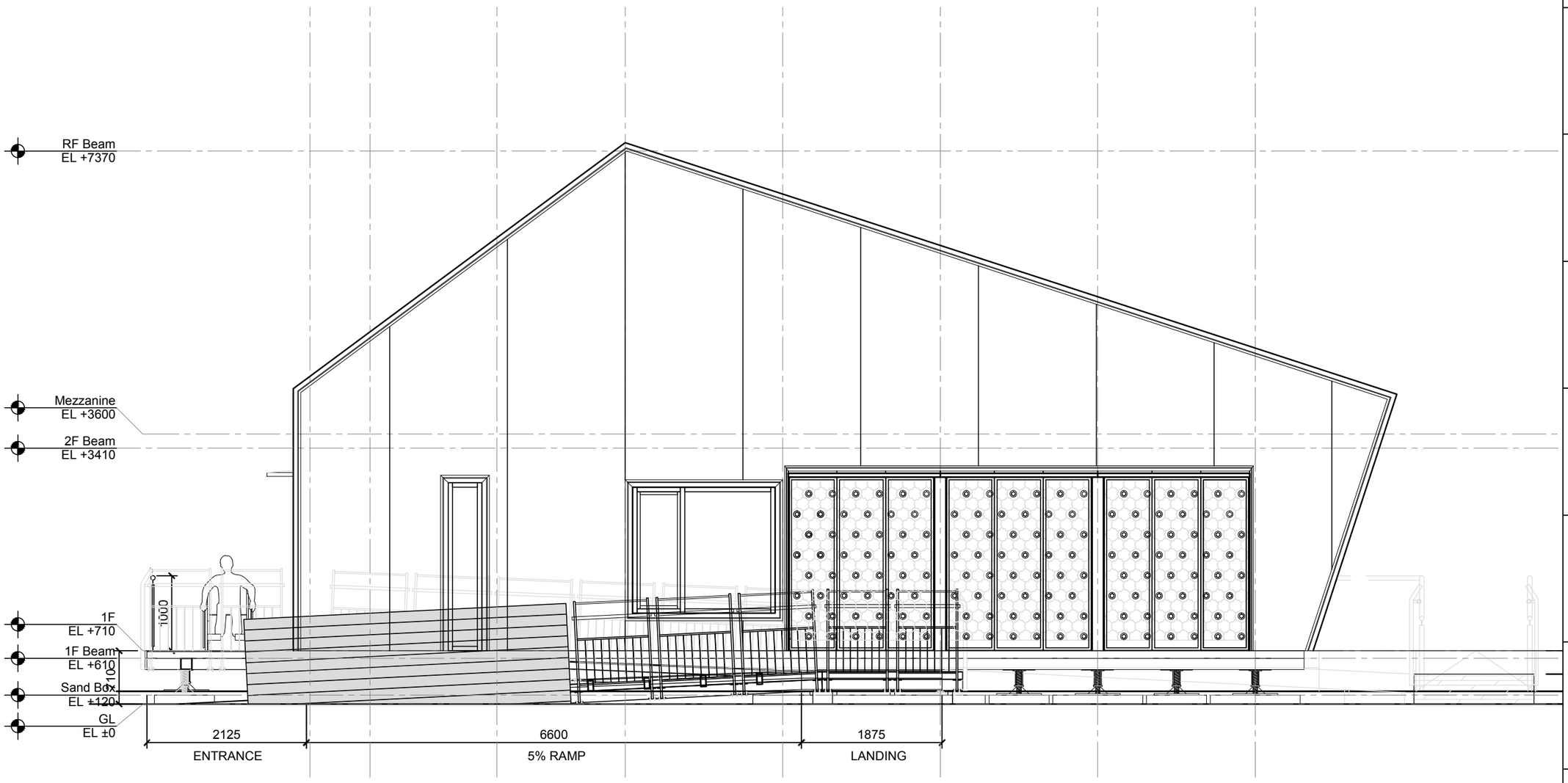

Solar Decathlon Europe

Project:

ORCHID HOUSE

Institution:

國立交通大學 National Chiao Tung University

NCTU Architecture
國立交通大學建築研究所

Team Name: NCTU/UNICODE

Address: 1001 Ta-Hsueh Road
Hsinchu City 30010
Taiwan

Contact: www.sde.tw

Consultants:

Note:

Mark	Date	Description
DN	2013/04/01	SD Submission
DN	2013/07/01	DDc Submission
ST	2013/11/01	DD Submission
ST	2014/03/03	CD Submission
ST	2014/04/30	CD Submission
ST	2014/06/02	CD Submission

Drawn by	DN
Checked by	DN
Scale	1:60
Unit	mm

DWG. Title

SITE ACCESSIBILITY ELEVATION

DWG. No. PT-002

PAGE 326

FIRST IMPRESSION (Depends on the visitors in queue)

At the beginning of the west ramp

1. We will offer a tour brochure to each visitors.
2. We will ask visitors connect to our tour website from mobile devices

PHOTOSHOT (1 MIN)

Experience the northwest side of Orchid house.

1. 10 visitors will assigned a guide from Unicode Team.
2. Guide will explain the concept, design and background knowledge of Orchid house and the city issue in Taipei. Friendly guide will start the tour from this spot, introducing the concept of Orchid House.

BATHROOM & KITCHEN (2 MINS)

Taiwanese people are hospitable and kind. The kitchen serves a multifunctional task - the center piece is an island that can be converted into a dining table for formal occasions.

LIVING ROOM & THERMAL MASS (3 MINS)

1. The Living Room features abundant natural light and can be filtered and adjusted by louvers.
2. Taiwan is a recycle kingdom. Thermal mass is made by recycled bottles.
3. Explain how the thermal wall conserves energy and maintains comfortable temperatures both day and night.

FEEDBACK & GET THE VOTE CARD (30 SECS)

Get more Q&A before finishing the tour and get a vote card.

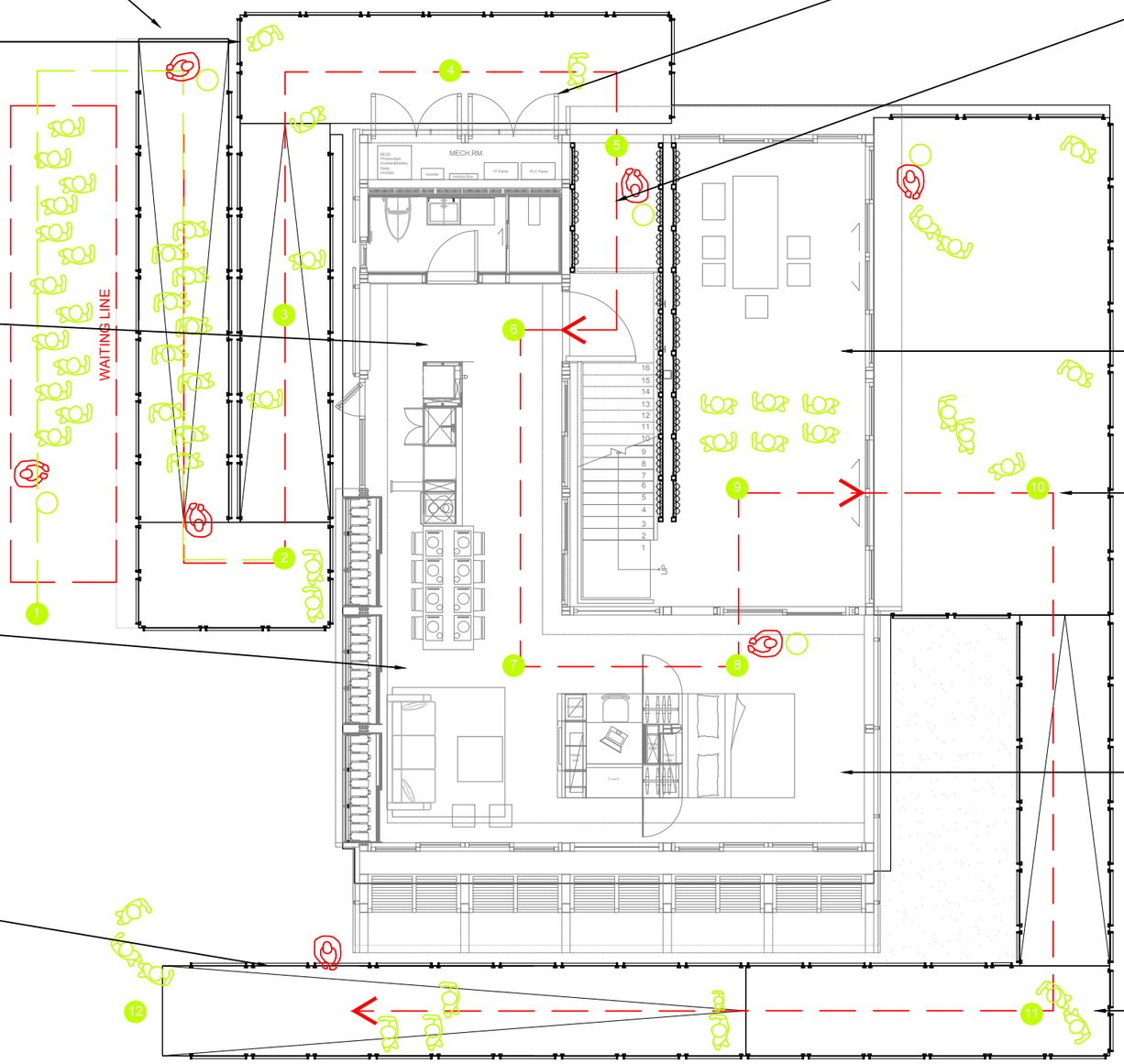

MECHANICAL ROOM (1 MIN)

Guide will explain the mechanical system including.

ENTRANCE & GREEN CORE (5 MINS)

Guide will introduce the concept of "The Green Core of Orchid House", "The Green Core of City- Orchid House" and Taiwanese orchid.

TEA TERRACE & PHOTOSHOT (5 MINS)

The space offers visitors shading comfort while they play chess and appreciating the conceptual model from the winter camp made by the senior high schoolers.

PHOTOSHOT 2 (5 MINS)

After experiencing the tea terrace, guide will make a conclusion for visitors. Also give them our three keywords: "Green Core", "Blue Sky" and "Power House".

BEDROOM & WORKSTATION (1 MIN)

Guide will explain how we conceived the L-shape house and how it serves as a prototypical solution to Taipei rooftop. Some general description of city issues will be provided.

PHOTOSHOT 3(2 mins)

Experience the southeast side of the house, seeing the well-designed garden. .

0 1 2 5 METER

Solar Decathlon Europe

Project: ORCHID HOUSE

Institution: 國立交通大學 National Chiao Tung University

NCTU Architecture 國立交通大學建築研究所

Team Name: NCTU/UNICODE

Address: 1001 Ta-Hsueh Road Hsinchu City 30010 Taiwan

Contact: www.sde.tw

Consultants:

Note:

N

Mark	Date	Description
DN	2013/04/01	SD Submission
DN	2013/07/01	DDc Submission
ST	2013/11/01	DD Submission
ST	2014/03/03	CD Submission
ST	2014/04/30	CD Submission
ST	2014/06/02	CD Submission

Drawn by	RT
Checked by	DN
Scale	1:100
Unit	mm

DWG. Title: HOUSE TOUR PLAN

DWG. No. PT-101

PAGE 327

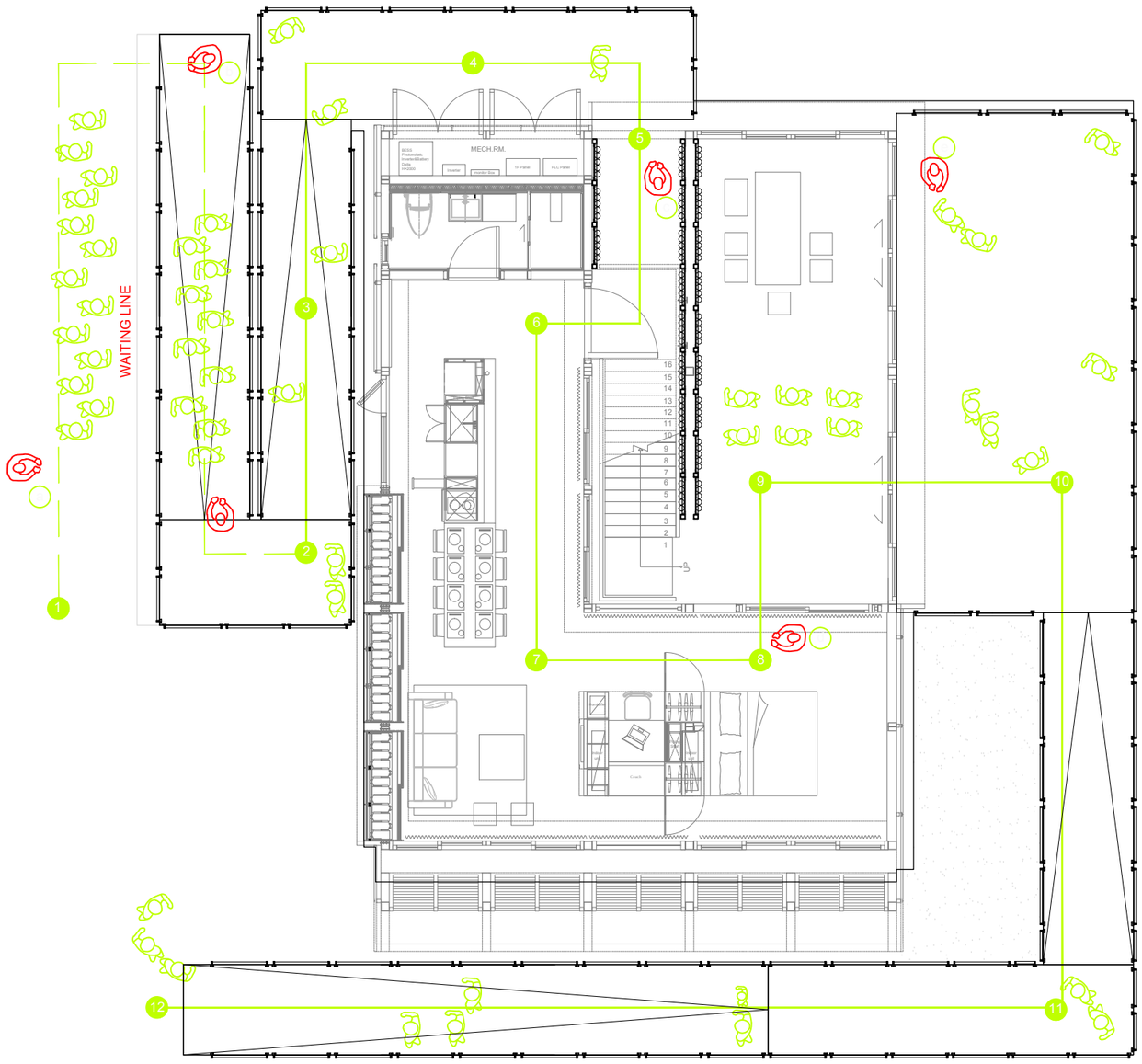

VISITOR

TEAM UNICODE MEMBER

TEAM UNICODE MEMBER(keep order the line)

TEAM UNICODE MEMBER(distribute the brochure)

TEAM UNICODE MEMBER(introduce green core)

TEAM UNICODE MEMBER(introduce living room)

TEAM UNICODE MEMBER(stand outside the terrace)

1 FIRST IMPRESSION (depends on the visitors in queue)

2 FIRST GLIMPSE (10 secs)

3 PHOTOSHOT 1 (1 min)

4 MECHANICAL ROOM (1 min)

5 ENTRANCE & GREEN CORE (5 mins)

6 BATHROOM & KITCHEN (2 mins)

7 LIVING ROOM & THERMAL MASS (3mins)

8 BEDROOM & WORKSTATION (1 min)

9 TEA TERRACE (5 mins)

10 PHOTOSHOT 2 (5 mins)

11 PHOTOSHOT 3 (2 mins)

12 FEEDBACK & GET THE VOTE CARD (30 secs)

0 1 2 5 METER

Solar Decathlon Europe

Project: ORCHID HOUSE

Institution: 國立交通大學 National Chiao Tung University

NCTU Architecture 國立交通大學建築研究所

Team Name: NCTU/UNICODE

Address: 1001 Ta-Hsueh Road
Hsinchu City 30010
Taiwan

Contact: www.sde.tw

Consultants:

Note:

N

Mark	Date	Description
DN	2013/04/01	SD Submission
DN	2013/07/01	DDc Submission
ST	2013/11/01	DD Submission
ST	2014/03/03	CD Submission
ST	2014/04/30	CD Submission
ST	2014/06/02	CD Submission

Drawn by	RT
Checked by	DN
Scale	1:100
Unit	MM

DWG. Title

HOUSE TOUR GENERAL INFORMATION

DWG. No. PT-201

PAGE 328